UNION

RAILWAY SIGNAL EQUIPMENT

UNION SWITCH & SIGNAL

DIVISION OF WESTINGHOUSE AIR BRAKE COMPANY

SWISSVALE • PENNSYLVANIA

TABLE OF CONTENTS

	Plate
Arrester, Lightning, Style USG	P1-5
Base and Junction Box, Combined	L3-51 and L3-52
Boxes, Junction	
Pedestal Mounted	L3-1 to L3-5
Combined Base and Junction Box	L3-51 and L3-52
For Mounting on Socket Base of 6" Pipe Post	L3-101
For mounting on 3" to 8" Pipe Posts	L3-151
Cases, Instrument	
Style RS Sheet Steel	L2-1
Style S, 17-1/2" Sheet Steel	L2-2
Style S, 17-1/2" Sheet Steel with 3" Pipe Post	L2-5
Circuit Controller, Style U-5 Switch	J1-1
Dragging Equipment Detector, Style SRD-5	C5-1
Foundation Piers, Cast Iron, for Cases and Houses	P7-1
Highway Crossing Signals	K1-1
Houses, Instrument, Style HM Sheet Steel	L1-1
Instrument Cases - see Cases, Instrument	
Instrument Houses, Style HM Sheet Steel	L1-1
Junction Boxes - see Boxes, Junction	
Lightning Arrester, Style USG	P1-5
Piers, Cast Iron Foundation, for Cases and Houses	P7-1
Plug Couplers for DN-11 Relays	E1-9
Relays, D.C., Wall or Shelf mounted	
DN-11 Neutral	E1-1
DN-11B Biased Neutral	E1-3
DN-11P Power Transfer	E1-5
DN-18, DN-18A and DN-19 Neutral	E1-10

May, 1961

UNION SWITCH & SIGNAL
DIVISION OF WESTINGHOUSE AIR BRAKE COMPANY
SWISSVALE, PENNSYLVANIA

TABLE OF CONTENTS (cont'd.)

	Plate
DN-22 and DN-22A Neutral	E1-20
DN-22B and DN-22BH Biased	E1-22
DN-22P Power Transfer	E1-24
DN-26 Retained-Neutral Neutral	E1-30
DP-14 Polarized	E1-1000
DP-17 and DP-17A Polarized	E1-1007
DP-20 and DP-21 Retained-Neutral Polarized	E1-1010
FN-27 Flasher	E1-2005
Relays, D.C. Plug-In Type	
PN-150B, PN-150BSR, PN-150HD Neutral	E3-3
PN-150N Neutral	E3-4
PN-150BD Biased Three Position	E3-5
PN-150P Power Transfer	E3-6
PN-150BL Light-Out Biased Neutral	E3-7
PP-151 Magnetic Stick	E3-1000
RD Polar	E12-1000
Rods and Spring Type Socket Connections for Switch Circuit Controllers	J1-100
Shelf Mounting Brackets for Plug-In Relays	E3-9500

May, 1961

UNION SWITCH & SIGNAL
DIVISION OF WESTINGHOUSE AIR BRAKE COMPANY
SWISSVALE, PENNSYLVANIA

INTRODUCTION

This Equipment Catalog lists system components produced by the Union Switch & Signal Division of Westinghouse Air Brake Company for the railway signal industry, and gives a complete breakdown of repair and replacement parts for each of these components. This catalog supplements and eventually will obsolete all previous catalogs. Individual catalog plates are prepared in loose-leaf form, making it possible to issue new plates individually or in groups, as they become available. New equipment items will have priority in the preparation of new catalog plates; however, all plates from previous catalogs will also be reviewed. These will be revised and reissued if the item covered is still active, or eliminated if the item has become obsolete. With each shipment of new catalog plates, you will be notified to destroy any old catalog plates that no longer apply.

This catalog is being prepared in accordance with our standardization program. All listed items are identified by a piece number and are considered standard stock items. This will permit you to select items which will insure the lowest price and best delivery schedule. Minor deviations of listed standard items, tailored to a particular customer's specific requirements, will be made up on special order; however, this will involve higher handling costs and possible delays in delivery.

The format of the catalog has been changed in several respects to make it easier to use:

1. The page size has been increased to 8-1/2 x 11 inches permitting the use of larger illustrations to show detail parts.
2. A "Used On" column has been added to show which detail parts are applicable to a particular main assembly.
3. Column indentations are used to show detail parts of assemblies or subassemblies; i.e., details of an assembly are listed immediately following the assembled item and indented to show that they are part of this item.
4. Each item is covered by two or more catalog plates. The first, a General Plate, gives ordering references and piece numbers to permit the selection and ordering of a complete operating unit. An associated Detail Plate or Plates, lists a breakdown of replacement parts for the complete unit.
5. Each General Plate includes a brief description of the unit covered together with pertinent facts about its application.

As in the past, each plate number includes a letter prefix. This letter establishes the classification of the equipment covered. The major classifications are as follows:

Letter Prefix	Classification
A-	Control Machines
B-	Signals
C-	Switch and Lock Machines, Layouts and Associated Ground Materials
E-	Relays, Indicators and Electric Locks
F-	Transformers, Reactors, Resistors and Impedance Bonds

J-	Circuit Controllers
K-	Highway Crossing Protective Devices
L-	Instrument Housings
N-	Automatic Train Control
P-	Accessories
R-	Car Retarder and Hump Yard Equipment
S-	Rectifiers
T-	Remote Control Equipment

Since the catalog covers components rather than systems, the former System Catalogs such as Section N for Automatic Train Control Systems, Section R for Car Retarder and Hump Yard Systems, Section T for Centralized Traffic Control Systems and Section W for Coded Track Circuit Control Systems, have been eliminated. The apparatus formerly cataloged in the System Catalogs will be incorporated in the proper sections of this catalog.

The number which immediately follows the letter prefix permits various classes of equipment in the same general category to be grouped to better advantage. This additional number also serves to identify a plate reference as coming from this catalog rather than from an older catalog.

The plate number following this letter-number prefix is a whole number for all General Plates covering complete assemblies. The plate numbers for Detail Plates are whole numbers plus decimals. The decimal system permits catalog plates of detail parts to be filed immediately after the plate showing the complete item.

All orders for complete assemblies or detail parts should include the plate number, reference, piece number and an abbreviated description of each item. This facilitates the processing of the order and serves as a cross-check against possible typographical errors resulting in numerical transpositions.

Additional loose-leaf binders will be issued as required to properly house the new catalog plates.

STYLE SRD-5 SELF-RESTORING DRAGGING EQUIPMENT DETECTOR

The Style SRD-5 Self-Restoring Dragging Equipment Detector provides a compact, integral device designed to mount directly on standard length ties. The detector is arranged to operate with traffic in either direction and provides continuous automatic protection without the need for replacing the detecting element after each operation.

The self-restoring dragging equipment detector is especially suitable for use approaching interlockings, tunnels, bridges, or other locations to detect any defective equipment that might possibly be dangling beneath cars or locomotives and might cause damage or derailment. Another important application is at car inspection pits in classification yards, where it is used to warn the inspectors of such defects on approaching cars.

Dragging equipment is detected by means of V-shaped plates mounted vertically between the rails and outside the rails for a sufficient distance to cover maximum car truck width. These plates are bolted to a substantial shaft carried by tie-mounted bearings at each end. When struck by dragging equipment, the plates are deflected (i.e., rotated) in either direction and resultant rotation of the shaft operates the circuit controller contact to set the wayside signals to warn the engineman. A spring-type restoring mechanism automatically returns both the detector plates and the circuit controller contact to their normal positions immediately after each operation, thus placing the detector in condition to check the next train.

Full contact operation is obtained with 10° to 12° deflection of the detector plates. However, in order to minimize the shock that may be transmitted to the mechanism, the detector plates are permitted to rotate well beyond this point. Under the impact of heavy blows the detector plates can be deflected a maximum of approximately 63° where they will be stopped by the corners of the ties. This arrangement not only serves to cushion the shock to the detector but also provides sufficient deflection to allow any heavy dragging equipment to slide over the plates without seriously damaging them.

Another important feature is that the torque characteristics of the detector can readily be adjusted to suit requirements of the particular installation. For main line installations it is desirable that the initial torque required to actuate the detector be relatively large, in order to eliminate improper operations by ice clinging to the cars, and also to prevent malicious or accidental operation. In other applications, such as at inspection pits in car retarder yards, a lower initial torque is employed to obtain greater sensitivity. It should be noted, however, that once the torque has been adjusted for the desired sensitivity, no further adjustment is ordinarily required.

Adjustment of the torque is made by means of the torque adjuster hub. The torque adjuster hub can be shifted to give the torque rod a definite torsional deflection, thus establishing the desired initial torque. The initial spring deflection can be varied in seven 15° steps, permitting uniform adjustments in the initial torque from a maximum of 700 inch-lbs. down to zero. The zero adjustment simplifies replacement of the torque rod, if necessary. A special socket which fits over the end of the torque rod is available to facilitate adjustment of the initial torque.

The Style SRD-5 detector is ruggedly constructed to withstand the severe conditions of shock and vibration encountered in service. All operating parts are amply protected by substantial, weatherproof housings. Resilient mountings for the bearings are utilized to minimize shock caused by passing trains. In addition, maintenance is simplified since no adjustments are normally required, refilling two grease fittings being the only attention necessary.

Since only the plates of the SRD-5 Dragging Equipment Detector project above the top of the ties, it is necessary to remove only the plates and to protect the cable to clear ballast cleaning equipment.

CONSTRUCTION

The detector plates are made from 1/8 inch spring steel, formed into an inverted "V" shape and bolted to the 3-inch pipe shaft which is carried by tie-mounted bearings. Height of the plates is such that the tops of the inner plates are approximately 1 inch below the top of the rail and the tops of the outer plates are approximately level with the top of the rail. For classification yard installations the tops of the outer plates and the tops of the two inner plates next to the rails are approximately two inches above the rails. (See View X on Plate C5-1.1). Consequently, in order to obtain these dimensions the height of the detector plates used for each installation will depend mainly on the size of the rails.

The shaft bearings are carried on substantial brackets fastened to the supporting ties by means of 3/4 inch bolts which extend horizontally through the ties. Rubber pads provide a resilient mounting for the bearings so that shock transmitted to the mechanism is reduced to a minimum. This arrangement is also advantageous in preventing the bearings from bending as a result of any tendency for the ties to shift or twist under the weight of the train. Under such conditions the resilient mountings permit the bearings to remain in alignment. Removable shims are provided with the resilient mountings to facilitate aligning the bearings at the time of installation. By transferring these shims as necessary, the bearings can be adjusted to minimize any lost motion between the fixed stops on the bearing block and the operating lugs on the detector shaft due to the sides of the supporting ties not being parallel throughout their entire length.

Oilite bushings are used in the shaft bearings and ample bearing area is provided to withstand the relatively high pressure which may develop at the bearings when the detector plates are struck by dragging equipment. Each bearing is lubricated by means of a pressure fitting conveniently located near the top of the bearing block.

The circuit controller comprises one heavy-duty silver to silver normally closed contact enclosed in a rugged housing which bolts directly to one of the bearing blocks. The circuit controller shaft is carried on substantial Oilite bushings, which simplifies lubrication. A waterproof cable fitting and two conductor #14 flexible cable approximately 6 ft. long are furnished for making circuit connections. Provision is made for applying the cable fitting to either side of the controller housing to suit installation requirements. A gasketed cover provides ready access to the circuit controller compartment for inspecting the contact assembly and circuit connections.

INSTALLATION

The Style SRD-5 detector comprises a self-contained mechanism designed for mounting on two standard 8 ft.-6 in. ties. No tie framing is needed. Tie drilling should be controlled accurately so that the

detector plates will be positioned properly with respect to the rails. Tie plates should be located to permit the detector plates, when fully deflected, to strike the corner of the tie rather than the tie plate itself.

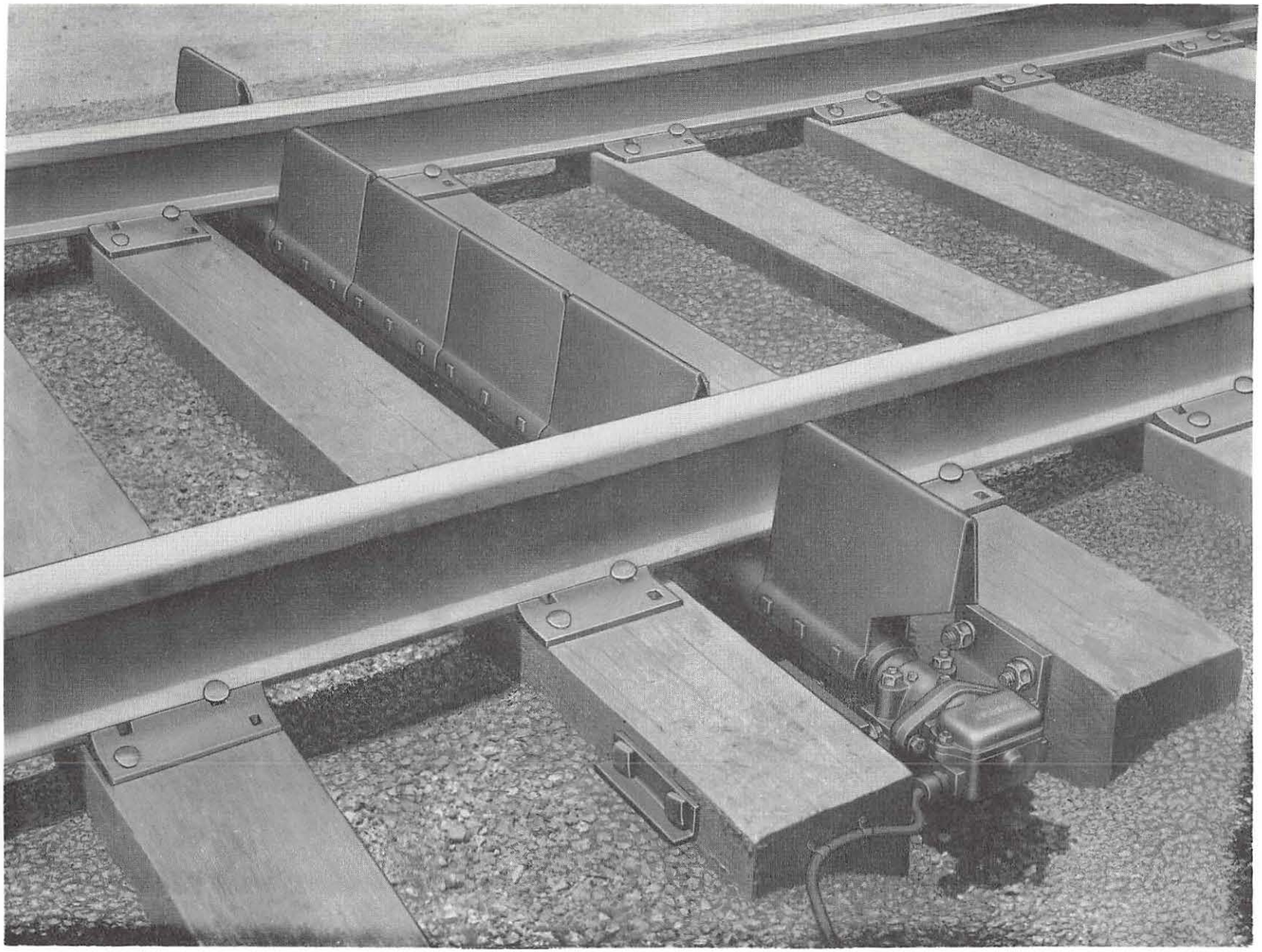

STYLE SRD-5 SELF-RESTORING

DRAGGING EQUIPMENT DETECTOR

UNION SWITCH & SIGNAL
DIVISION OF WESTINGHOUSE AIR BRAKE COMPANY

STYLE SRD-5 SELF-RESTORING DRAGGING EQUIPMENT DETECTOR

Refer to Plate C5-1.1 for Detector details and Plate C5-1.2 for Detector Mechanism details.

Order by Plate, Reference, Piece and Abbreviated Description

REF.	PIECE	DESCRIPTION	DRAWING	USED ON
A	UO289704	Style SRD-5 Self-Restoring Dragging Equipment Detector Complete. Does not include mounting hardware Refs. 10, 11, and 12 shown on Plate C5-1.1. Orders should specify rail size and thickness of tie plate	C16938-3	

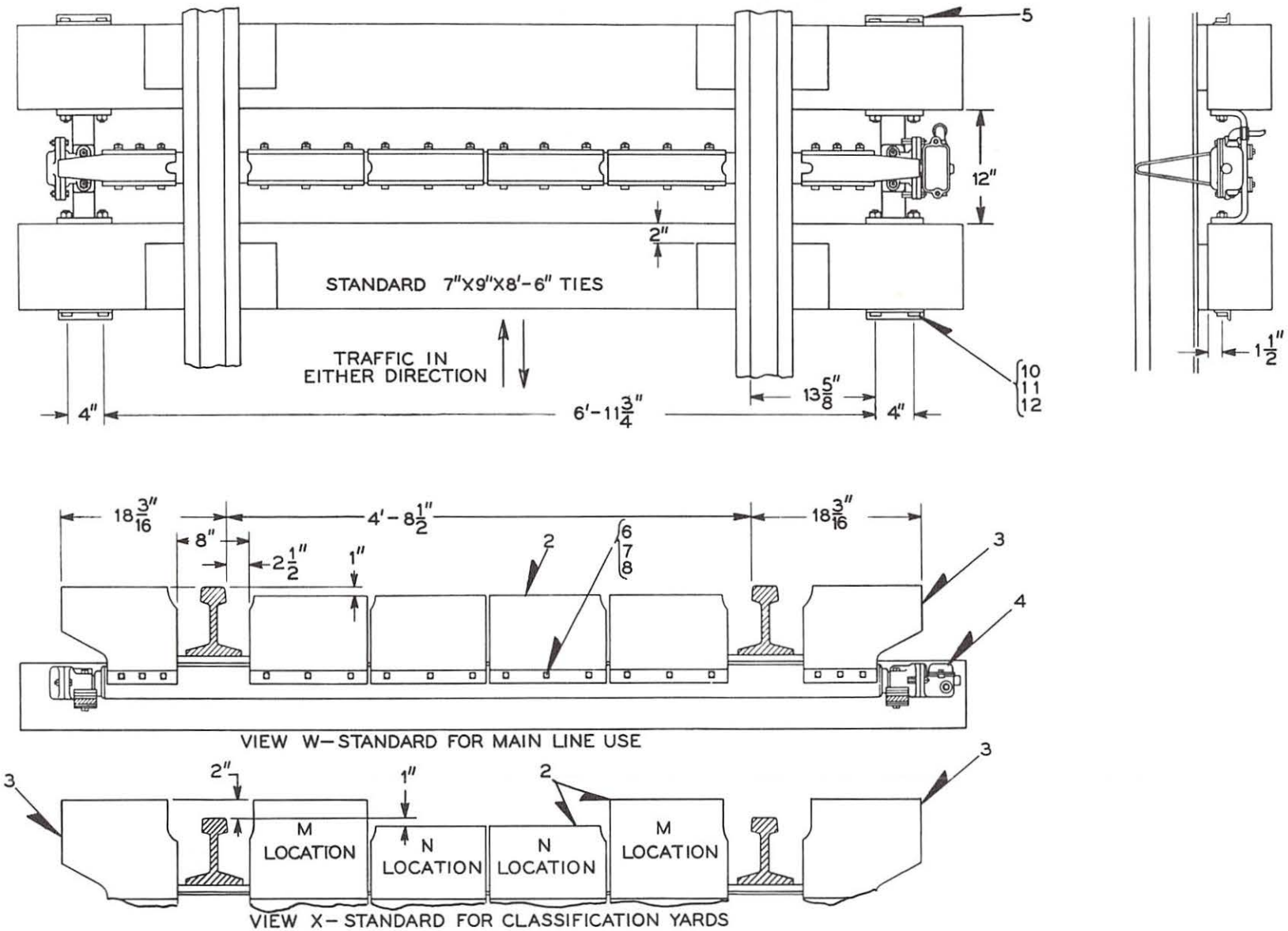

STYLE SRD-5 SELF-RESTORING

DRAGGING EQUIPMENT DETECTOR

STYLE SRD-5 SELF-RESTORING DRAGGING EQUIPMENT DETECTOR

Detail Parts

References in the "Used On" column refer to the General Plate C5-1.

Order by Plate, Reference, Piece and Abbreviated Description

REF.	PIECE	DESCRIPTION		DRAWING	USED ON
		Detector Plate for use between rails		C16937-14	
		FOR USE WITH		REMARKS	
		Rail	Tie Plate		
2	UM291338	155# P. S., 152# P. S.	7/8"	View W	A
2a	UM291339	131# P. S., 140# P. S., 131# R. E., 132# H. F., 133# R. E.	7/8", 29/32", 15/16"	View W	A
		140# P. S., 132# R. E., 129# T. R., 132# H. F.,	5/8" to 25/32"	View X "N" Location	
		131# R. E.	15/16" to 25/32"		
2b	UM311390	113# H. F.	25/32" to 7/8"	View W	A
2c	UM318277	140# P. S., 132# R. E., 129# T. R., 132# H. F., 131# R. E.	5/8" to 25/32" 15/16" to 25/32"	View X "M" Location	A
2d	UM332359	6 1/2" from top of tie to top of rail		View W	A
		100# R. E.	1/2"		
		100# R. A.	5/8"	View X "N" Location	
2e	UM332773	115# R. E., 130# P. S.	5/8" to 3/4"	View W	A
		112# R. E., 119# C. F. & I.	5/8" to 3/4"	View X "N" Location	
2f	UM333843	112# R. E., 119# C. F. & I.	5/8" to 3/4"	View X "M" Location	A
2g	UM344288	90# R. A.	5/8"	View X "M" Location	A
2h	UM344289	100# R. A.	5/8"	View X "M" Location	A
2j	UM371927	90# R. A.	5/8"	View X "N" Location	A

REF.	PIECE	DESCRIPTION		DRAWING	USED ON
		Detector Plate for use outside of rails		C16937-12	
		FOR USE WITH		REMARKS	
		Rail	Tie Plate		
3	UM291336	155# P.S., 152# P.S.	7/8"	View W	A
3a	UM291337	131# P.S., 140# P.S., 131# R.E., 132# H.F., 133# R.E.	7/8", 29/32", 15/16"	View W	A
3b	UM311389	113# H.F.	25/32" to 7/8"	View W	A
3c	UM318276	140# P.S., 132# R.E., 129# T.R., 132# H.F.	5/8" to 25/32"	View X	A
		131# R.E.	15/16" to 25/32"		
3d	UM332358	6 1/2" from top of tie to top of rail		View W	A
		100# R.E.	1/2"		
3e	UM332772	115# R.E., 130# P.S.	5/8" to 3/4"	View W	A
3f	UM333842	112# R.E., 119# C.F.&I.	5/8" to 3/4"	View X	A
3g	UM344286	90# R.A.	5/8"	View X	A
3h	UM344287	100# R.A.	5/8"	View X	A

REF.	PIECE	DESCRIPTION	DRAWING	USED ON
4	UN289703	Style SRD-5 Mechanism Complete. For details refer to Plate C5-1.2	D2614-2	A
5	UM291349	Angle Washer	B10302-2	A
6	UJ466005	Bolt, 1/2"-13 x 4-1/2" steel (Cad. Pl.).		A
7	UJ47769	Lock Washer, 1/2" steel (Cad. Pl.)		A
8	UJ48013	Hex. Nut, 1/2"-13 (Cad. Pl.)		A
9	UM295546	Torque Adjusting Socket (Not shown)	8072-1067	A
10	UJ46760	Bolt, 3/4"-10 x 11" square head steel		
11	UJ47772	Lock Washer, 3/4" steel.		
12	UJ48026	Hex. Nut, 3/4"-10 steel		

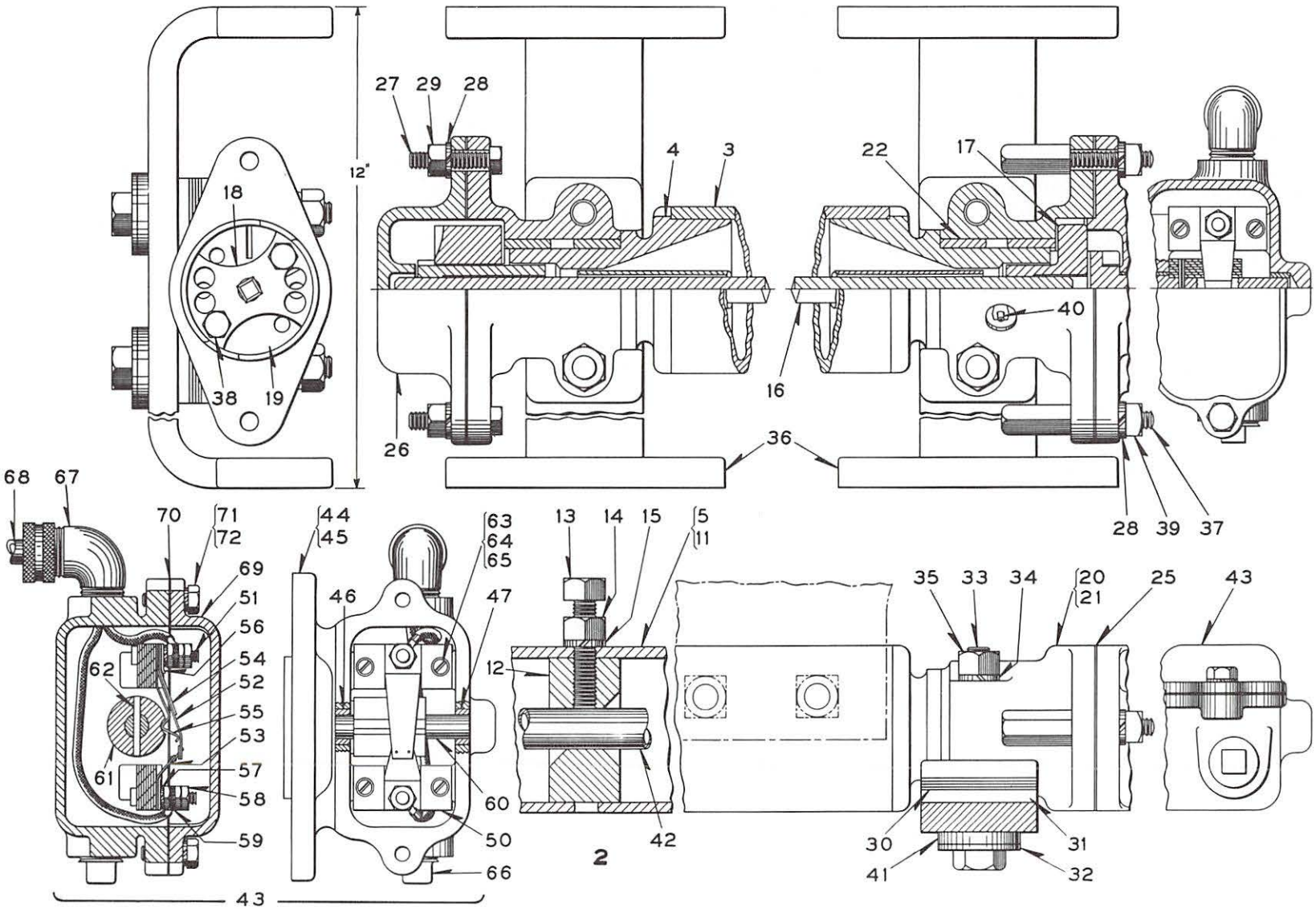

STYLE SRD-5 SELF-RESTORING

DRAGGING EQUIPMENT DETECTOR MECHANISM

STYLE SRD-5 SELF-RESTORING DRAGGING EQUIPMENT DETECTOR

Detail Parts for Detector Mechanism

Indented item descriptions indicate that the references in the "Used On" column refer to this Plate, C5-1.2. All other references refer to the General Plate C5-1.

Order by Plate, Reference, Piece and Abbreviated Description

REF.	PIECE	DESCRIPTION	DRAWING	USED ON
2	UN289703	Style SRD-5 Mechanism Complete	D2614-2	A
3	UN291343	. Detector Plate Shaft Complete	C16937-15	2
4	UM290820	. . Journal	C16937-8	3
5	UN291342	. . Detector Plate Shaft	C16937-15	3
11	UM291567	. . . Pipe	C16937-15	5
12	UM291566	. . . Collar	8072-1060	5
13	UJ46452	. . . Bolt, 1/2"-13 x 2-1/4" hex. head (Cad. Pl.)		5
14	UJ48013	. . . Hex. Nut, 1/2"-13 (Cad. Pl.)		5
15	UJ47769	. . . Lock Washer, 1/2" steel (Cad. Pl.)		5
16	UM291271	. Torque Rod	9956-133	2
17	UM291332	. Torque Rod Arm	C16937-17	2
18	UM291333	. Torque Adjuster Hub	C16937-17	2
19	UM291334	. Torque Adjuster Arm	C16937-17	2
20	UN290822	. Bearing Complete	C16937-9	2
21	UM290821	. . Bearing	C16937-9	20
22	UM291306	. . Bushing	8350-1107	20
25	UM291302	. Gasket	8078-1845	2
26	UM290826	. End Cap	C16937-11	2
27	UJ50039	. Cap Screw, 3/8"-16 x 1-3/4" hex. head		2
28	UJ47768	. Lock Washer, 3/8" steel		2
29	UJ48009	. Hex. Nut, 3/8"		2
30	UM291270	. Shim	11893-1146	2
31	UJ47918	. Rubber Pad	8078-1849	2
32	UJ47504	. Washer, 5/8" steel		2
33	UM291304	. Bolt	8277-166	2
34	UJ47769	. Lock Washer, 1/2" steel		2
35	UJ48013	. Hex. Nut, 1/2"		2
36	UM291340	. Bearing Support Bracket	C16937-13	2
37	UM295547	. Bolt	8709-77	2
38	UJ50051	. Cap Screw, 3/8"-16 x 3/4" hex. head		2

REF.	PIECE	DESCRIPTION	DRAWING	USED ON
39	UJ48227	. Nut, 3/8"		2
40	UJ39137	. Lubricating Fitting, 1/8" straight		2
41	UJ47919	. Rubber Pad	8078-1850	2
42	UM291341	. Torque Rod Guide	C16937-15	2
43	UN291347	. Circuit Controller Complete	C16937-16	2
44	UN290824	. . Housing Complete	C16937-10	43
45	UM290823	. . . Housing	C16937-10	44
46	UJ790277	. . . Bushing		44
47	UJ790276	. . . Bushing		44
50	UM291314	. . Terminal Board	9968-1464	43
51	UM122489	. . Binding Post	8094-1192	43
52	UN291310	. . Contact Spring	8385-2901	43
53	UN291308	. . Contact Spring	8385-2901	43
54	UM291311	. . Reinforcing Spring	8735-1146	43
55	UM291312	. . Contact Operating Spring	8735-1146	43
56	UM291357	. . Reinforcing Spring	8735-1147	43
57	UJ47775	. . Lock Washer, 1/4" steel (N. Pl.)		43
58	UM29103	. . Nut	8109-194	43
59	UJ47818	. . Washer	7828-139	43
60	UM291315	. . Shaft	12501-214	43
61	UM291313	. . Roller	8750-3603	43
62	UJ48714	. . Pin		43
63	UJ52353	. . Screw, No. 10-32 x 1" fil. head steel		43
64	UM248504	. . Washer (Tin Pl.)	7826-316	43
65	UJ47733	. . Lock Washer, No. 10 steel		43
66	UJ32930	. . Pipe Plug, 3/4" square head		43
67	UJ712000	. . Connector, 3/4"		43
68	UN291360	. . Cable	B9991-32	43
69	UM290825	. . Circuit Controller Cover	C16937-11	43
70	UM291346	. . Gasket	8078-1846	43
71	UJ50052	. . Screw, 3/8"-16 x 7/8" hex. head steel		43
72	UJ47779	. . Lock Washer, 3/8" steel		43

STYLE DN-11 SHELF-TYPE RELAYS

STYLE DN-11 SHELF-TYPE RELAYS

The DN-11 line of UNION shelf-type relays is a series of efficient relays with a time-proven record of reliable service in railroad line and track circuit. Relays in this line have been used to meet almost every signal circuit requirement.

When it is desired to use these relays in special circuit applications, consult our District Sales Office.

RELAY FEATURES

The most efficient relay of their type yet developed.

Provided with two coils.

Mounted on spring shock absorbers.

Easily adapted for wall mounting.

Contacts are sealed in tight clear enclosure.

Binding posts are at different levels to facilitate making connections.

Low working current means:

- Longer battery life.
- Operation of longer track circuits.
- Possible elimination of cut sections.
- Increases train shunting sensitivity when applied to existing circuits.

Compound spring contacts improve back contact performance during vibrations.

Meet AAR requirements.

CONTACTS:

Standard contacts are silver to silver-impregnated carbon front and silver to silver back. Also available are low voltage silver-impregnated carbon front and back contacts, high voltage contacts and heavy duty contacts.

Contact Capacity: 4 amperes (except DN-11P and relays with heavy duty contacts)
up to 30 volts D.C. or 175 volts A.C.

15 amperes (DN-11P and relays with heavy duty contacts)
up to 30 volts A.C. or D.C.

PLUG COUPLERS

Plug Couplers permit the removal and replacement of relays without disconnecting any wiring.

Complete units and detail parts for Plug Couplers applicable to the DN-11 relay may be found on Plate E1-9.

Height 8-5/8", Width 6-1/4", Depth 6-1/4"
STYLE DN-11 D.C. NEUTRAL RELAY, 4 POINT

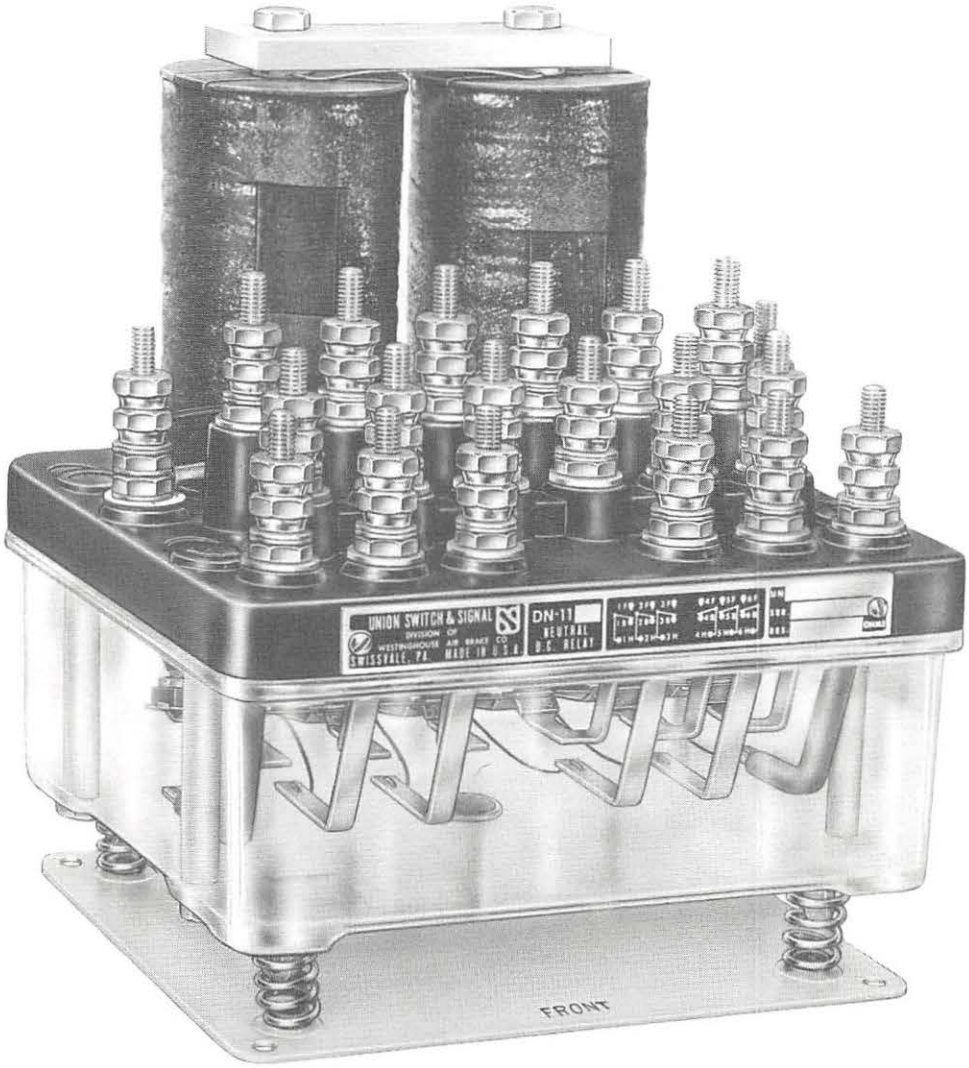

Height 8-5/8", Width 7-5/8", Depth 6-1/4"
STYLE DN-11 D.C. NEUTRAL RELAY, 6 POINT

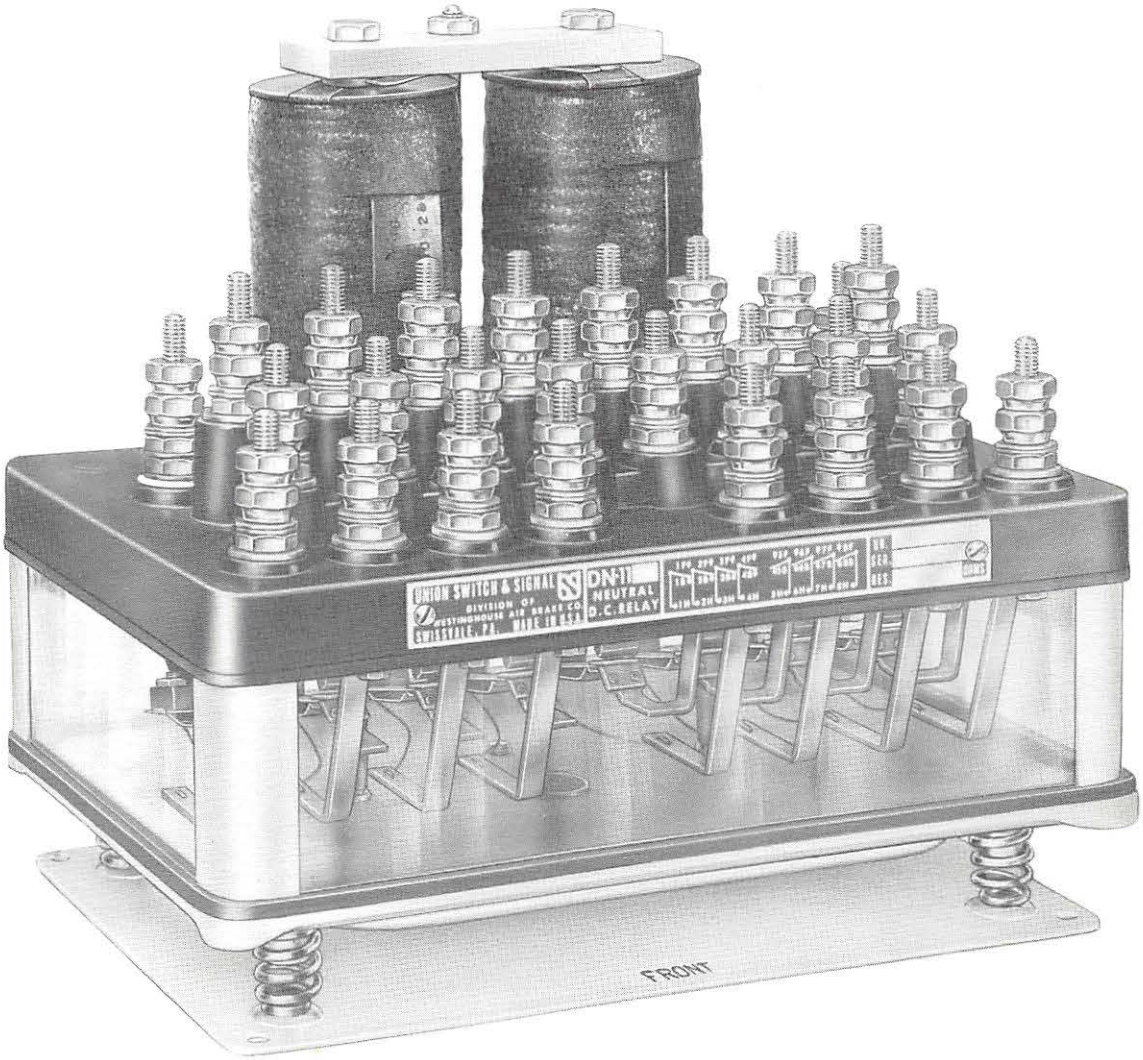

Height 8-3/8", Width 9-5/8", Depth 6-1/4'
STYLE DN-11 D.C. NEUTRAL RELAY, 8 POINT

UNION SWITCH & SIGNAL
DIVISION OF WESTINGHOUSE AIR BRAKE COMPANY

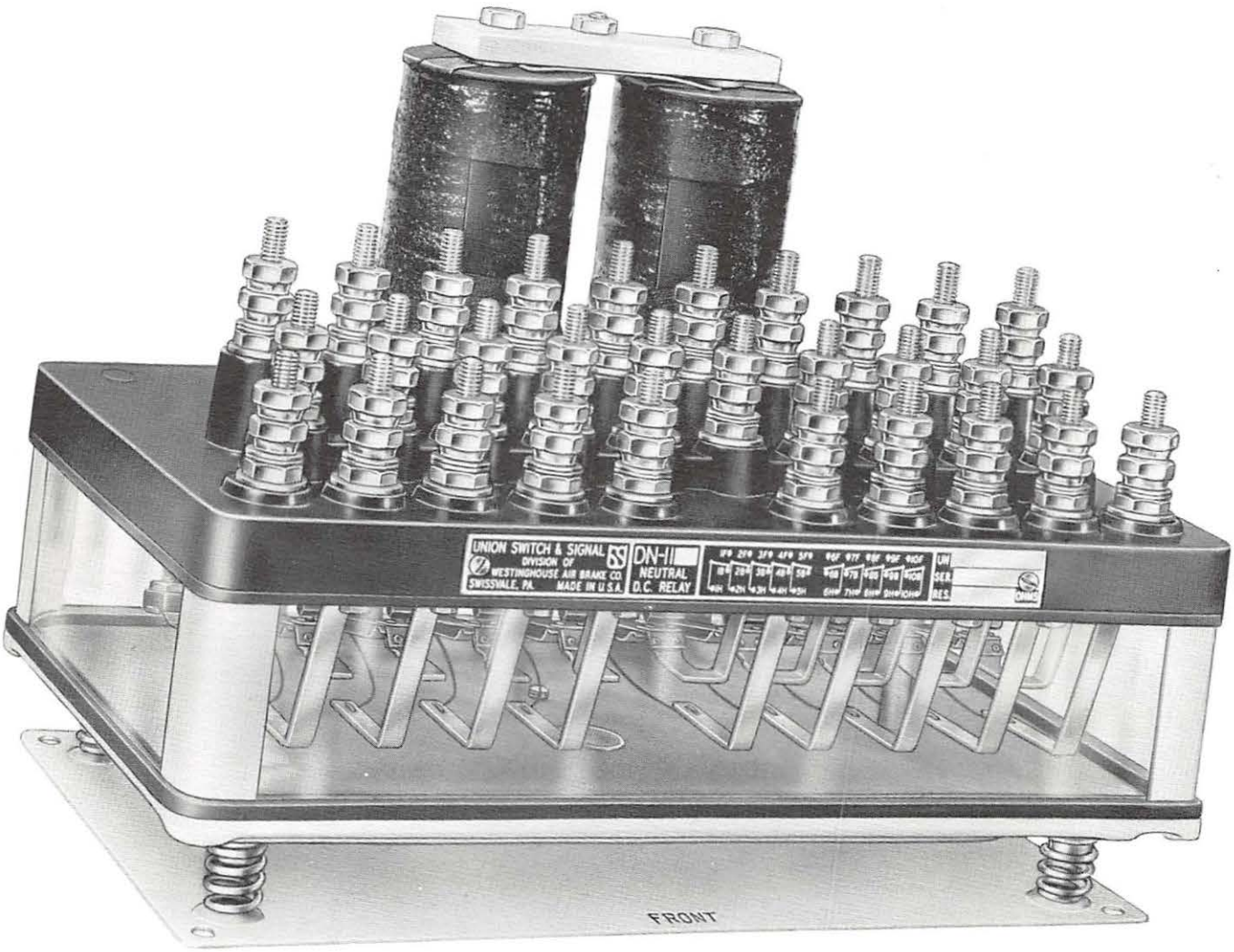

Height 8-3/8", Width 11-5/8", Depth 6-1/4"
STYLE DN-11 D.C. NEUTRAL RELAY, 10 POINT

STYLE DN-11 4-POINT D.C. NEUTRAL RELAY

Details of relays are shown on Plates E1-1.1 and E1-1.2
Refer to Plate E1-9 for Plug Couplers

Contact description:

Std. = Low voltage, silver to silver-impregnated carbon front and silver to silver back contacts.
S.I.C. = Low voltage, silver to silver-impregnated carbon front and back contacts.
H.D. = Low voltage, heavy duty (15 amp. capacity) silver to silver-impregnated carbon front and silver to silver back contacts.
H.V. = High voltage, silver-impregnated carbon to silver-impregnated carbon front and back contacts.

Order by Plate, Reference, Piece and Abbreviated Description

4 Point Style DN-11 ordinary acting D.C. neutral relay with low voltage contacts					
Ref.	Piece	Resistance of Relay-Ohms	Contacts	Remarks	Drawing
A	UN163068	0.5	4F-4B Std.		C9077-56
Aa	UN212441	1	4F-4B Std.		C9077-103
Ab	UN152232	2	4F-4B Std.		C9077-24
Ac	UN150956	4	4F-4B Std.		C9077-24
Ad	UN163574	16	4F-4B Std.		C9077-56
Ae	UN312480	30	4F-4B Std.		C9077-103A
Af	UN213536	55	4F-4B Std.		C9077-103
Ag	UN159679	60	4F-4B Std.		C9077-24
Ah	UN161997	100	4F-4B Std.		C9077-56
Aj	UN159996	250	4F-4B Std.		C9077-24
Ak	UN157285	500	4F-4B Std.		C9077-24
Am	UN157282	670	4F-4B Std.		C9077-24
An	UN157187	1000	4F-4B Std.		C9077-24
Ap	UN161396	1500	4F-4B Std.		C9077-24
Aq	UN157189	2000	4F-4B Std.		C9077-24
B	UN338950	1	4F-4B S.I.C.		C9077-24
Ba	UN178026	4	4F-4B S.I.C.		C9077-56
Bb	UN209259	16	4F-4B S.I.C.		C9077-56
Bc	UN188688	55	4F-4B S.I.C.		C9077-24
Bd	UN211300	250	4F-4B S.I.C.		C9077-103
Be	UN163751	500	4F-4B S.I.C.		C9077-56
Bf	UN190542	1000	4F-4B S.I.C.		C9077-24

4 Point Style DN-11 ordinary acting D.C. neutral relay with low voltage contacts

Ref.	Piece	Resistance of Relay-Ohms	Contacts	Remarks	Drawing
C	UN214333	500	4F-4B H.D.		C9077-103
Ca	UN299581	500	2F-2B Std. 2F-2B H.D.		C9077-103A
Cb	UN231336	500	4F-2B Std. 2B H.D.		C9077-103A
Cc	UN213667	670	4F-4B H.D.		C9077-103
Cd	UN214494	1000	4F-4B H.D.		C9077-103
Ce	UN255896	1000	2F-2B Std. 2F-2B H.D.		C9077-24
Cf	UN214711	1000	4F-2B Std. 2B H.D.		C9077-103

4 Point Style DN-11 ordinary acting D.C. neutral relay with high voltage contacts

Ref.	Piece	Resistance of Relay-Ohms	Contacts	Remarks	Drawing
D	UN167601	4	4F-4B H.V.		C9077-56
Da	UN173969	250	4F-4B H.V.		C9077-56
Db	UN164565	500	4F-4B H.V.		C9077-56
Dc	UN157172	1000	4F-4B H.V.		C9077-24
Dd	UN174015	1500	4F-4B H.V.		C9077-56

4 Point Style DN-11 slow drop-away D.C. neutral relay with low voltage contacts

Ref.	Piece	Resistance of Relay-Ohms	Contacts	Remarks	Drawing
E	UN198488	4	4F-4B Std.		C9077-24
Ea	UN206470	40	4F-4B Std.		C9077-56
Eb	UN157289	100	4F-4B Std.		C9077-24
Ec	UN166979	250	4F-4B Std.		C9077-56
Ed	UN157284	400	4F-4B Std.		C9077-24
Ee	UN157188	500	4F-4B Std.		C9077-24
F	UN199523	400	4F-4B S.I.C.		C9077-24
Fa	UN239079	500	4F-4B S.I.C.		C9077-103A
G	UN320743	500	4F-2B Std. 2B H.D.		C9077-24

STYLE DN-11 6-POINT D.C. NEUTRAL RELAY

Details of relays are shown on Plates E1-1.1 and E1-1.2
Refer to Plate E1-9 for Plug Couplers

Contact description:

Std. = Low voltage, silver to silver-impregnated carbon front and silver to silver back contacts.
S.I.C. = Low voltage, silver to silver-impregnated carbon front and back contacts.
H.D. = Low voltage, heavy duty (15 amp. capacity) silver to silver-impregnated carbon front and silver to silver back contacts.
H.V. = High voltage, silver-impregnated carbon to silver-impregnated carbon front and back contacts.

Order by Plate, Reference, Piece and Abbreviated Description

6 Point Style DN-11 ordinary acting D.C. neutral relay with low voltage contacts					
Ref.	Piece	Resistance of Relay-Ohms	Contacts	Remarks	Drawing
H	UN299452	0.5	6F-6B Std.		C9077-106A
Ha	UN239335	1	6F-6B Std.		C9077-106
Hb	UN161744	2	6F-6B Std.		C9077-15
Hc	UN145365	4	6F-2B Std.		C9077-15
Hd	UN142676	4	6F-6B Std.		C9077-15
He	UN166250	100	6F-6B Std.		C9077-15
Hf	UN166906	250	6F-6B Std.		C9077-15
Hg	UN163010	500	6F-2B Std.		C9077-15
Hh	UN159871	500	6F-6B Std.		C9077-15
Hj	UN159864	670	6F-6B Std.		C9077-15
Hk	UN157602	1000	6F-2B Std.		C9077-15
Hm	UN158263	1000	6F-6B Std.		C9077-15
Hn	UN166398	1500	6F-6B Std.		C9077-15
J	UN217661	500	6F-6B S.I.C.		C9077-106
Ja	UN160025	1000	6F-6B S.I.C.		C9077-15
K	UN262423	500	2F-2B Std. 4F-4B H.D.		C9077-106
Ka	UN296502	1000	2F-2B Std. 2F Ind. H.D. 2B Ind. H.D.		C9077-106

6 Point Style DN-11 ordinary acting D.C. neutral relay with high voltage contacts					
Ref.	Piece	Resistance of Relay-Ohms	Contacts	Remarks	Drawing
L	UN199454	500	6F-6B H.V.		C9077-15
La	UN163573	1000	6F-6B H.V.		C9077-15

6 Point Style DN-11 slow drop-away D.C. neutral relay with low voltage contacts					
Ref.	Piece	Resistance of Relay-Ohms	Contacts	Remarks	Drawing
M	UN177426	100	6F-6B Std.		C9077-64
Ma	UN168245	250	6F-6B Std.		C9077-15
Mb	UN159553	400	6F-6B Std.		C9077-15
Mc	UN173931	500	6F-6B Std.		C9077-64
N	UN211435	500	6F-6B S.I.C.		C9077-64

STYLE DN-11 8-POINT D.C. NEUTRAL RELAY

Details of relays are shown on Plates E1-1.1 and E1-1.2
Refer to Plate E1-9 for Plug Couplers

Contact description:

Std. = Low voltage, silver to silver-impregnated carbon front and silver to silver back contacts.
S.I.C. = Low voltage, silver to silver-impregnated carbon front and back contacts.
H.D. = Low voltage, heavy duty (15 amp. capacity) silver to silver-impregnated carbon front and silver to silver back contacts.
H.V. = High voltage, silver-impregnated carbon to silver-impregnated carbon front and back contacts.

Order by Plate, Reference, Piece and Abbreviated Description

8 Point Style DN-11 ordinary acting D.C. neutral relay with low voltage contacts

Ref.	Piece	Resistance of Relay-Ohms	Contacts	Remarks	Drawing
P	UN164519	4	8F-2B Std.		C9077-48
Pa	UN161945	4	8F-8B Std.		C9077-48
Pb	UN226267	250	8F-8B Std.		C9077-48
Pc	UN166013	500	8F-2B Std.		C9077-48
Pd	UN174666	500	8F-6B Std.		C9077-48
Pe	UN159870	500	8F-8B Std.		C9077-48
Pf	UN185811	670	8F-6B Std.		C9077-48
Pg	UN157353	670	8F-8B Std.		C9077-48
Ph	UN157568	1000	8F-2B Std.		C9077-48
Pj	UN161333	1000	8F-8B Std.		C9077-48
R	UN237154	500	8F-8B S.I.C.		C9077-48
Ra	UN172734	1000	8F-8B S.I.C.		C9077-48

8 Point Style DN-11 slow drop-away D.C. neutral relay with low voltage contacts

Ref.	Piece	Resistance of Relay-Ohms	Contacts	Remarks	Drawing
S	UN237821	200	8F-8B Std.		C9077-48
Sa	UN208228	250	8F-8B Std.		C9077-48
Sb	UN162405	500	8F-8B Std.		C9077-48

STYLE DN-11 10-POINT D.C. NEUTRAL RELAY

Details of relays are shown on Plates E1-1.1 and E1-1.2
Refer to Plate E1-9 for Plug Couplers

Contact description:

Std. = Low voltage, silver to silver-impregnated carbon front and silver to silver back contacts.
S.I.C. = Low voltage, silver to silver-impregnated carbon front and back contacts.
H.D. = Low voltage, heavy duty (15 amp. capacity) silver to silver-impregnated carbon front and silver to silver back contacts.
H.V. = High voltage, silver-impregnated carbon to silver-impregnated carbon front and back contacts.

Order by Plate, Reference, Piece and Abbreviated Description

10 Point Style DN-11 ordinary acting D.C. neutral relay with low voltage contacts					
Ref.	Piece	Resistance of Relay-Ohms	Contacts	Remarks	Drawing
T	UN226266	250	10F-10B Std.		C9077-51
Ta	UN177313	500	10F-4B Std.		C9077-51
Tb	UN173638	500	10F-10B Std.		C9077-51
Tc	UN157312	670	10F-10B Std.		C9077-51
Td	UN163251	1000	10F-10B Std.		C9077-51
U	UN330469	500	10F-10B S.I.C.		C9077-51

10 Point Style DN-11 ordinary acting D.C. neutral relay with high voltage contacts					
Ref.	Piece	Resistance of Relay-Ohms	Contacts	Remarks	Drawing
V	UN211577	500	10F-4B H.V.		C9077-51

10 Point Style DN-11 slow drop-away D.C. neutral relay with low voltage contacts					
Ref.	Piece	Resistance of Relay-Ohms	Contacts	Remarks	Drawing
W	UN166345	250	10F-10B Std.		C9077-51

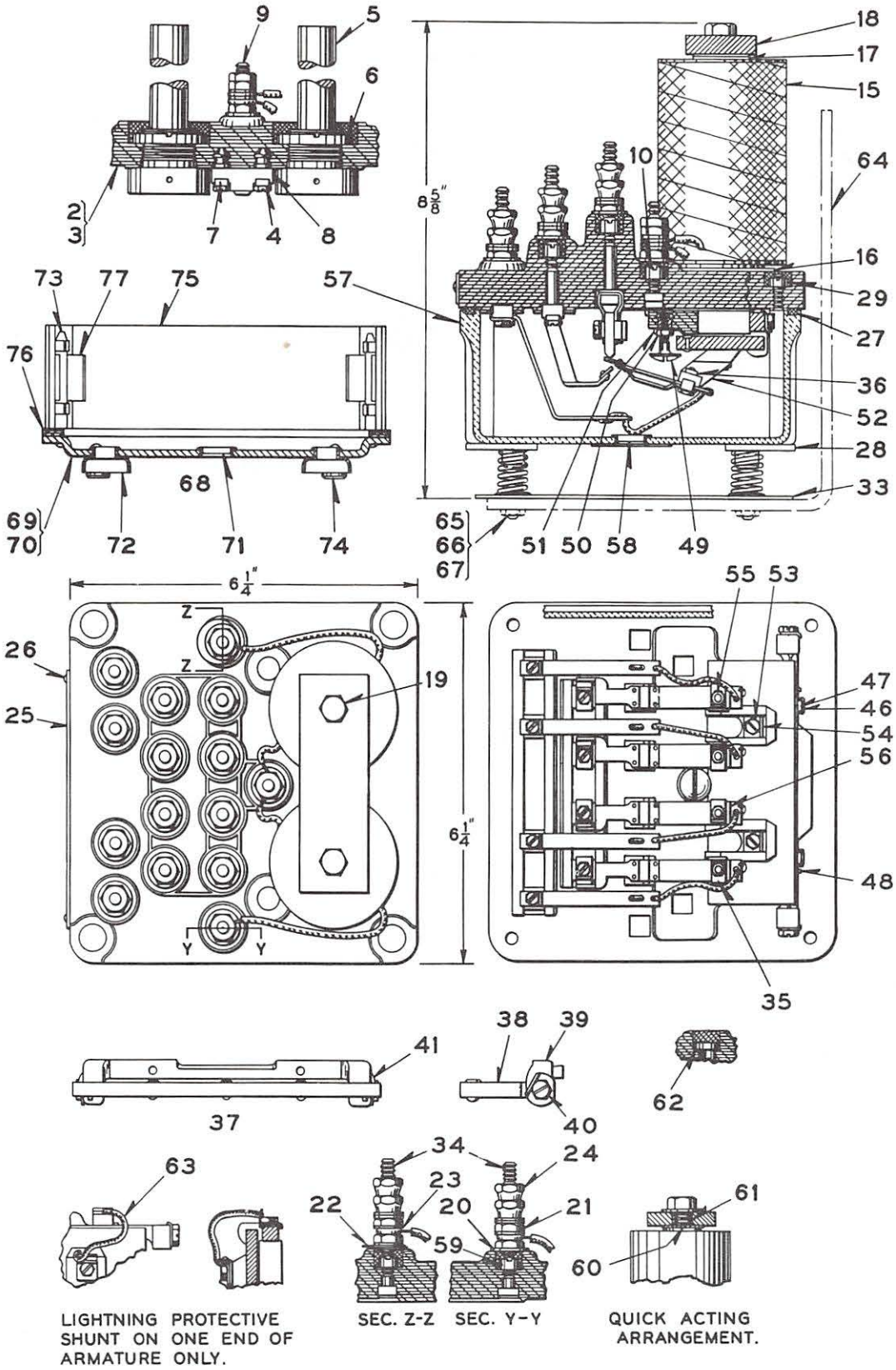

STYLE DN-11 4 POINT D.C. NEUTRAL RELAY

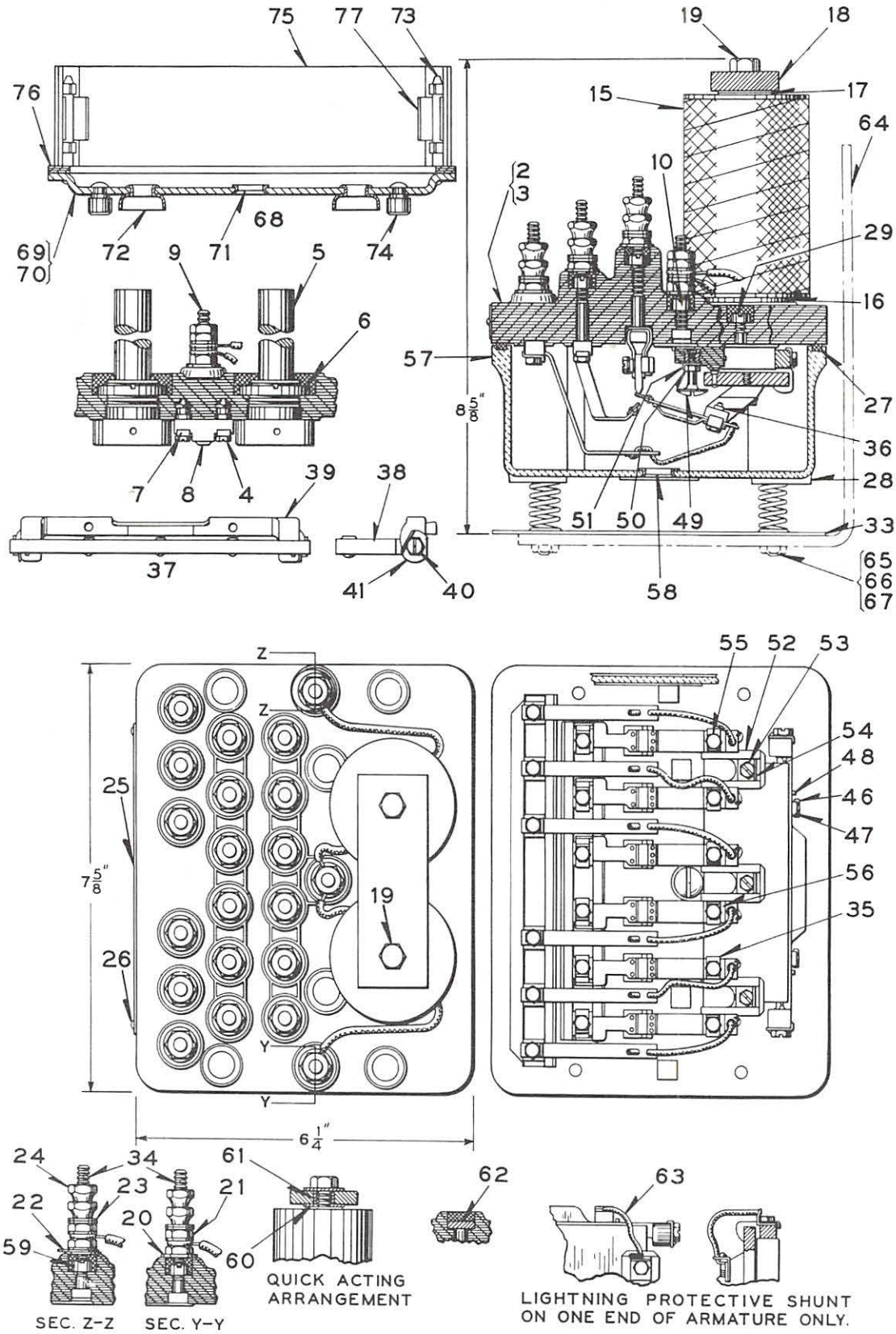

STYLE DN-11 6 POINT D.C. NEUTRAL RELAY

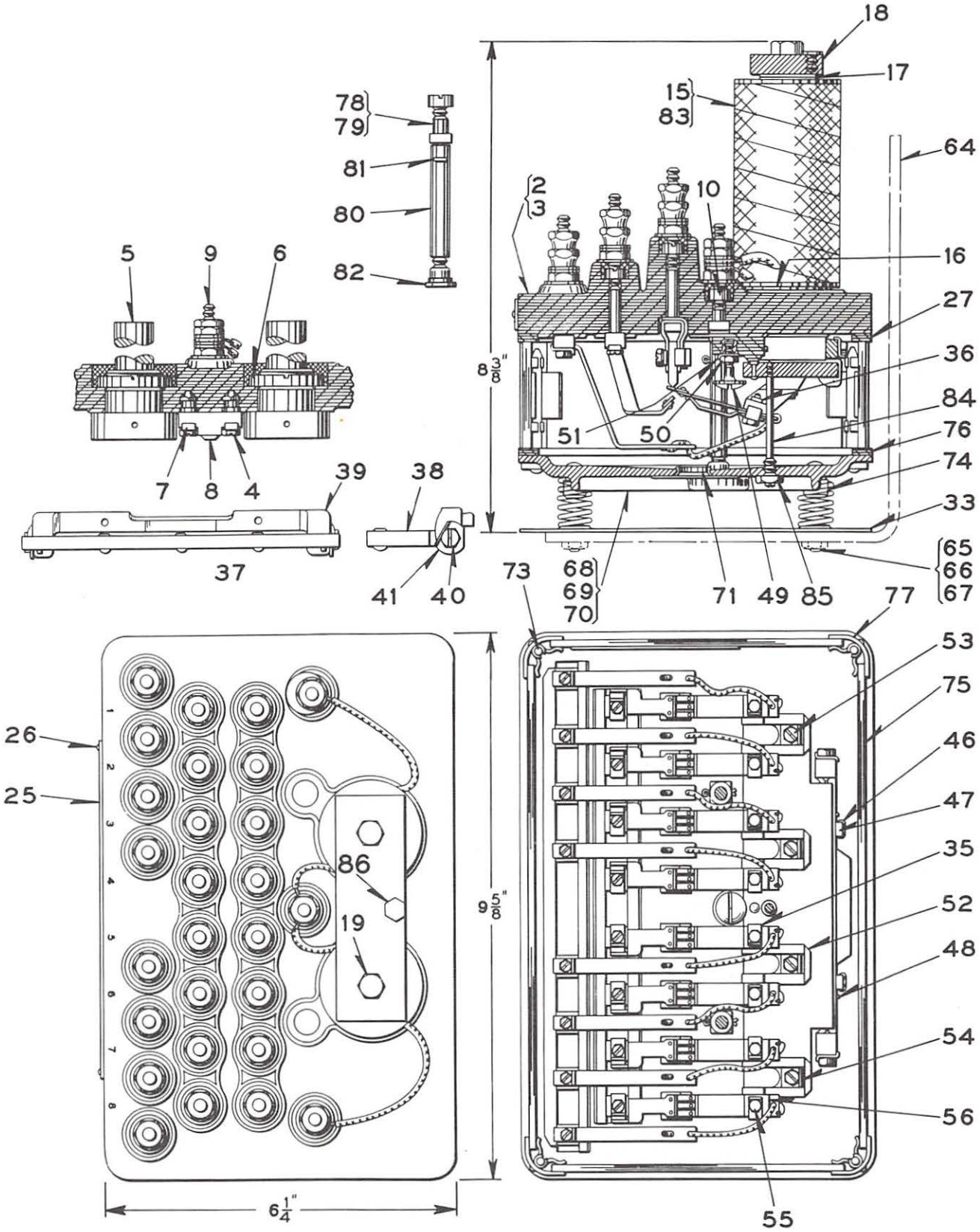

STYLE DN-11 8 POINT D.C. NEUTRAL RELAY

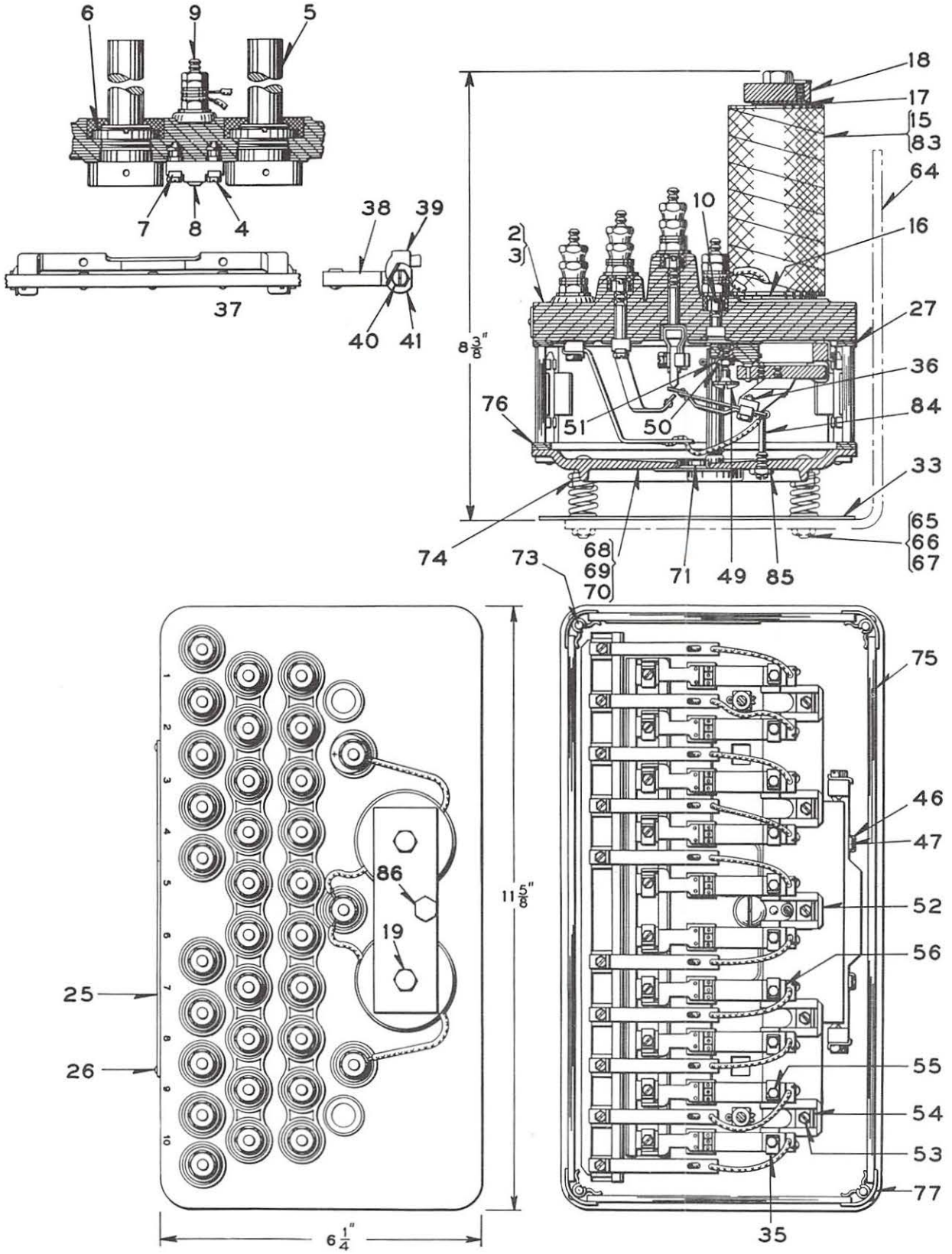

STYLE DN-11 10 POINT D.C. NEUTRAL RELAY

STYLE DN-11 4,6,8,10-POINT D.C. NEUTRAL RELAYS

Detail Parts

Indented item descriptions indicate that the references in the "Used On" column refer to this Plate, E1-1.1. All other references refer to the General Plate E1-1. When an asterisk (*) appears in the "Used On" column it indicates that these components are used on special purpose DN-11 relays which are not listed with the standard relays appearing on the General Plate E1-1. For detail parts of Contact Spring Combinations see Plate E1-1.2.

Order by Plate, Reference, Piece and Abbreviated Description

REF.	PIECE	DESCRIPTION	DRAWING	USED ON
2	UN149185	Top Plate Complete (4 point relays)	C9078-7	A to G
2a	UN142660	Top Plate Complete (6 point relays)	C9078-7	H to N
2b	UN155486	Top Plate Complete (8 point relays)	C9078-7	P to Sb
2c	UN156803	Top Plate Complete (10 point relays)	C9078-7	T to W
3	UN156889	. Top Plate	C9078-13	2
3a	UN156887	. Top Plate	C9078-9	2a
3b	UN156886	. Top Plate	C9078-8	2b
3c	UN156888	. Top Plate	C9078-11	2c
4	UM142673	. . Screw	8098-1300	3, 3a, 3b 3c
5	UN156897	. Cores (Pair)	C9078-6	2, 2a, 2b 2c
6	UM104169	. Nut	8265-359	2, 2a, 2b 2c
7	UM185878	. Lock Washer	8486-405	2, 2a, 2b 2c
8	UM196206	. Insulated Stop	8750-2724	2, 2a, 2b 2c
9	UM122782	. Binding Post (for coil lead)	8094-1192	2, 2a, 2b 2c
10	UM72948	. Nut	8109-383	2, 2a, 2b 2c
15	UN184912	Coil, 1-ohm	8133-452	A, Ab, H Hb
15a	UN144439	Coil, 2-ohms	8133-365	Aa, Ac, B Ba, D, Ha Hc, Hd, P Pa
15b	UN198487	Coil, 2-ohms Slow Drop-away	8133-388	E
15c	UN156501	Coil, 8-ohms	8133-365	Ad, Bb
15d	UN214563	Coil, 15-ohms	8133-452	Ae
15e	UN179520	Coil, 20-ohms Slow Drop-away	8133-388	Ea
15f	UN189122	Coil, 27.5-ohms	8133-452	Af, Bc
15g	UN159678	Coil, 30-ohms	8133-339	Ag

REF.	PIECE	DESCRIPTION	DRAWING	USED ON
15h	UN153693	Coil, 50-ohms	8133-452	Ah, He
15j	UN157893	Coil, 50-ohms Slow Drop-away	8133-388	Eb, M
15k	UN138111	Coil, 125-ohms	8133-339	Aj, Bd Da, Hf, Pb, T
15m	UN157894	Coil, 125-ohms Slow Drop-away	8133-388	Ec, Ma
15n	UN157895	Coil, 200-ohms Slow Drop-away	8133-388	Ed, F, Mb S
15p	UN153698	Coil, 250-ohms	8133-452	Ak, Be, C Ca, Cb, Db Hg, Hh, J K, L, Pc Pd, Pe, R Ta, Tb, U V
15r	UN157896	Coil, 250-ohms Slow Drop-away	8133-388	Ee, Fa, G Mc, N, Sa W
15s	UN144561	Coil, 335-ohms	8133-452	Am, Cc Hj, Pf, Pg Tc
15t	UN143067	Coil, 500-ohms	8133-339	An, Bf, Cd Ce, Cf, Dc Hk, Hm Ja, Ka, La Ph, Pj, Ra Td
15u	UN157897	Coil, 500-ohms Slow Drop-away	8133-388	Sb
15v	UN156502	Coil, 750-ohms	8133-452	Ap, Dd Hn
15w	UN147953	Coil, 1000-ohms	8133-339	Aq
16	UM168826	Washer	8078-1499	All
17	UM184680	Coil Lock	8735-784	All
18	UM142640	Back Strap	8162-221	All
19	UJ50036	Cap Screw, 5/16" x 3/4" hex. head (Cad. Pl.)		All
20	UM69705	Washer	7828-287	All
21	UM29103	Nut	8109-194	All
22	UM142777	Tag (Marked +)	8988-75A	All
23	UJ47818	Washer	7828-139	All
24	UM29101	Nut	8109-193	All
25	UJ63133	Name Plate (4 point relays) (Orders should specify piece number of relay for which desired)	8225-422	A to G
25a	UJ63137	Name Plate (6 point relays) (Orders should specify piece number of relay for which desired)	8225-424	H to N
25b	UJ63138	Name Plate (8 point relays) (Orders should specify piece number of relay for which desired)	8225-425	P to Sb
25c	UJ63141	Name Plate (10 point relays) (Orders should specify piece number of relay for which desired)	8225-427	T to W

REF.	PIECE	DESCRIPTION	DRAWING	USED ON
26	UJ52620	Screw, No. 4-40 x 1/4" (Tin Pl.)		All
27	UJ47081	Gasket (4 point relays)	8078-1933	A to G
27a	UJ47144	Gasket (6 point relays)	8078-1933	H to N
27b	UJ47289	Gasket (8 point relays)	8078-1436	P to Sb
27c	UJ47291	Gasket (10 point relays)	8078-1444	T to W
28	UR333041	Foot	12748-164	A to N
29	UM267499	Nut	8109-383	A to N
33	UN172589	Shock Absorber (Shelf Type) (4 point relays)	12404-27	A to G
33a	UN172590	Shock Absorber (Shelf Type) (6 point relays)	12404-27	H to N
33b	UN172591	Shock Absorber (Shelf Type) (8 point relays)	12404-27	P to Sb
33c	UN172592	Shock Absorber (Shelf Type) (10 point relays)	12404-27	T to W
34	UM113978	Binding Post(For coil lead)	8094-1192	All
35	UM134516	Lock Washer	8486-368	All
36	UM151836	Nut	8109-445	All
37	UN149211	Armature and Bracket Complete (4 point relays)	C9078-7	A to G
37a	UN142654	Armature and Bracket Complete (6 point relays)	C9078-7	H to N
37b	UN155487	Armature and Bracket Complete (8 point relays)	C9078-7	P to Sb
37c	UN156802	Armature and Bracket Complete (10 point relays)	C9078-7	T to W
38	UN149210	. Armature	8157-347	37
38a	UN142649	. Armature	8157-336	37a
38b	UN155808	. Armature	8157-361	37b
38c	UN156820	. Armature	8157-365	37c
39	UM195816	. Bracket	8303-100	37, 37a 37b, 37c
40	UM159814	. Pivot Screw	8378-354	37, 37a 37b, 37c
41	UM159815	. Lock Washer	8486-395	37, 37a 37b, 37c
46	UM195913	Screw	8098-1300	All
47	UM185878	Washer	8486-405	All
48	UM57497	Dowel	8097-872	All
49	UM149076	Screw	8098-549	All
50	UM1506	Nut	8109-12	All
51	UM178251	Lock Washer	8486-405	All
52	UM150113	Spring Support	9968-849	All
53	UM142673	Screw	8098-1300	All
54	UM149339	Washer	8486-368	All
55	UM150166	Screw	8098-550	All
56	UM150140	Washer	8486-367	All
57	UN333061	Case (4 point relays)	C9078-43	A to G

REF.	PIECE	DESCRIPTION	DRAWING	USED ON
57a	UN333492	Case (6 point relays)	C9078-45	H to N
58	UM34340	. Ventilator	7318-119	57, 57a
59	UM72948	Nut	8109-383	All
60	UM145747	Washer (For quick acting relay)	7828-218	*
61	UM25107	Bushing (For quick acting relay)	C7459-2	*
62	UJ79905	Plug (For plugging unused holes in top plate)	8078-732	All
63	UN195911	Connector	10934-75	*
64	UM173276	Bracket (For wall mounting)	10914-342	All
65	UJ52092	Screw, No. 10-32 flat head steel (Tin. Pl.)		All
66	UJ47733	Lock Washer, No. 10 steel (Tin. Pl.)		All
67	UJ48172	Hex. Nut, No. 10-32 steel (Tin. Pl.)		All
68	UN149060	Base Assembly. Used for 4 point relays previous to 10/18/55	C9078-14	
68a	UN142670	Base Assembly. Used for 6 point relays previous to 10/18/55	C9078-6	
68b	UN142671	Base Assembly (8 point relays)	C9078-6	P to Sb
68c	UN145912	Base Assembly (10 point relays)	C9078-6	T to W
69	UN149013	. Base Plate Complete	10937-6	68
69a	UN142667	. Base Plate Complete	C9078-10	68a
69b	UN142669	. Base Plate Complete	C9078-10	68b
69c	UN145914	. Base Plate Complete	C9078-12	68c
70	UM149012	. . Base Plate	10937-6	69
70a	UM142666	. . Base Plate	C9078-10	69a
70b	UM142668	. . Base Plate	C9078-10	69b
70c	UM145913	. . Base Plate	C9078-12	69c
71	UM34340	. . Ventilator	7318-119	69, 69a 69b, 69c
72	UM108066	. . Collar	8350-941	69, 69a
73	UM131216	. . Corner Stud	8114-632	69, 69a
73a	UM142633	. . Corner Stud	8114-632	69b, 69c
74	UM131215	. . Supporting Stud	8114-631	69, 69a
74a	UM145116	. . Supporting Stud	8114-631	69b, 69c
75	UM142646	. Glass Shield (Side and end for 4 point relays, end for 6, 8, 10 point relays)	8163-294	68, 68a 68b, 68c
75a	UM142645	. Glass Shield (Side)	8163-294	68a
75b	UM142467	. Glass Shield (Side)	8163-294	68b
75c	UM145941	. Glass Shield (Side)	8163-294	68c
76	UM149034	. Gasket	8078-1451	68
76a	UM142636	. Gasket	8078-1435	68a
76b	UM142638	. Gasket	8078-1436	68b

REF.	PIECE	DESCRIPTION	DRAWING	USED ON
76c	UM145943	. Gasket	8078-1444	68c
77	UN142653	. Shield Support	10932-29	68, 68a 68b, 68c
78	UN161180	Center Post Complete. For 8 and 10 point relays, used on 4 and 6 point relays previous to 10/18/55 . . .	8098-1299	P to W
79	UM142644	. Center Post.	8098-1299	78
80	UM142632	. Bushing	8095-631	78
81	UJ48603	Cotter Pin, 1/16" x 1/2" (Tin Pl.)		P to W
82	UM138218	Nut. For 8 and 10 point relays, used on 4 and 6 point relays previous to 10/18/55	8265-252	P to W
83	UM178061	Ferrule. For 8 and 10 point slow drop-away relays. .	8350-785	S, Sa, Sb, W
84	UM142642	Screw	8098-1298	P to W
85	UM537	Nut . . . . . Note: Refs. 84 and 85 are used for shipping, replace with Ref. 86 when relay is placed in service	8109-1	P to W
86	UM137935	Plug	8098-1289	P to W

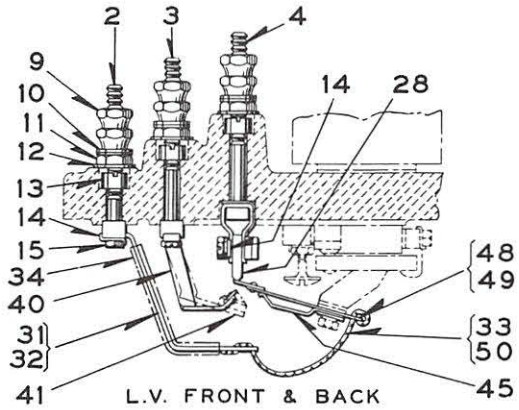

L.V. FRONT & BACK

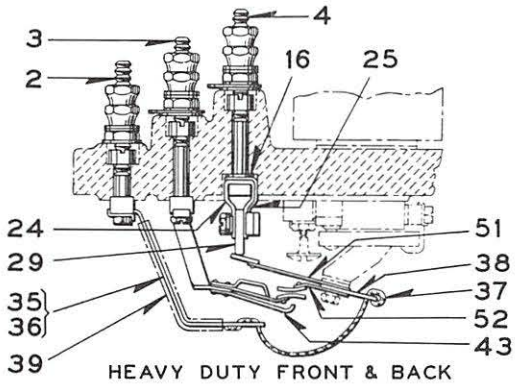

HEAVY DUTY FRONT & BACK

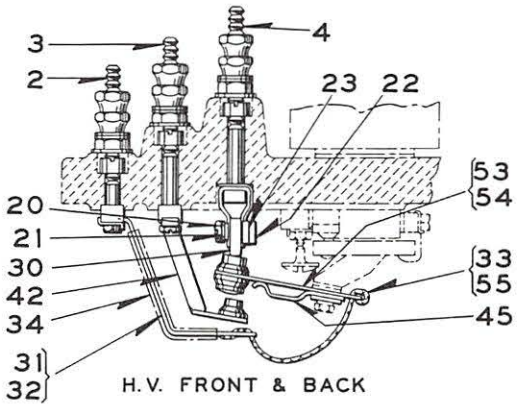

H.V. FRONT & BACK

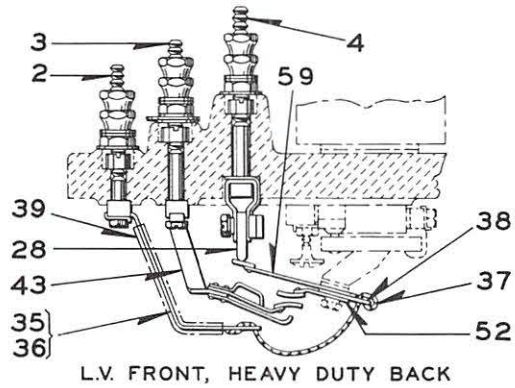

L.V. FRONT, HEAVY DUTY BACK

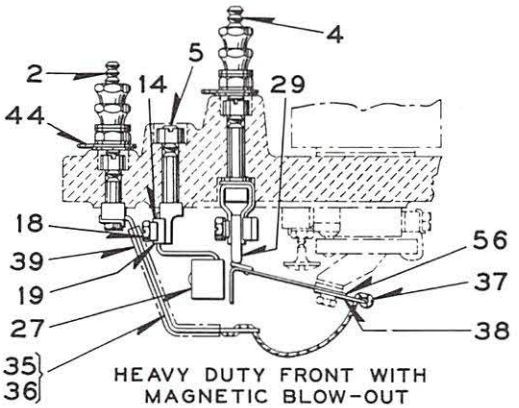

HEAVY DUTY FRONT WITH MAGNETIC BLOW-OUT

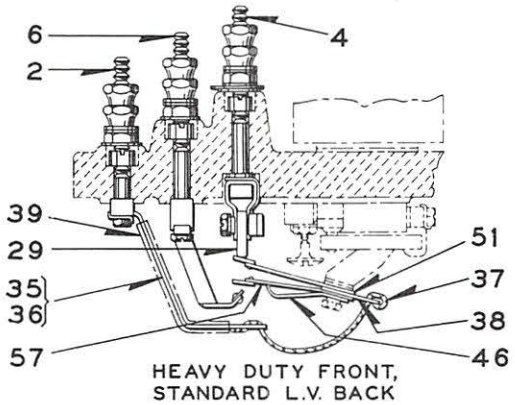

HEAVY DUTY FRONT, STANDARD L.V. BACK

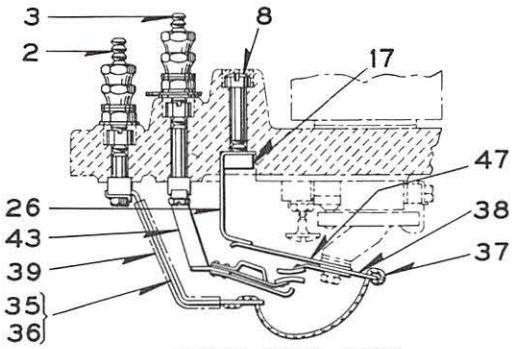

HEAVY DUTY BACK

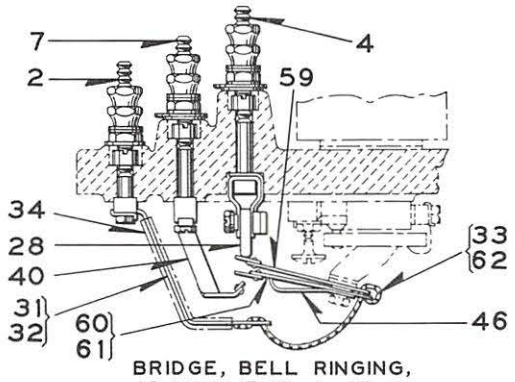

BRIDGE, BELL RINGING, ADJUSTMENT A OR C.

CONTACT SPRING COMBINATIONS
FOR STYLE DN-11 D.C. NEUTRAL RELAYS

CONTACT SPRING COMBINATIONS FOR STYLE DN-11 D.C. NEUTRAL RELAYS

Indented item descriptions indicate that the references in the "Used On" column refer to this Plate, E1-1.2. All other references refer to the General Plate E1-1. When an asterisk (*) appears in the "Used On" column it indicates that these components are used on special purpose DN-11 relays which are not listed with the standard relays appearing on the General Plate E1-1.

Order by Plate, Reference, Piece and Abbreviated Description

REF.	PIECE	DESCRIPTION	DRAWING	USED ON
2	UM131234	Binding Post	8094-2125	All
3	UM142631	Binding Post	8094-2125	All
4	UM131237	Binding Post	8094-1192	All
5	UM233318	Binding Post	8094-2447	*
6	UM231670	Binding Post	8094-2445	*
7	UM152099	Binding Post	8094-2125	*
8	UM122489	Machine Screw, No. 14-24 x 1-3/8" fil. head steel (Tin. Pl.)	8094-1192	*
9	UM29101	Nut	8109-193	All
10	UJ47818	Washer	7828-139	All
11	UM29103	Nut	8109-194	All
12	UM69705	Washer	7828-287	All
13	UM72948	Nut	8109-383	All
14	UM134516	Lock Washer	8486-368	All
15	UM62977	Screw	8098-845	All
16	UM52335	Washer	7828-184	C, Ca, Cc to Ce, K, Ka
17	UM410442	Nut	410442	*
18	UM131239	Screw	8098-845	*
19	UM233321	Lock Washer	8486-433	*
20	UM57996	Screw	8098-845	All
21	UM20686	Lock Washer	7828-108	All
22	UM151836	Nut	8109-445	All
23	UM173737	Lock Washer	8486-403	All
24	UM131245	Contact Holder	8094-2122	All
25	UM134400	Lock Washer	8486-371	All
26	UM192829	Bracket	10914-667	*
27	UM233521	Magnetic Blow-out Assembly	8094-2448	*
28	UJ70940	Contact Tip (Silver Imp. Carbon) L.V.	8341-476	B to Bf F, Fa, J, Ja, N, R, Ra U

REF.	PIECE	DESCRIPTION	DRAWING	USED ON
28a	UN159125	Contact Tip (Silver) L.V.	8094-2240	*
29	UM106290	Contact Tip (Silver Imp. Carbon) Heavy Duty	8341-242	C, Ca, Cc, Cd, Ce, K, Ka
30	UM168308	Contact Tip (Silver Imp. Carbon) H.V.	8341-485	D to Dd, L, La, V
31	UN142643	Non-Insulated Connector Complete (high or low voltage)	8064-631	A to Bf, Ca, Cb, Ce, Cf, D to W
31a	UN341437	Insulated Connector Complete (high or low voltage) (Used in spaces 1 and 6 of 6 point relays having plastic case)	8064-631	H to N
32	UM142674	. Connector Only	8064-631	31, 31a
33	UM152571	. Flexible Connector	10934-87	31, 31a
34	UM341421	. Insulation	8095-875	31a
35	UN279518	Non-Insulated Connector Complete (Heavy Duty)	8064-631	C to Cf, G, K, Ka
35a	UN341438	Insulated Connector Complete (Heavy Duty) (Used in spaces 1 and 6 of 6 point relays having plastic case)	8064-631	K, Ka
36	UM142674	. Connector Only	8064-631	35, 35a
37	UM137945	. Flexible Connector	10934-87	35, 35a
38	UM279381	. Plate	8064-1005	35, 35a
39	UM341421	. Insulation	8095-875	35a
40	UN131261	Left Hand Back Post with silver tip (low voltage)	8094-2123	A to Aq, Ca, Cb, Ce, Cf, E to Ee, G, H to Hn, K, Ka, M to Mc, P to Pj, S to Td, W
40a	UN131262	Right Hand Back Post with silver tip (low voltage)	8094-2123	A to Aq, Ca, Cb, Ce, Cf, E to Ee, G, H to Hn, K, Ka, M to Mc, P to Pj, S to Td, W
41	UN157394	Left Hand Back Post with silver imp. carbon tip (low voltage)	8094-2234	B to Bf, F, Fa, J, Ja, N, R, Ra, U
41a	UN157395	Right Hand Back Post with silver imp. carbon tip (low voltage)	8094-2234	B to Bf, F, Fa, J, Ja, N, R, Ra, U

REF.	PIECE	DESCRIPTION	DRAWING	USED ON
42	UN145164	Left Hand Back Post with silver imp. carbon tip (high voltage)	8094-2190	D to Dd, L, La, V
42a	UN145165	Right Hand Back Post with silver imp. carbon tip (high voltage)	8094-2190	D to Dd, L, La, V
43	UM192794	Left Hand Back Post with silver tip (heavy duty)	8385-2458	C to Cf, G, K, Ka
43a	UN192795	Right Hand Back Post with silver tip (heavy duty)	8385-2458	C to Cf, G, K, Ka
44	UJ75510	White Tag (Orders should specify marking desired)	8988-75	C to Cf, G, K, Ka
44a	UJ75519	Red Tag (Orders should specify marking desired)	8988-53	*
45	UM180975	Stop Spring	8735-769	A to Bf, Ca, Cb,Ce, Cf, D to W
46	UM156580	Stop Spring	8385-2191	*
47	UM192830	Stop Spring	8735-810	*
48	UN180974	Contact Spring Complete (low voltage front and back)	8385-2336	A to Bf, Ca, Cb, Ce, Cf, E to Ka, M to U, W
49	UN180973	. Contact Spring	8385-2336	48
50	UM152571	. Flexible Connector	10934-87	48
51	UN106289	Contact Spring, Silver Tip (heavy duty front)	8385-2615	C, Ca, Cc, Cd, Ce, K, Ka
51a	UN217239	Contact Spring, Silver Imp. Carbon Tip (high voltage heavy duty front)	8385-2099	*
52	UN192792	Contact Spring (heavy duty back)	8385-2430	C to Cf, G, K, Ka
53	UN180978	Contact Spring Complete (high voltage front and back)	8385-2098	D to Dd, L, La, V
53a	UN180980	Contact Spring Complete (high voltage front)	8385-2099	V
54	UN180977	. Contact Spring	8385-2098	53
54a	UN180979	. Contact Spring	8385-2099	53a
55	UM152571	. Flexible Connector	10934-87	53, 53a
56	UN233324	Contact Spring (heavy duty front for use with magnetic blow-out)	8385-2746	*
57	UN212952	Contact Spring (low voltage back)	8385-2376	*
59	UN150268	Contact Spring (low voltage front)	8385-2336	Cb, Cf, G
60	UN176828	Contact Spring Complete (low voltage back)	8385-2336	*
61	UN156582	. Contact Spring	8385-2336	60
62	UM152571	. Flexible Connector	10934-87	60

STYLE DN-11B BIASED NEUTRAL D.C. RELAY
4 AND 6 POINT

RELAY FEATURES

Permanent magnet bias.

Responds to current of one polarity only.

Permanent magnets provide neutral armature hold-down when relay is de-energized.

Armature will not pick up on either polarity with permanent magnets de-magnetized.

Relay will not pick up with application of energy of reverse polarity at 50 times normal working value.

Operating values will not be affected more than 2% after application of 50 times normal working value for two seconds at either normal or reverse polarity.

APPLICATION:

Designed for use as biased neutral line relay, battery checking relay, and for general circuit applications. When used as a track relay the biased neutral feature provides superior foreign current protection and makes practicable the securing of broken down insulated joint protection by staggering the polarity of adjacent track circuits.

CONTACTS:

Silver to silver-impregnated carbon front. Silver to silver back.

Contact Capacity: 4 amperes up to 30 volts D.C. or 175 volts A.C

PLUG COUPLERS

Plug Couplers permit the removal and replacement of relays without disconnecting any wiring.

Complete units and detail parts for Plug Couplers applicable to the DN-11B relay may be found on Plate E1-9.

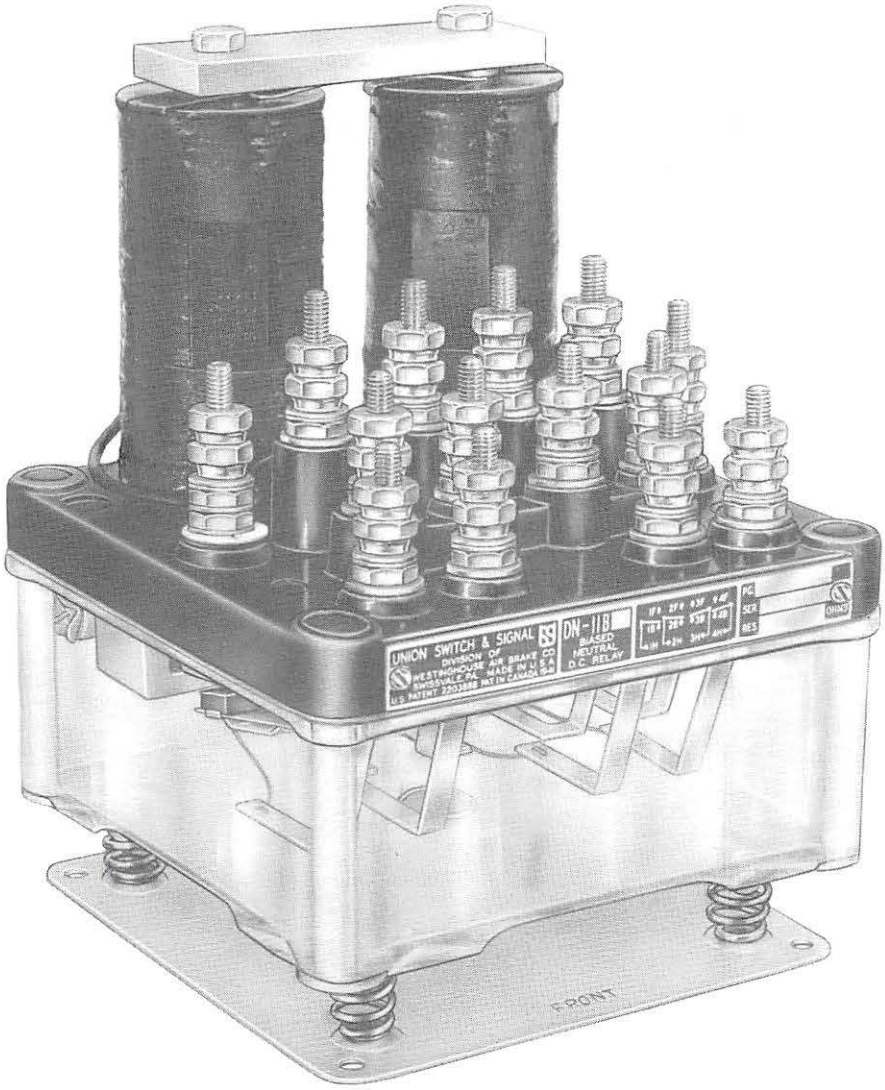

Height 8 5/8", Width 6 1/4", Depth 6 1/4" (4 point shown)

Height 8 5/8", Width 7 5/8", Depth 6 1/4" (6 point)

STYLE DN-11B BIASED NEUTRAL D.C. RELAY

STYLE DN-11B BIASED NEUTRAL D.C. RELAY
4 AND 6 POINT

Details of relays are shown on Plate E1-3.1
Refer to Plate E1-9 for Plug Couplers

Contact Description
Std. = Low voltage, silver to silver-impregnated carbon front and silver to silver back contacts.

Order by Plate, Reference, Piece and Abbreviated Description

4 Point Style DN-11B Biased Neutral D.C. Relay with low voltage contacts					
REF.	PIECE	RESISTANCE OF RELAY-OHMS	CONTACTS	REMARKS	DRAWING
A	UN274064	2	4F-4B Std.		C9077-120
Aa	UN274065	4	4F-4B Std.		C9077-120
Ab	UN274066	55	4F-4B Std.		C9077-120
Ac	UN274067	100	4F-4B Std.		C9077-120
Ad	UN274068	250	4F-4B Std.		C9077-120
Ae	UN274069	500	4F-4B Std.		C9077-120
Af	UN282981	670	4F-4B Std.		C9077-120
Ag	UN274070	1000	4F-4B Std.		C9077-120

6 Point Style DN-11B Biased Neutral D.C. Relay with low voltage contacts					
REF.	PIECE	RESISTANCE OF RELAY-OHMS	CONTACTS	REMARKS	DRAWING
B	UN276125	500	6F-6B Std.		C9077-122
Ba	UN276126	1000	6F-6B Std.		C9077-122

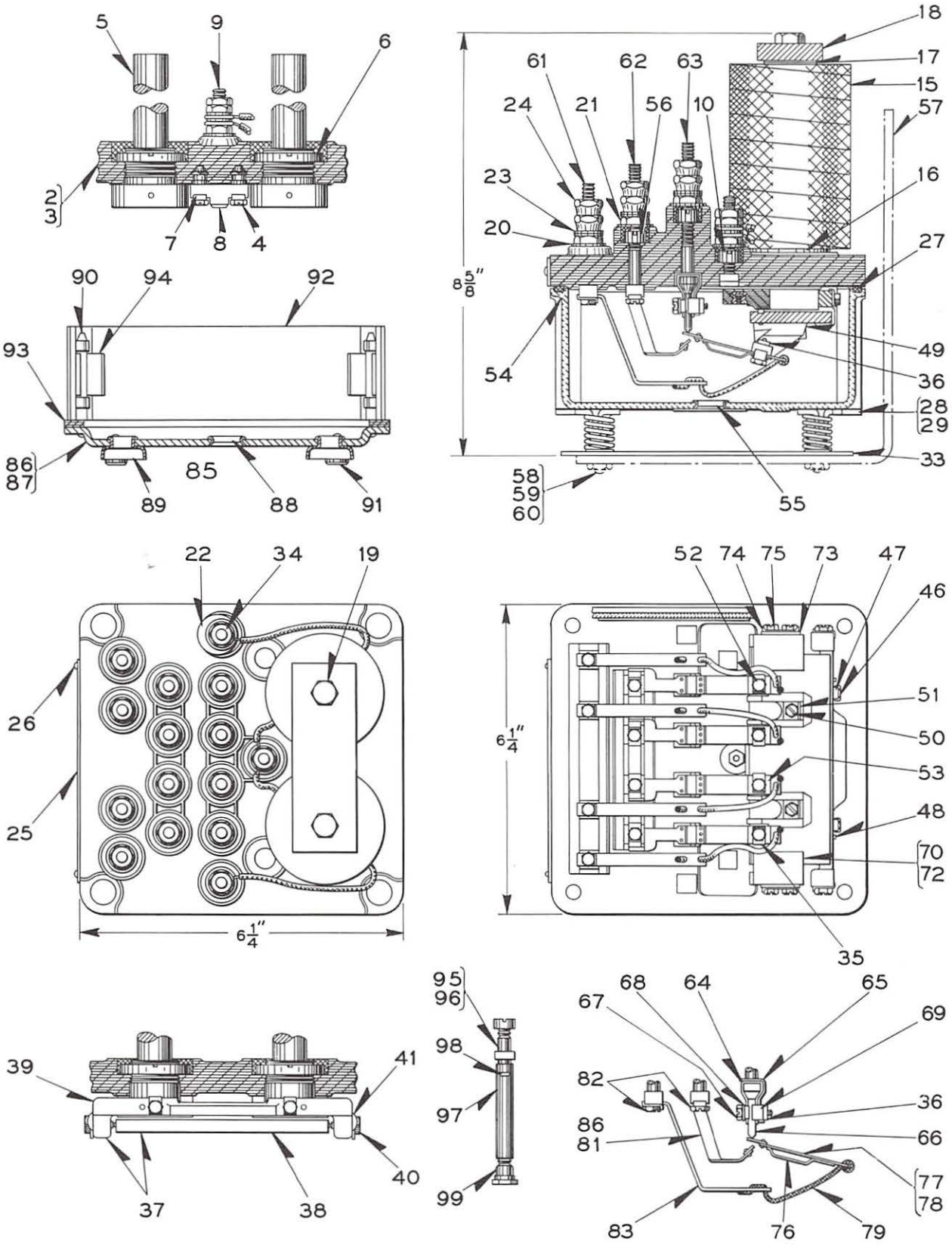

STYLE DN-11B BIASED NEUTRAL

D.C. RELAY 4 POINT

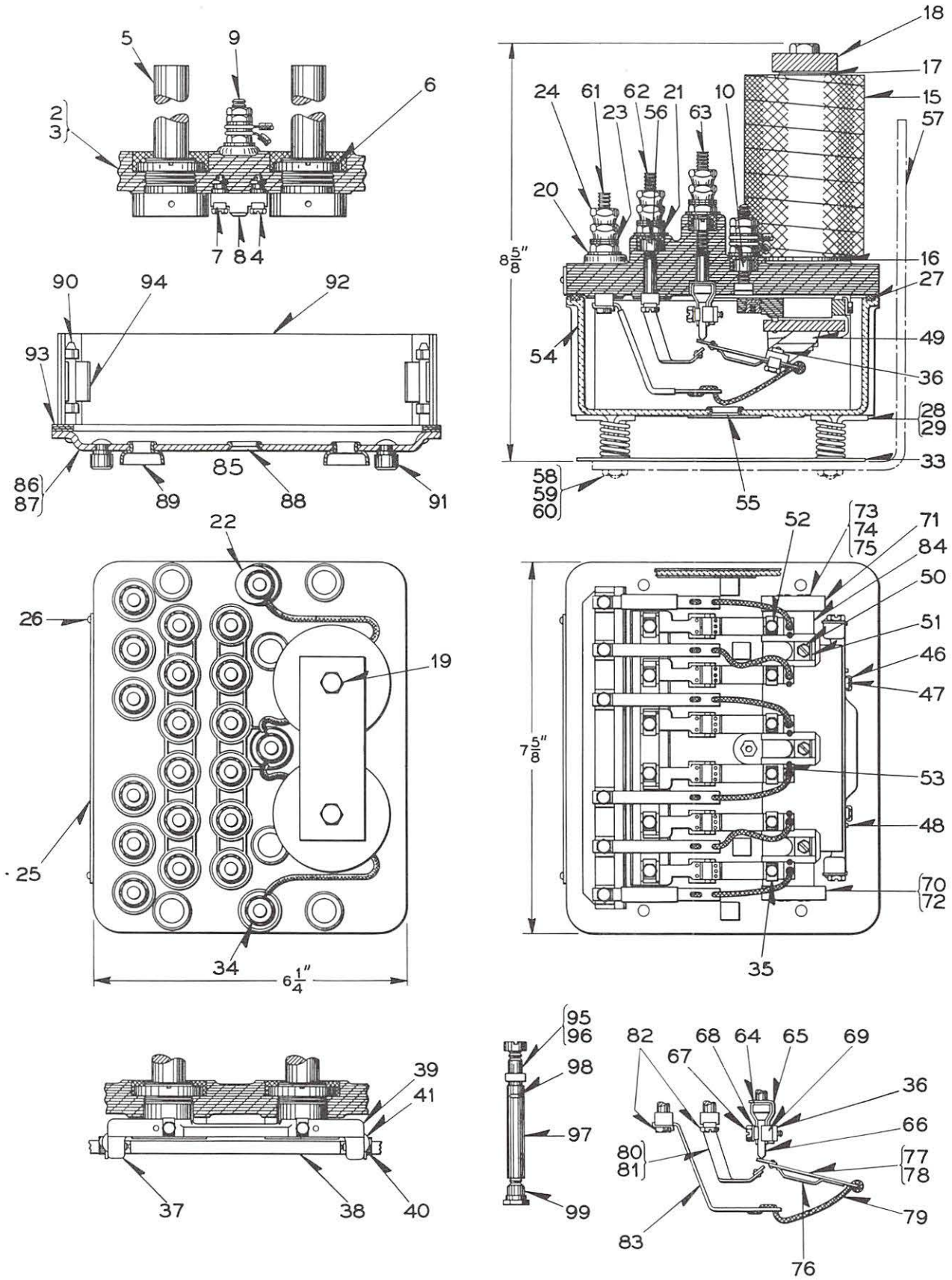

STYLE DN-11B BIASED NEUTRAL

D.C. RELAY 6 POINT

STYLE DN-11B BIASED NEUTRAL D.C. RELAY
4 AND 6 POINT

Detail Parts

Indented item descriptions indicate that the references in the "Used On" column refer to this Plate, E1-3.1. All other references refer to Plate E1-3.

Order by Plate, Reference, Piece and Abbreviated Description

REF.	PIECE	DESCRIPTION	DRAWING	USED ON
2	UN274034	Top Plate Complete (4 point relays)	C9078-40	A to Ag
2a	UN276507	Top Plate Complete (6 point relays)	C9078-40	B, Ba
3	UN156889	. Top Plate	C9078-13	2
3a	UN156887	. Top Plate	C9078-9	2a
4	UM142673	. . Screw	8098-1300	3, 3a
5	UN373915	. Cores, Pair	C9078-6	2, 2a
6	UM104169	. Nut	8265-359	2, 2a
7	UM185878	. Lock Washer	8486-405	2, 2a
8	UM196206	. Insulated Stop	8750-2724	2, 2a
9	UM122782	. Binding Post (for coil lead)	8094-1192	2, 2a
10	UM72948	. Nut	8109-383	2, 2a
15	UN184912	Coil, 1-ohm	8133-452	A
15a	UN144439	Coil, 2-ohms	8133-365	Aa
15b	UN189122	Coil, 27.5-ohms	8133-452	Ab
15c	UN153693	Coil, 50-ohms	8133-452	Ac
15d	UN138111	Coil, 125-ohms	8133-339	Ad
15e	UN153698	Coil, 250-ohms	8133-452	Ae, B
15f	UN144561	Coil, 335-ohms	8133-452	Af
15g	UN143067	Coil, 500-ohms	8133-339	Ag, Ba
16	UM168826	Washer	8078-1499	All
17	UM184680	Coil Lock	8735-784	All
18	UM142640	Back Strap	8162-221	All
19	UJ50036	Cap Screw, 5/16" - 18 x 3/4" hex. head (Cad. Pl.)		All
20	UM69705	Washer	7828-287	All
21	UM29103	Nut	8109-194	All
22	UM142777	Tag (Marked +)	8988-75A	All
23	UJ47818	Washer	7828-139	All
24	UM29101	Nut	8109-193	All
25	UJ630306	Name Plate (4 point relays) (Orders should specify piece number of relay for which desired)	8225-1038	A to Ag

REF.	PIECE	DESCRIPTION	DRAWING	USED ON
25a	UJ630299	Name Plate (6 point relays) (Orders should specify piece number of relay for which desired)	8225-1037	B, Ba
26	UJ52620	Screw, No. 4-40 x 1/4" round head (Tin. Pl.)		All
27	UJ47081	Gasket (4 point relays)	8078-1933	A to Ag
27a	UJ47144	Gasket (6 point relays)	8078-1933	B, Ba
28	UR333041	Foot	12748-164	All
29	UM267499	Nut	8109-383	All
33	UN172589	Shock Absorber (Shelf Type) (4 point relays)	12404-27	A to Ag
33a	UN172590	Shock Absorber (Shelf Type) (6 point relays)	12404-27	B, Ba
34	UM113978	Binding Post	8098-1192	All
35	UM134516	Lock Washer	8486-368	All
36	UM151836	Nut	8109-445	All
37	UN274039	Armature and Bracket Complete (4 point relays)	C9078-7	A to Ag
37a	UN276506	Armature and Bracket Complete (6 point relays)	C9078-7	B, Ba
38	UN274038	. Armature	8157-513	37
38a	UN276613	. Armature	8157-517	37a
39	UM195816	. Armature Bracket	8303-100	37, 37a
40	UM159814	. Pivot Screw	8378-354	37, 37a
41	UM159815	. Lock Washer	8486-395	37, 37a
46	UM195913	Screw	8098-1300	All
47	UM185878	Washer	8486-405	All
48	UM57497	Dowel	8097-872	All
49	UM150113	Spring Support	9968-849	All
50	UM142673	Screw	8098-1300	All
51	UM149339	Washer	8486-368	All
52	UM150166	Screw	8098-550	All
53	UM150140	Washer	8486-367	All
54	UN333061	Case (4 point relays)	C9078-43	A to Ag
54a	UN333492	Case (6 point relays)	C9078-45	B, Ba
55	UM34340	. Ventilator	7318-119	54, 54a
56	UM72948	Nut	8109-383	All
57	UM173276	Bracket (For wall mounting)	10914-342	All
58	UJ52092	Screw, No. 10-32 flat head steel (Tin Pl.)		All
59	UJ47733	Lock Washer, No. 10 steel (Tin Pl.)		All
60	UJ48172	Hex. Nut, No. 10-32 steel (Tin Pl.)		All
61	UM131234	Binding Post	8094-2125	All
62	UM142631	Binding Post	8094-2125	All
63	UM131237	Binding Post	8094-1192	All
64	UM131245	Contact Holder	8094-2122	All
65	UM134400	Nut Lock	8486-361	All

REF.	PIECE	DESCRIPTION	DRAWING	USED ON
66	UJ70940	Contact Tip (Silver Imp. Carbon)	8341-476	All
67	UM57996	Screw	8098-845	All
68	UM20686	Washer	7828-108	All
69	UM173737	Nut Lock	8486-403	All
70	UM274035	L. H. Pole Piece	8250-136	A to Ag
70a	UM339291	L. H. Pole Piece	8250-137	B, Ba
71	UM274036	R. H. Pole Piece	8250-136	A to Ag
71a	UM276602	R. H. Pole Piece	8250-137	B, Ba
72	UM269811	Permanent Magnet	12586-29	All
73	UM274041	Clamping Plate	9999-2418	All
74	UM268066	Nut Lock	8486-432	All
75	UM274040	Screw	8098-1506	A to Ag
75a	UM276609	Screw	8098-1506	B, Ba
76	UM180975	Stop Spring	8735-769	All
77	UN180974	Contact Spring Complete (low voltage front and back)	8385-2336	All
78	UN180973	. Contact Spring	8385-2336	77
79	UM152571	. Flexible Connector	10934-87	77
80	UN131261	Left Hand Back Post with silver tip (low voltage)	8094-2123	All
81	UN131262	Right Hand Back Post with silver tip (low voltage)	8094-2123	All
82	UM62977	Screw	8098-845	All
83	UN142643	Non-Insulated Connector Complete	8064-631	All
83a	UN341437	Insulated Connector Complete (Used in spaces 1 and 6 of 6 point relays having plastic case)	8064-631	B, Ba
84	UM276614	Pole Piece	8250-138	B, Ba
85	UN149060	Base Assembly (Used for 4 point relays previous to 11/9/55)	C9078-14	
85a	UN142670	Base Assembly (Used for 6 point relays previous to 11/9/55)	C9078-6	
86	UN149013	. Base Plate Complete	10937-6	85
86a	UN142667	. Base Plate Complete	C9078-10	85a
87	UM149012	. . Base Plate	10937-6	86
87a	UM142666	. . Base Plate	C9078-10	86a
88	UM34340	. . Ventilator	7318-119	86, 86a
89	UM108066	. . Collar	8350-941	86, 86a
90	UM131216	. . Corner Stud	8114-632	86, 86a
91	UM131215	. . Supporting Stud	8114-631	86, 86a
92	UJ53415	. Glass Shield (Side and end for 4 point relays, end 6 point relays)	8163-294	85, 85a
92a	UJ53414	. Glass Shield (Side)	8163-294	85a
93	UJ47262	. Gasket	8078-1451	85
93a	UJ47288	. Gasket	8078-1435	85a

REF.	PIECE	DESCRIPTION	DRAWING	USED ON
94	UN142653	. Shield Support.	10932-29	85, 85a
95	UN161180	Center Post Complete (Used previous to 11/9/55). . .	8098-1299	
96	UM142644	. Center Post	8098-1299	95
97	UM142632	. Bushing	8095-631	95
98	UJ48603	. Cotter Pin, 1/16" x 1/2" (Tin. Pl.)		95
99	UM138218	Nut (Used previous to 11/9/55)	8265-252	

STYLE DN-11P POWER TRANSFER NEUTRAL D.C. RELAY 4 AND 6 POINT

The DN-11P Power Transfer Relay uses the same basic structure as the DN-11 Relays but has several design features to meet the requirements for power transfer service.

RELAY FEATURES

Equipped with special contacts and hold-down springs on the armature to provide high back contact pressure.

A rectifier mounted on the relay and connected with the coils provides for A.C. operation.

Non-fusible contacts insure against welding due to lightning or abnormal service.

Positive drop-away and positive pick-up to improve contact performance.

Liberal air gap.

Definite under-voltage release when the line voltage drops to approximately 70% of normal.

Good voltage characteristic under wide changes in temperature.

APPLICATION:

Designed for use for transferring power from an A.C. source to a standby D.C. battery source during a power failure.

CONTACTS:

Silver to silver impregnated carbon front. Silver to silver impregnated carbon back.

Capacity: 15 amperes at 30 volts A.C. or D.C.

PLUG COUPLERS

Plug Couplers permit the removal and replacement of relays without disconnecting any wiring.

Complete units and detail parts for Plug Couplers applicable to the DN-11P relay may be found on Plate E1-9.

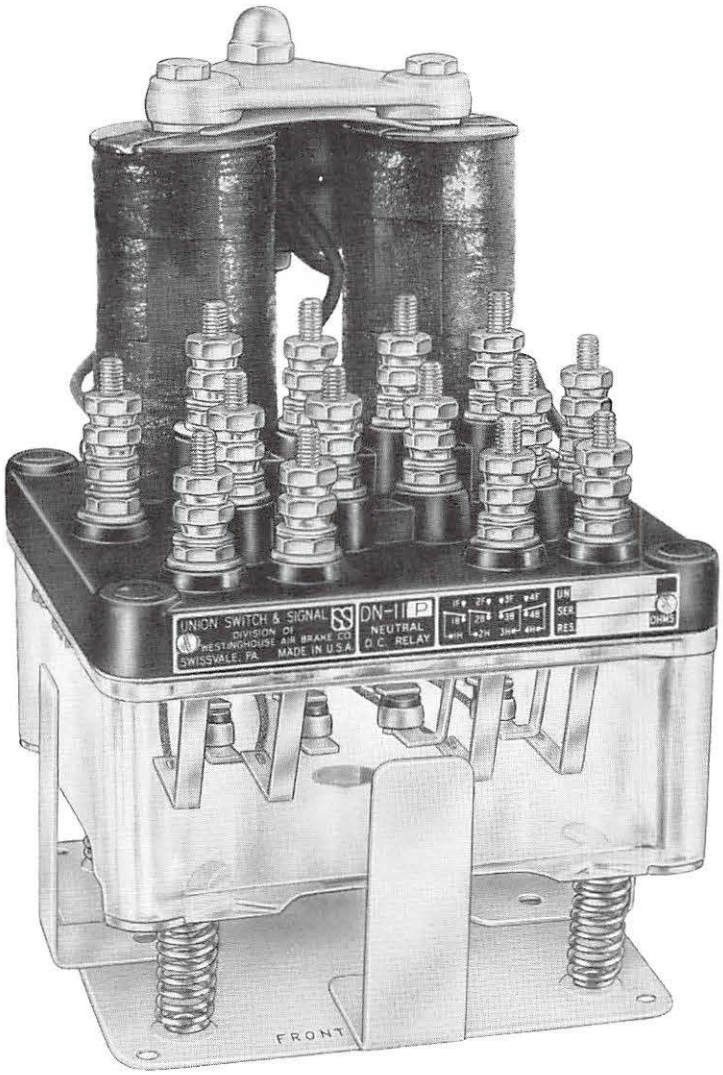

Height 9 1/8", Width 6 1/4", Depth 7 15/16" (4 point shown)

Height 9 1/8", Width 7 5/8", Depth 7 15/16" (6 point)

STYLE DN-11P POWER TRANSFER NEUTRAL D.C. RELAY

STYLE DN-11P POWER TRANSFER NEUTRAL D.C. RELAY
4 AND 6 POINT

Details of relays are shown on Plate E1-5.1
Refer to Plate E1-9 for Plug Couplers

Contact Description:
Power Transfer Contacts = Low voltage, silver to silver-impregnated carbon front and back contacts.
Special L.V. = Low voltage, silver to silver-impregnated carbon front and silver to silver back contacts.

Order by Plate, Reference, Piece and Abbreviated Description

4 Point Style DN-11P Power Transfer D.C. Neutral Relay. Dwg. C9077-109					
REF.	PIECE	RESISTANCE OF RELAY-OHMS	CONTACTS POWER TRANSFER	A.C. VOLTS	OPERATING VOLTAGE
A	UN286648	45-45	4F-4B L.V.	8	8 Volts
Aa	UN220131	75-75	4F-4B L.V.	10	10 Volts
Ab	UN214021	125-125	4F-4B L.V.	12	12 Volts

6 Point Style DN-11P Power Transfer D.C. Neutral Relay. Dwg. C9077-114						
REF.	PIECE	RESISTANCE OF RELAY-OHMS	CONTACTS		A.C. VOLTS	OPERATING VOLTAGE
			POWER TRANSFER	SPECIAL L.V.		
B	UN242672	75-75	4F-4B L.V.	2F-2B	10	10 Volts

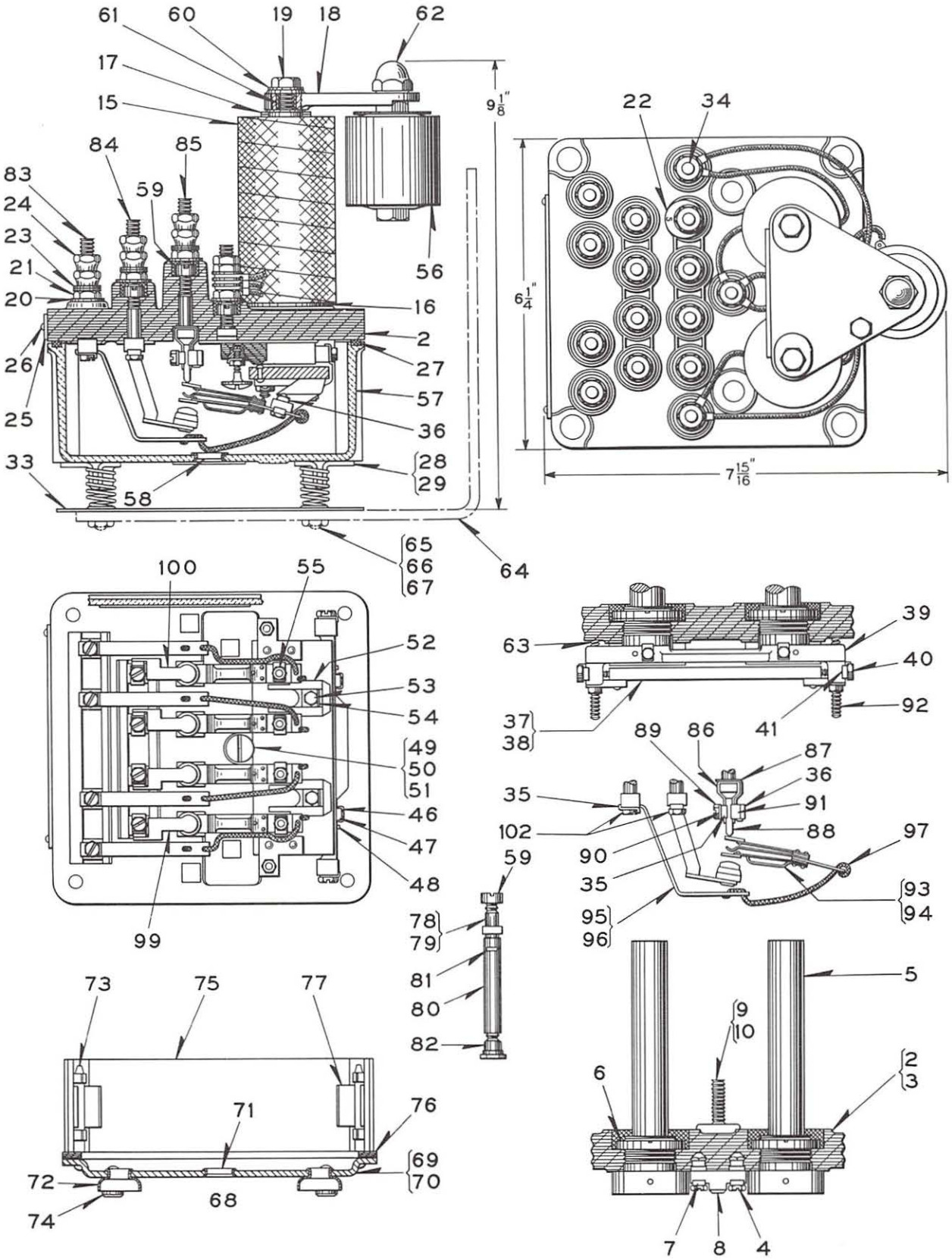

STYLE DN-11P POWER TRANSFER

NEUTRAL D.C. RELAY 4 POINT

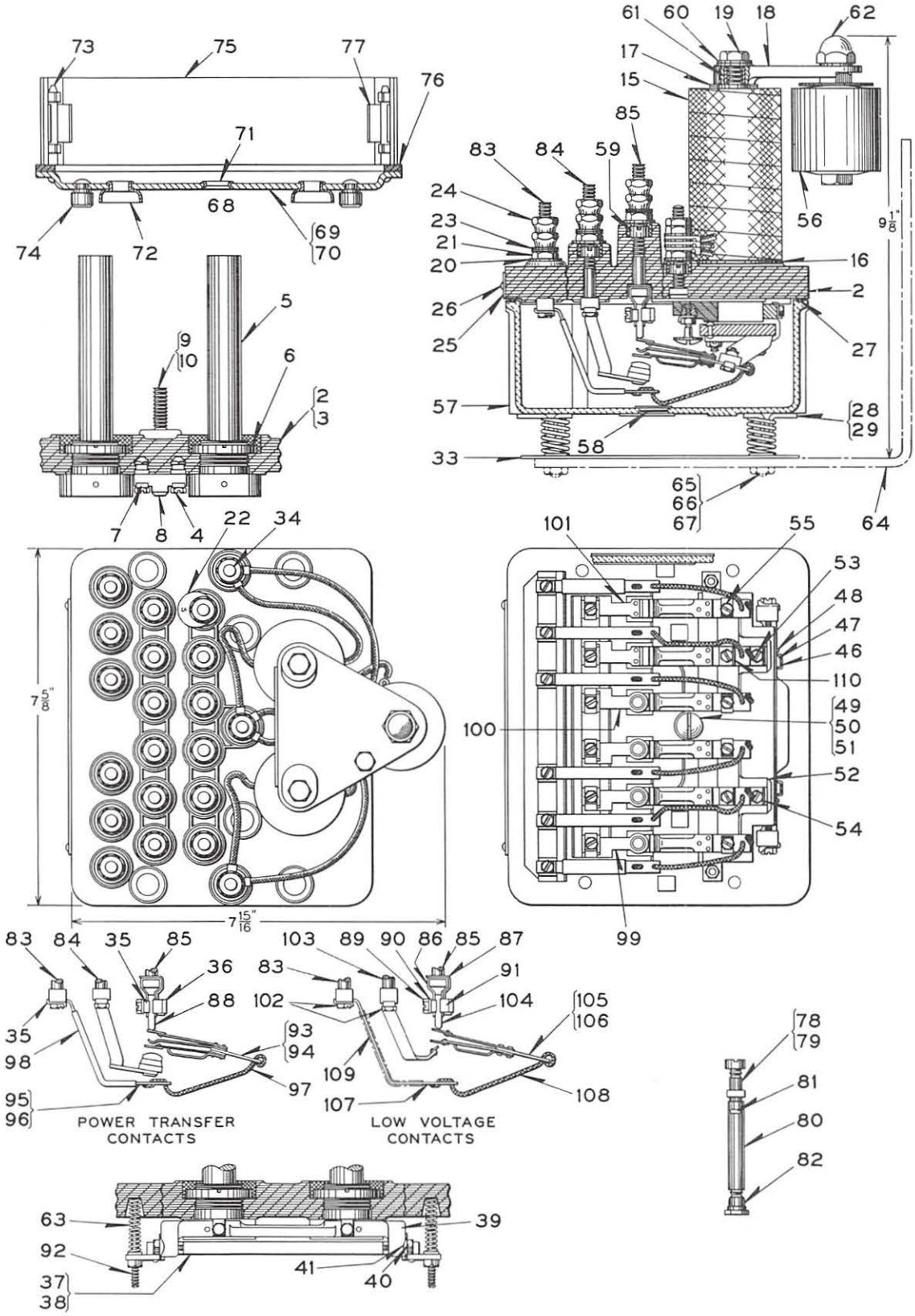

STYLE DN-11P POWER TRANSFER

NEUTRAL D.C. RELAY 6 POINT

STYLE DN-11P POWER TRANSFER NEUTRAL D.C. RELAY
4 AND 6 POINT

Detail Parts

Indented item descriptions indicate that the references in the "Used On" column refer to this Plate, E1-5.1. All other references refer to Plate E1-5.

Order by Plate, Reference, Piece and Abbreviated Description

REF.	PIECE	DESCRIPTION	DRAWING	USED ON
2	UN149185	Top Plate Complete (4 point relays)	C9078-7	A, Aa, Ab
2a	UN142660	Top Plate Complete (6 point relays)	C9078-7	B
3	UN156889	. Top Plate	C9078-13	2
3a	UN156887	. Top Plate	C9078-13	2a
4	UM142673	. . Screw	8098-1300	3, 3a
5	UN156897	. Cores (Pair)	C9078-6	2, 2a
6	UM104169	. Nut	8265-359	2, 2a
7	UM185878	. Lock Washer	8486-405	2, 2a
8	UM196206	. Insulated Stop	8750-2724	2, 2a
9	UM122782	. Binding Post (for coil lead)	8094-1192	2, 2a
10	UM72948	. Nut	8109-383	2, 2a
15	UN145829	Coil, 45-ohms	8133-339	A
15a	UN137703	Coil, 75-ohms	8133-339	Aa, B
15b	UN138111	Coil, 125-ohms	8133-339	Ab
16	UM168826	Washer	8078-1499	All
17	UM184680	Coil Lock	8735-784	All
18	UM218622	Back Strap	8162-278	All
19	UJ50036	Cap Screw, 5/16" x 3/4" hex. head (Cad. Pl.)		All
20	UM69705	Washer	7828-287	All
21	UM29103	Nut	8109-194	All
22	UJ75510-0092	Tag (Marked S)	8988-75	All
23	UJ47818	Washer	7828-139	All
24	UM29101	Nut	8109-193	All
25	UJ63133	Name Plate (4 point relays) (Orders should specify piece number of relay for which desired)	8225-422	A, Aa, Ab
25a	UJ63137	Name Plate (6 point relays) (Orders should specify piece number of relay for which desired)	8225-424	B
26	UJ52620	Screw, No. 4-40 x 1/4" (Tin. Pl.)		All
27	UJ47081	Gasket (4 point relays)	8078-1933	A, Aa, Ab
27a	UJ47144	Gasket (6 point relays)	8078-1933	B

REF.	PIECE	DESCRIPTION	DRAWING	USED ON
28	UR333041	Foot	12748-164	All
29	UM267499	Nut	8109-383	All
33	UN223715	Shock Absorber (Shelf Type) (4 point relays)	12404-49	A, Aa, Ab
33a	UN223716	Shock Absorber (Shelf Type) (6 point relays)	12404-49	B
34	UM113978	Binding Post (for coil lead)	8094-1192	All
35	UM134516	Lock Washer	8486-368	All
36	UM151836	Nut	8109-445	All
37	UN218614	Armature and Bracket Complete (4 point relays)	C9078-7	A, Aa, Ab
37a	UN242795	Armature and Bracket Complete (6 point relays)	C9078-7	B
38	UN218612	. Armature	8157-470	37
38a	UN242794	. Armature	8157-500	37a
39	UM218613	. Bracket	8303-100	37, 37a
40	UM159814	. Pivot Screw	8378-354	37, 37a
41	UM159815	. Lock Washer	8486-395	37, 37a
46	UM195913	Screw	8098-1300	All
47	UM185878	Washer	8486-405	All
48	UM57497	Dowel	8097-872	All
49	UM149076	Screw	8098-549	All
50	UM1506	Nut	8109-12	All
51	UM178251	Lock Washer	8486-405	All
52	UM150113	Spring Support (2-way)	9968-849	A, Aa, Ab
52a	UM170966	Spring Support (3-way)	9968-1014	B
53	UM142673	Screw	8098-1300	All
54	UM149339	Washer	8486-368	All
55	UM150166	Screw	8098-550	All
56	UN196315	Rectifier	12558-32	Ab
56a	UN196450	Rectifier	12558-30	Aa, B
56b	UN197157	Rectifier	12558-33	A
57	UN333061	Case (4 point relays)	C9078-43	A, Aa, Ab
57a	UN333492	Case (6 point relays)	C9078-45	B
58	UM34340	. Ventilator	7318-119	57, 57a
59	UM72948	Nut	8109-383	All
60	UM196812	Washer	7828-176	All
61	UM25107	Bushing	C7459-2	All
62	UM141603	Nut	8265-253	All
63	UM135953	Spring	8124-260	All
64	UM196402	Bracket (for wall mounting)	10914-342	All
65	UJ52092	Screw, No. 10-32 flat head steel (Tin Pl.)		All
66	UJ47733	Lock Washer, No. 10 steel (Tin Pl.)		All
67	UJ48172	Hex. Nut. No. 10-32 steel (Tin. Pl.)		All

REF.	PIECE	DESCRIPTION	DRAWING	USED ON
68	UN149060	Base assembly. Used for 4 point relays previous to 11/2/55	C9078-14	
68a	UN142670	Base assembly. Used for 6 point relays previous to 11/2/55	C9078-6	
69	UN149013	. Base Plate Complete	10937-6	68
69a	UN142667	. Base Plate Complete	C9078-10	68a
70	UM149012	. . Base Plate	10937-6	69
70a	UM142666	. . Base Plate	C9078-10	69a
71	UM34340	. . Ventilator	7318-119	69, 69a
72	UJ79782	. . Collar	8350-941	69, 69a
73	UM131216	. . Corner Stud	8114-632	69, 69a
74	UM131215	. . Supporting Stud	8114-631	69, 69a
75	UJ53415	. Glass Shield (Side and end for 4 point relays, end 6 point relays)	8163-294	68, 68a
75a	UJ53414	. Glass Shield (Side for 6 point relays)	8163-294	68a
76	UJ47262	. Gasket	8078-1451	68
76a	UJ47288	. Gasket	8078-1435	68a
77	UN142653	. Shield Support	10932-29	68, 68a
78	UN161180	Center Post Complete, Used previous to 11/2/55	8098-1299	
79	UM142644	. Center Post	8098-1299	78
80	UM142632	. Bushing	8095-631	78
81	UJ48603	Cotter Pin, 1/16" x 1/2" (Tin Pl.)		78
82	UM138218	Nut. Used previous to 11/2/55	8265-252	
83	UM131234	Binding Post	8094-2125	All
84	UM142631	Binding Post	8094-2125	All
85	UM131237	Binding Post	8094-1192	All
86	UM131245	Contact Holder	8094-2122	All
87	UM134400	Lock Washer	8486-371	All
88	UM196406	Contact Tip (Silver Imp. Carbon)	8341-242	All
89	UM57996	Screw	8098-845	All
90	UM20686	Washer	7828-108	All
91	UM173737	Lock Washer	8486-403	All
92	UM273785	Screw	8098-1411	All
93	UN279484	Contact Spring Complete with non-insulated connector.	8385-2463	All
93a	UN342078	Contact Spring Complete with insulated connector (used in space 1 of 6 point relays having plastic case)	8385-2463	B
94	UN196397	. Contact Spring	8385-2463	93, 93a
95	UN192977	. Connector (non-insulated)	8064-631	93
95a	UN342077	. Connector (insulated)	8064-631	93a
96	UM142674	. . Connector	8064-631	95, 95a
97	UM170447	. . Flexible Connector	10934-147	95, 95a

REF.	PIECE	DESCRIPTION	DRAWING	USED ON
98	UM341421	. . Insulation	8095-875	95a
99	UN218620	Left Hand Back Post with silver imp. carbon tip.	8094-2415	All
100	UN218621	Right Hand Back Post with silver imp. carbon tip	8094-2315	All
101	UN131262	Right Hand Back Post with silver tip	8094-2123	B
102	UM62977	Screw	8098-845	All
103	UM220903	Binding Post	8094-2125	B
104	UM242799	Contact Tip (Silver Imp. Carbon)	8341-548	B
105	UN285510	Contact Spring Complete with non-insulated connector	8385-2780	B
105a	UN342079	Contact Spring Complete with insulated connector (used in space 6 of 6 point relays having plastic case)	8385-2780	B
106	UN242798	. Contact Spring	8385-2780	105, 105a
107	UM142674	. Connector	8064-631	105, 105a
108	UM45323	. Flexible Connector	10934-87	105, 105a
109	UM341421	. Insulation	8095-875	105a
110	UM171092	Lock Washer	8486-405	B

PLUG COUPLERS
FOR STYLE DN-11, DN-11B, DN-11L AND DN-11P RELAYS

PLUG COUPLERS
FOR STYLE DN-11, DN-11B, DN-11L AND DN-11P RELAYS

Plug couplers permit the removal and replacement of relays without disconnecting any wiring. These couplers are made of moulded bakelite and fitted with terminal posts, spaced and marked the same as the terminals on the relay. Attached to the underside of each terminal post, housed inside individual recesses in the bakelite body are spring clip receptacles which make contact with the standard terminal posts on the relay.

FEATURES:

Materially shortens the time required to remove from service and replace operating relays, thus preventing or reducing train delay time.

Eliminates all possibility of replacing any wiring on wrong terminals when changing operating relays, as wiring is not removed from the plug coupler.

May be applied to relays now in service with little or no change in the operating relay. Wiring is simply removed from the present terminal posts and placed on the corresponding posts on the plug coupler.

Spring clips are designed to maintain ample contact pressure.

Self-aligning and provides uniform contact pressure on all posts.

Terminal binding posts on plug couplers are equipped with an insulated nut which prevents grounding or short circuiting posts when the coupler is removed from the operating relay.

Relay testing and wiring checks in the field are greatly simplified.

In the larger plug couplers two moulded clamping pieces, Reference 2, are applied to the relay top plate. Clamping screws, References 12 or 12a, are assembled to the coupler so that by alternately turning them clockwise into the clamping pieces the coupler is drawn down to its seat. Turning counterclockwise will gradually unseat the coupler.

Complete units and detail parts for plug couplers for all DN-11, DN-11B, DN-11L and DN-11P relays are shown on this catalog plate.

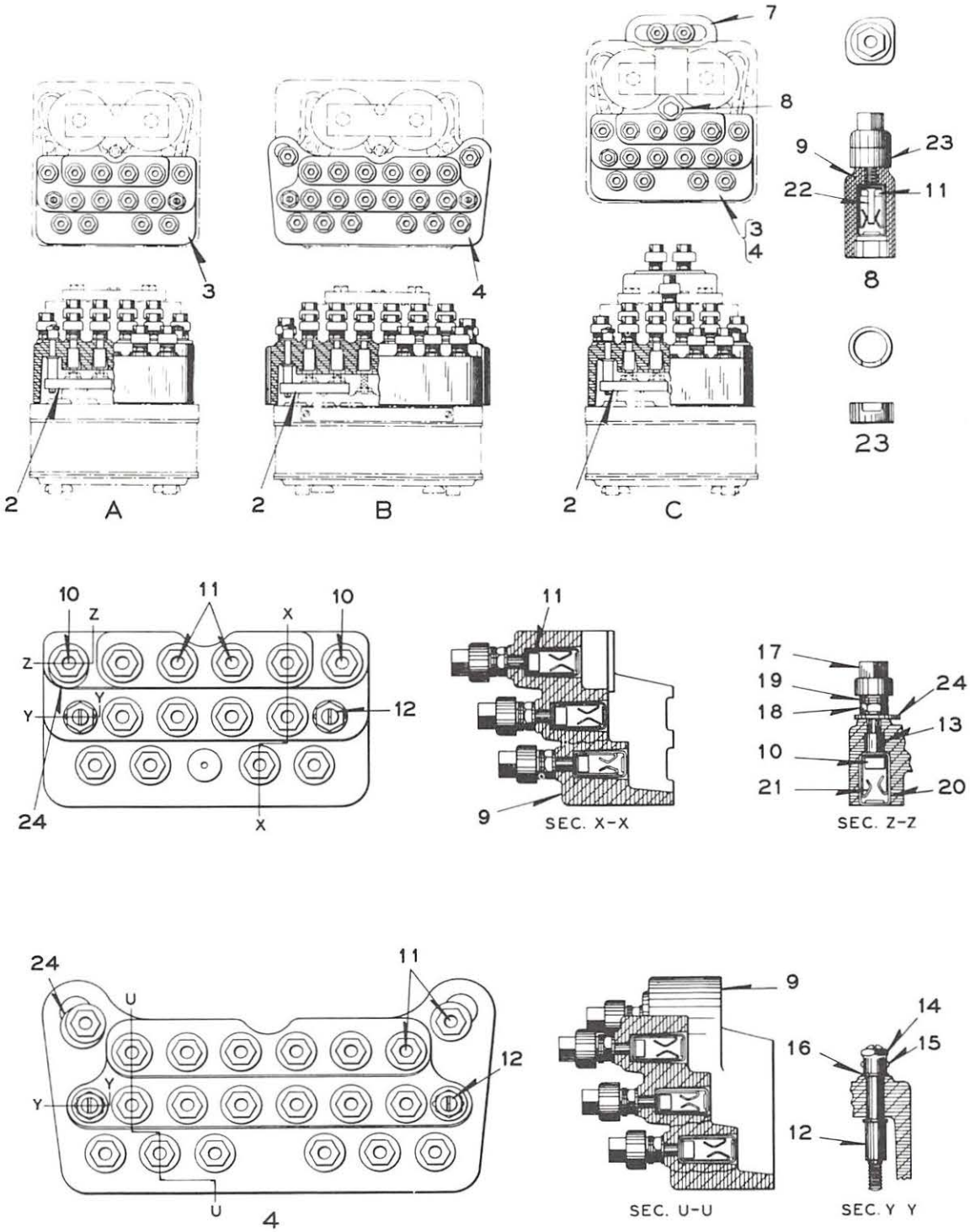

PLUG COUPLERS FOR STYLE DN-11, DN-11B, DN-11L AND DN-11P RELAYS

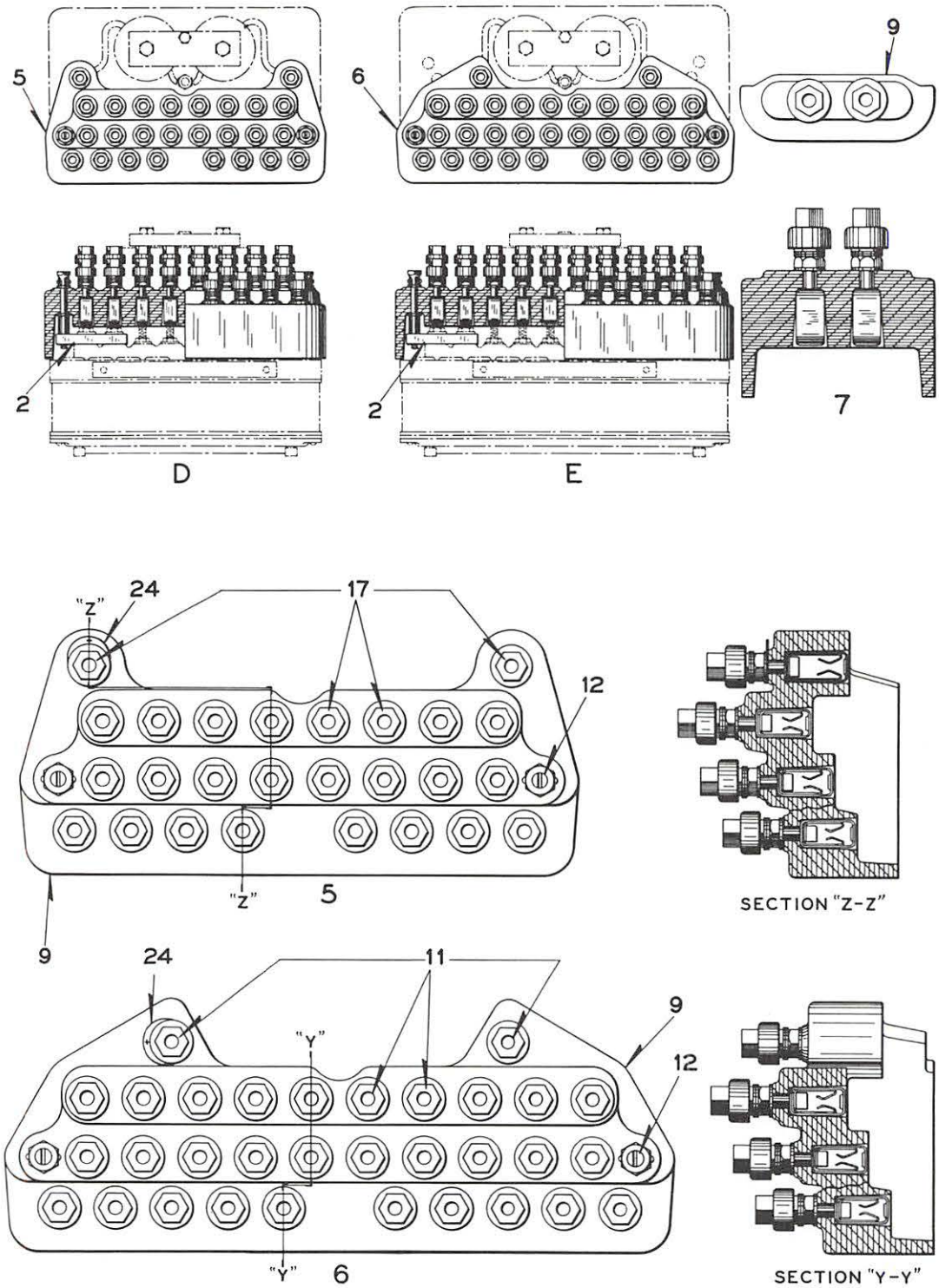

PLUG COUPLERS FOR STYLE DN-11, DN-11B, DN-11L AND DN-11P RELAYS

PLUG COUPLERS

FOR STYLE DN-11, DN-11B, DN-11L AND DN11P RELAYS

Assemblies and Detail Parts

All binding posts fitted with insulating nuts, terminal nuts and washers. Insulating Sleeve Ref. 23 is supplied with Plug Coupler Ref. 8 only, if desired for other Plug Couplers orders should so state.

Indented item descriptions indicate that the references in the "Used On" column refer to this Plate, E1-9. All other references refer to Plates E1-1, E1-3 and E1-5.

Order by Plate, Reference, Piece and Abbreviated Description

REF.	PIECE	DESCRIPTION	DRAWING	USED ON
A	UN108879	Plug Coupler Complete and Clamping Pieces (4 point relays)	C16749-1	Standard 4 point relays
B	UN221084	Plug Coupler Complete and Clamping Pieces (6 point relays)	C16749-4	Standard 6 point relays
C	UN226855	Plug Coupler Complete and Clamping Pieces (4 point relays with resistor and back strap terminals)	C16749-1	4 point relays
Ca	UN313581	Plug Coupler Complete and Clamping Pieces (4 point relays with "+" middle terminal and "L-" back strap terminals)	C16749-1	4 point DN-11L relays
Cb	UN226609	Plug Coupler Complete and Clamping Pieces (4 point relays with back strap terminals)	C16749-1	4 point relays
Cc	UN226608	Plug Coupler Complete and Clamping Pieces (4 point relays with resistor terminal)	C16749-1	4 point relays
Cd	UN226611	Plug Coupler Complete and Clamping Pieces (6 point relays with back strap terminals)	C16749-4	6 point relays
Ce	UN226610	Plug Coupler Complete and Clamping Pieces (6 point relays with resistor terminal)	C16749-4	6 point relays
D	UN223177	Plug Coupler Complete and Clamping Pieces (8 point relays)	C16749-9	8 point relays
E	UN223175	Plug Coupler Complete and Clamping Pieces (10 point relays)	C16749-8	10 point relays
2	UM108875	. Clamping Piece	12770-25	A thru E
3	UN108878	. Plug Coupler Complete (as shown)	C16749-1	A,C thru Cc
4	UN221083	. Plug Coupler Complete (as shown)	C16749-4	B, Cd, Ce
5	UN223176	. Plug Coupler Complete (as shown)	C16749-9	D
6	UN223174	. Plug Coupler Complete (as shown)	C16749-8	E
7	UN222179	. Plug Coupler Complete (as shown)	C16749-6	C, Cb, Cd

REF.	PIECE	DESCRIPTION	DRAWING	USED ON
8	UN226607	. Plug Coupler Complete (as shown)	C16749-17	C,Cc,Ce
8a	UN243026	. Plug Coupler Complete with tag marked + (as shown)	C16749-17	Ca
8b	UN313580	. Plug Coupler Complete with tag marked L- (as shown)	C16749-17	Ca
9	UJ77813	. . Plug Coupler Body	C16750-1	3
9a	UM221225	. . Plug Coupler Body	C16750-5	4
9b	UM223021	. . Plug Coupler Body	C16750-11	5
9c	UM222976	. . Plug Coupler Body	C16750-10	6
9d	UM222173	. . Plug Coupler Body	C16750-6	7
9e	UJ78270	. . Plug Coupler Body	12770-35	8, 8a, 8b
10	UM199852	. . Binding Post	8094-2207	3
11	UM122489	. . Binding Post	8094-1192	3 thru 8b
12	UM108877	. . Screw	8109-300	3
12a	UM221228	. . Screw	8109-300	4, 5, 6
13	UM216194	. . Spacer	8350-856	3
14	UM108876	. . Sleeve	8350-946	3 thru 6
15	UM54912	. . Rivet	10301-1	3 thru 6
16	UM216197	. . Washer	7828-401	3 thru 6
17	UM105713	. . Insulating Nut	12770-1	3 thru 8b
18	UM127260	. . Nut	8109-194	3 thru 8b
19	UM29102	. . Washer	7828-139	3 thru 8b
20	UM216192	. . Receptacle	11893-883	3 thru 8b
21	UM328971	. . Contact Spring	8385-3002	3 thru 8b
22	UM226411	. . Contact Spring	8385-2721	8 thru 8b
23	UM224689	. . Insulating Sleeve	8095-752	8
24	UM142777	. . Tag (Orders should specify marking desired)	8988-75A	3 thru 6 8a, 8b

STYLE DN-18, DN-18A, DN-19 AND DN-19A NEUTRAL D.C. RELAYS

This series of shelf-type relays provides drop-away and pick-up characteristics for signal circuit applications requiring the introduction of time intervals. These relays are a modification of the Union Style DN-11 but make use of copper tubes and an adjustable magnetic shunt separately or in combination to provide the time characteristics desired.

Three combinations of pick-up and drop-away are available; slow pick-up, slow drop-away; slow pick-up, ordinary drop-away; and slow drop-away, ordinary pick-up.

APPLICATION

The DN-18 is particularly applicable for use in APB Signaling and in CTC Systems. The DN-19 is used in Crossing Gate Control and other special traffic control work.

When it is desired to use these relays in special circuit applications, consult our District Sales Office.

RELAY FEATURES

Mounted on spring shock absorbers.

Easily adaptable for wall mounting.

Contacts are sealed in tight clear plastic enclosure.

Binding posts are at different levels to facilitate making connections.

Meets applicable AAR requirements.

CONTACTS

Standard contacts are silver to silver-impregnated carbon front and silver to silver back. Also available are silver to silver-impregnated carbon front and back, high voltage, and heavy duty contacts.

Contact Capacity: 4 amperes up to 30 volts D.C. or 175 volts A.C.
15 amperes (heavy duty) up to 30 volts A.C. or D.C.

MOUNTING

Shock absorbers (Ref. 33) are included with each relay. Orders should specify if wall mounting brackets (Ref. 64) are desired.

PLUG COUPLERS

Plug Couplers permit the removal and replacement of relays without disconnecting any wiring.

Complete units and detail parts for Plug Couplers applicable to the DN-18, DN-18A, DN-19 and DN-19A relays may be found on Plate E1-12.

UNION SWITCH & SIGNAL
DIVISION OF WESTINGHOUSE AIR BRAKE COMPANY

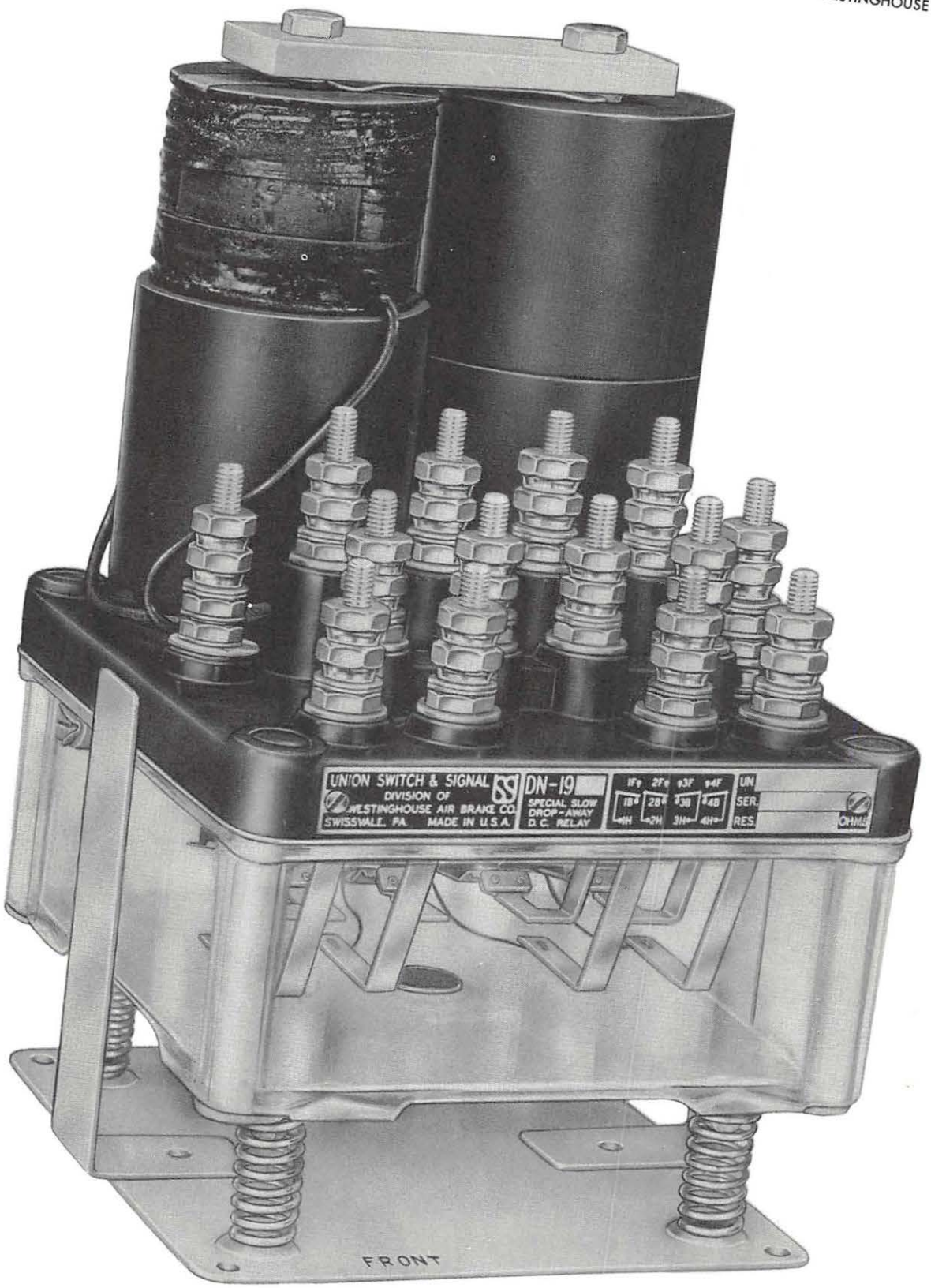

Height 9-5/8", Width 6-11/32", Depth 6-19/64" (4 point shown)
Height 9-5/8", Width 7-23/32", Depth 6-19/64" (6 point)
STYLE DN-19 NEUTRAL D.C. RELAY

STYLE DN-18, DN-18A, DN-19 AND DN-19A NEUTRAL D.C. RELAYS

Refer to Plate E1-10.1 for relay details
and Plate E1-12 for plug couplers.

CONTACT DESCRIPTION:

Std. = Low voltage, silver to silver impregnated carbon front and silver to silver back contacts.

S.I.C. = Low voltage, silver to silver impregnated carbon front and back contacts.

H.D. = Low voltage, heavy duty (15 amp. capacity) silver to silver - impregnated carbon front and silver to silver back contacts.

H.V. = High voltage, silver impregnated carbon to silver impregnated carbon front and back contacts.

Order by Plate, Reference, Piece and Abbreviated Description

Style DN-18 Slow Pick-Up Ordinary Drop-Away
4 Point Neutral D.C. Relay

REF.	PIECE	COIL RESISTANCE (OHMS)	CONTACTS	MINIMUM PICK-UP TIME	DRAWING
A	UN197217	1370 per pair	4F-4B Std.	1.1 Seconds at 8 Volts	C9077-74
Aa	UN196833	2200 per pair	4F-4B Std.	1.0 Second at 10 Volts	C9077-74
Ab	UN190577	3000 per pair	4F-4B Std.	1.0 Second at 12 Volts	C9077-74
Ac	UN214135	1370 per pair	4F-4B S.I.C.	1.1 Seconds at 8 Volts	C9077-74
Ad	UN215533	3000 per pair	4F-4B S.I.C.	1.0 Second at 12 Volts	C9077-74

Style DN-18A Slow Pick-Up Ordinary Drop-Away
4 Point Neutral D.C. Relay

REF.	PIECE	COIL RESISTANCE (OHMS)	CONTACTS	MINIMUM PICK-UP TIME	DRAWING
B	UN318963	1370 per pair	4F-4B Std.	1.4 Seconds at 8 Volts	C9077-135
Ba	UN318962	2200 per pair	4F-4B Std.	1.4 Seconds at 10 Volts	C9077-135
Bb	UN318964	3000 per pair	4F-4B Std.	1.4 Seconds at 12 Volts	C9077-135

Style DN-18 Slow Pick-Up Slow Drop-Away
4 Point Neutral D.C. Relay

REF.	PIECE	COIL RES. (OHMS)	CONTACTS	MINIMUM PICK-UP TIME	MINIMUM DROP-AWAY TIME	DRAWING
C	UN172633	225	4F-4B Std.	2.3 Secs. at 8V.	1.1 Secs. at 8V.	C9077-74
Ca	UN172634	350	4F-4B Std.	2.3 Secs. at 10V.	1.1 Secs. at 10V.	C9077-74
Cb	UN179492	500	4F-4B Std.	2.3 Secs. at 12V.	1.1 Secs. at 12V.	C9077-74
Cc	UN217776	225	4F-4B H.V.	2.3 Secs. at 8V.	1.1 Secs. at 12V.	C9077-74

REF.	PIECE	COIL RES. (OHMS)	CONTACTS	MINIMUM PICK-UP TIME	MINIMUM DROP-AWAY TIME	DRAWING
Cd	UN226581	350	4F-4B S.I.C.	2.3 Secs. at 10V.	1.1 Secs. at 10V.	C9077-74
Ce	UN225482	500	4F-4B S.I.C.	2.3 Secs. at 12V.	1.1 Secs. at 12V.	C9077-74

Style DN-19 Ordinary Pick-Up Slow Drop-Away
4 Point Neutral D.C. Relay

REF.	PIECE	COIL RES. (OHMS)	CONTACTS	DROP-AWAY TIME	DRAWING
D	UN179495	225	4F-4B Std.	2.75-3.5 Secs. at 8V	C9077-87
Da	UN187950	350	4F-4B Std.	2.75-3.5 Secs. at 10.4V	C9077-87
Db	UN186878	500	4F-4B Std.	2.75-3.5 Secs. at 12.5V	C9077-87
Dc	UN214872	225	4F-4B H.V.	2.75-3.5 Secs. at 8V	C9077-87
Dd	UN268862	225	4F-4B S.I.C.	2.75-3.5 Secs. at 8V	C9077-87
De	UN273824	350	4F-4B S.I.C.	2.75-3.5 Secs. at 10.4V	C9077-87

Style DN-19A Special Slow Drop-Away
4 Point Neutral D.C. Relay

REF.	PIECE	COIL RES. (OHMS)	CONTACTS	DROP-AWAY TIME	DRAWING
E	UN331643	225	4F-4B Std.	4-5 Secs. at 10V	C9077-136
Ea	UN336023	225	4F-4B H.D.	2.75-4.25 Secs. at 10V	C9077-136

Style DN-18 Slow Pick-Up Ordinary Drop-Away
6 Point Neutral D.C. Relay

REF.	PIECE	COIL RES. (OHMS)	CONTACTS	MINIMUM PICK-UP TIME	DRAWING
F	UN281888	1370 per pair	6F-6B Std.	1.1 Seconds at 8 Volts	C9077-73
Fa	UN183895	2200 per pair	6F-6B Std.	1.0 Second at 10 Volts	C9077-73
Fb	UN213987	3000 per pair	6F-6B Std.	1.0 Second at 12 Volts	C9077-73
Fc	UN215565	3000 per pair	6F-6B S.I.C.	1.0 Second at 12 Volts	C9077-73

Style DN-18 Slow Pick-Up Slow Drop-Away
6 Point Neutral D.C. Relay

REF.	PIECE	COIL RES. (OHMS)	CONTACTS	MINIMUM PICK-UP TIME	MINIMUM DROP-AWAY TIME	DRAWING
G	UN174008	225	6F-6B Std.	2.3 Secs. at 8V.	1.1 Secs. at 8V.	C9077-73
Ga	UN172878	350	6F-6B Std.	2.3 Secs. at 10V.	1.1 Secs. at 10V.	C9077-73
Gb	UN174157	500	6F-6B Std.	2.3 Secs. at 12V.	1.1 Secs. at 12V.	C9077-73
Gc	UN220940	350	6F-6B S.I.C.	2.3 Secs. at 10V.	1.1 Secs. at 10V.	C9077-73
Gd	UN237166	500	6F-6B S.I.C.	2.3 Secs. at 12V.	1.1 Secs. at 12V.	C9077-73

Style DN-19 Ordinary Pick-Up Slow Drop-Away 6 Point Neutral D.C. Relay					
REF.	PIECE	COIL RES. (OHMS)	CONTACTS	DROP-AWAY TIME	DRAWING
H	UN187723	225	6F-6B Std.	2 Secs. at 9.2V.	C9077-88
Ha	UN207023	350	6F-6B Std.	2 Secs. at 12.01V.	C9077-88
Hb	UN220188	500	6F-6B Std.	2 Secs. at 14.4V.	C9077-88
Hc	UN226215	225	6F-6B S.I.C.	2 Secs. at 9.2V.	C9077-88
Hd	UN228225	500	6F-6B H.V.	2 Secs. at 14.4V	C9077-88

STYLE DN-22 AND DN-22A NEUTRAL D.C. RELAYS

The DN-22 is a quick shunting track relay, especially useful in applications where light equipment is in use at high speeds. The DN-22A is a line relay available either as an ordinary acting or slow drop-away type.

When it is desired to use these relays in special circuit applications, consult our District Sales Office.

FEATURES

Small size with coils front and back instead of side by side.

Liberal air gap is provided in magnetic circuit.

Base is one piece construction without openings.

All openings in top plate are securely sealed.

Armature dead weight torque 50% greater than A. A. R. requirements.

CONTACTS

Standard contacts are silver to silver-impregnated carbon front and silver to silver back. Also available are silver to silver-impregnated carbon front and back, high voltage, and heavy duty contacts.

Contact Capacity: 4 amperes up to 30 volts, D.C. or 175 volts A.C.
15 amperes (heavy duty) up to 30 volts A.C. or D.C.

MOUNTING

Shock absorbers (Ref. 30) are included with each relay. Orders should specify if wall mounting brackets (Ref. 36) are desired.

PLUG COUPLERS

Plug Couplers permit the removal and replacement of relays without disconnecting any wiring.

Complete units and detail parts for Plug Couplers applicable to the DN-22 and DN-22A relays may be found on Plate E1-27.

Height 8 - 1/8", Width 4", Depth 6 - 3/8" (DN-22 shown)

Height 8 - 9/32", Width 4", Depth 6 - 3/8" (DN-22A)

STYLE DN-22 AND DN-22A NEUTRAL D.C. RELAYS

STYLE DN-22 AND DN-22A NEUTRAL D.C. RELAYS

Refer to Plate E1-20.1 for relay details and Plate E1-27 for Plug Couplers.

Contact Description:

Std. = Low voltage, silver to silver-impregnated carbon front and silver to silver back contacts.

S.I.C. = Low voltage, silver to silver-impregnated carbon front and back contacts.

H.D. = Low voltage, heavy duty (15 amp. capacity) silver to silver impregnated carbon front and silver to silver back contacts.

H.V. = High voltage, silver-impregnated carbon to silver-impregnated carbon front and back contacts.

Order by Plate, Reference, Piece and Abbreviated Description

Style DN-22 Ordinary Acting Neutral D.C. Relay 2F-2B Dependent Contacts					
REF.	PIECE	COIL RESISTANCE (OHMS PER PAIR)	CONTACTS	* WORKING ENERGIZATION	DRAWING
A	UN224087	0.5	Std.	0.186 Amps.	C9432-24
Aa	UN284660	1	Std.	0.130 Amps.	C9432-24A
Ab	UN224088	2	Std.	0.093 Amps.	C9432-24
Ac	UN224089	4	Std.	0.065 Amps.	C9432-24

Style DN-22A Ordinary Acting Neutral D.C. Relay 2F-2B Dependent Contacts					
REF.	PIECE	COIL RESISTANCE (OHMS PER PAIR)	CONTACTS	* WORKING ENERGIZATION	DRAWING
B	UN224121	16	Std.	0.0273 Amps.	C9432-25
Ba	UN292014	30	Std.	0.0196 Amps.	C9432-25A
Bb	UN224122	40	Std.	0.0168 Amps.	C9432-25
Bc	UN224123	60	Std.	0.0148 Amps.	C9432-25
Bd	UN224129	250	Std.	1.87 Volts	C9432-25
Be	UN239397	500	Std.	2.50 Volts	C9432-25A
Bf	UN224890	1000	Std.	3.76 Volts	C9432-25
Bg	UN230485	1500	Std.	4.69 Volts	C9432-25A
Bh	UN224382	2000	Std.	5.55 Volts	C9432-25
C	UN257115	500	S.I.C.	2.50 Volts	C9432-25A
Ca	UN256958	1000	S.I.C.	3.76 Volts	C9432-25A
Cb	UN257114	1500	S.I.C.	4.69 Volts	C9432-25A
Cc	UN257112	2000	S.I.C.	5.55 Volts	C9432-25A

REF.	PIECE	COIL RESISTANCE (OHMS PER PAIR)	CONTACTS	* WORKING ENERGIZATION	DRAWING
D	UN251714	1000	H.D.	5.27 Volts	C9432-25A
E	UN267163	500	H.V.	4.50 Volts	C9432-25A
Ea	UN231606	1000	H.V.	6.80 Volts	C9432-25A

Style DN-22A Slow Drop-Away Neutral D.C. Relay 2F-2B Dependent Contacts

REF.	PIECE	COIL RESISTANCE (OHMS PER PAIR)	CONTACTS	* WORKING ENERGIZATION	MINIMUM RELEASE TIME	DRAWING
F	UN224388	250	Std.	3.20 Volts	1 sec. at 5.8V	C9432-25
Fa	UN224389	400	Std.	3.64 Volts	1 sec. at 6.68V	C9432-25
Fb	UN224390	500	Std.	4.55 Volts	1 sec. at 8.35V	C9432-25
Fc	UN224392	1500	Std.	7.20 Volts	1 sec. at 13.0V	C9432-25

Style DN-22A Slow Drop-Away Neutral D.C. Relay 2F-1B Independent Contacts

REF.	PIECE	COIL RESISTANCE (OHMS PER PAIR)	CONTACTS	* WORKING ENERGIZATION	MINIMUM RELEASE TIME	DRAWING
G	UN234820	1500	Std.	7.20 Volts	1 sec. at 13.0V	C9432-25A

* The working energization shown are service specification test values at 70°F. The energization used in applying these relays should be higher than these values but should not exceed 10 watts dissipation per coil.

STYLE DN-22B AND DN-22BH BIASED NEUTRAL D.C. RELAYS

The Style DN-22B relay is particularly suitable for use as a biased neutral line relay, battery checking relay, and for other general circuit applications. It may also be found useful in overcoming problems encountered in the design of special circuits for approach lighting or approach energization. The Style DN-22BH is a high release relay designed specifically for track circuit applications.

FEATURES

Permanent magnet bias.

Responds to current of one polarity only.

Permanent magnets provide neutral armature hold-down when relay is de-energized.

Relay will not pick-up with reverse polarity at 50 times the normal working value.

Armature will not pick-up on either polarity with permanent magnets de-magnetized.

Biased neutral feature provides superior foreign current protection and makes practicable the securing of broken down insulated joint protection by staggering the polarity of adjacent track circuits.

CONTACTS

Silver to silver-impregnated carbon front. Silver to silver back.

Contact Capacity: 4 amperes up to 30 volts D.C. or 175 volts A.C.

MOUNTING

Shock absorbers (Ref. 31) are included with each relay. Orders should specify if wall mounting bracket (Ref. 37) is required.

PLUG COUPLERS

Plug Couplers permit the removal and replacement of relays without disconnecting any wiring.

Complete units and detail parts for Plug Couplers applicable to the DN-22B and DN-22BH may be found on Plate E1-27.

Height 8", Width 4", Depth 6 - 3/8" (DN-22B)

Height 8 - 1/8", Width 4", Depth 6 - 3/8" (DN-22BH shown)

STYLE DN-22B AND DN-22BH BIASED NEUTRAL D.C. RELAYS

STYLE DN-22B AND DN-22BH BIASED NEUTRAL D.C. RELAYS

Refer to Plate E1-22.1 for relay details and Plate E1-27 for Plug Couplers.

Order by Plate, Reference, Piece and Abbreviated Description

Style DN-22B Ordinary Acting Biased Neutral D.C. Relay					
REF.	PIECE	COIL RESISTANCE (OHMS PER PAIR)	CONTACTS	*WORKING ENERGIZATION	DRAWING
A	UN272937	500	2F-2B	3.09 Volts	C9432-31
Aa	UN~~272836~~ 272936	1000	2F-2B	4.65 Volts	C9432-31
Ab	UN270587	1500	2F-2B	5.80 Volts	C9432-31

Style DN-22BH High Drop-Away Biased Neutral D.C. Relay					
REF.	PIECE	COIL RESISTANCE (OHMS PER PAIR)	CONTACTS	*WORKING ENERGIZATION	DRAWING
B	UN268030	0.5	2F-2B	0.32 Amps.	C9432-32
Ba	UN276247	4	2F-2B	0.115 Amps.	C9432-32

* The working energization shown are service specification test values at 70°F. The energization used in applying these relays should be higher than these values but should not exceed 10 watts dissipation per coil.

STYLE DN-22P POWER TRANSFER RELAY

The Style DN-22P relay was developed especially for power transfer service in connection with highway crossing protection. It consists of a D.C. Style DN-22 relay having special features in the design of its contact structure and magnetic circuit to make it especially suitable to this special service. An addition of a rectifier permits its operation from the normal A.C. supply.

FEATURES

Non-fusible contacts.

Positive drop-away and positive pick-up.

Definite under-voltage release when the line voltage drops to approximately 70% normal.

Good voltage characteristics under wide changes in temperature.

Liberal air gap.

Meets AAR requirements.

MOUNTING

Shock absorbers (Ref. 30) are furnished with each relay. Wall mounting brackets (Ref. 34) are not included and orders should specify if desired.

CONTACTS

Silver to silver-impregnated carbon front and back.

Contact capacity: 15 amperes per contact.

PLUG COUPLERS

Plug Couplers permit the removal and replacement of relays without disconnecting any wiring.

Complete units and detail parts for Plug Couplers applicable to DN-22P relay may be found on Plate E1-27.

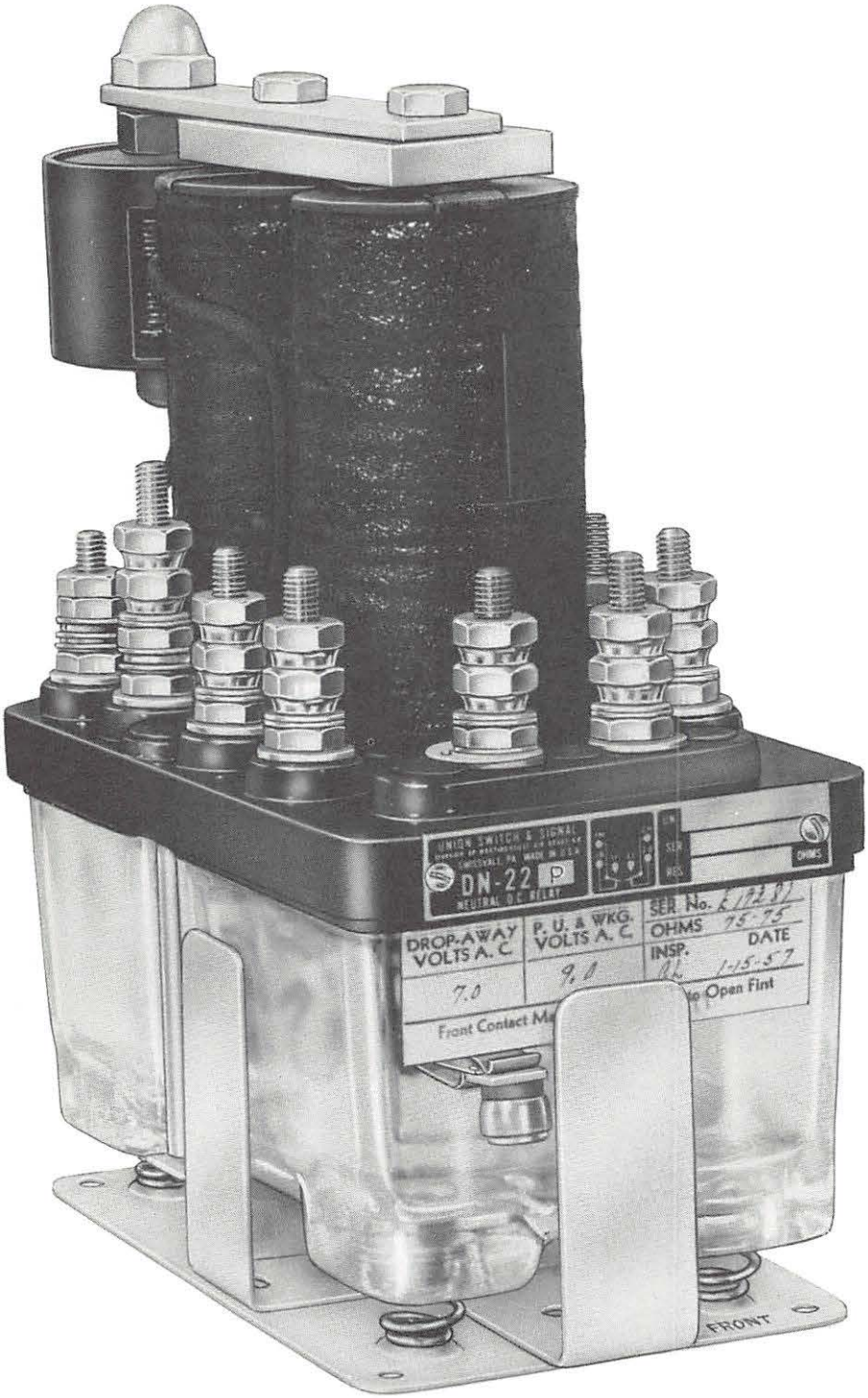

Height 8 - 9/32", Width 4", Depth 8"

STYLE DN-22P POWER TRANSFER RELAY

STYLE DN-22P POWER TRANSFER RELAY

Refer to Plate E1-24.1 for relay details and Plate E1-27 for Plug Couplers.

Order by Plate, Reference, Piece and Abbreviated Description

REF.	PIECE	CONTACTS	A. C. VOLTS			COIL RESISTANCE (OHMS)	DRAWING
			OPERA-TING	DROP-AWAY	PICK-UP		
A	UN224023	2F-2B L.V.	8	5.6	7.2	45-45	C9432-20
Aa	UN223526	2F-2B L.V.	10	7.0	9.0	75-75	C9432-20
Ab	UN224029	2F-2B L.V.	12	8.4	10.8	125-125	C9432-20

STYLE DN-26 RETAINED-NEUTRAL NEUTRAL D.C. RELAY

The DN-26 relay is a neutral relay that will retain its armature in the energized position when the polarity of the associated control circuit is changed. This retaining function is accomplished by the transfer of energy magnetically through a third core to the armature during the time of polarity reversal.

APPLICATION

The Style DN-26 may be used with Style DN-22B for controlling double track Automatic Block Signaling Systems.

May also be used in combination with polarity responsive devices such as polarized relays and searchlight signal mechanisms.

Other applications include approach locking, approach lighting, annunciator control, etc.

FEATURES

Mounted on spring shock absorbers.

Can be used in series or in multiple with other types of relays with little effect upon the retaining characteristics.

Slow pick-up and slow drop-away.

Ruggedly constructed to assure maximum service life.

Not only bridges pole-changing time but also bridges circuit reclosures of the same polarity.

CONTACTS

Standard contacts are silver to silver-impregnated carbon front and silver to silver back. Also available are silver to silver-impregnated carbon front and back contacts.

Contact Capacity: 4 amperes up to 30 volts, D.C. or 175 volts A.C.

MOUNTING

Shock absorbers (Ref. 25) are included with each relay. Orders should specify if wall mounting brackets (Ref. 26) are desired.

PLUG COUPLERS

Plug Couplers permit the removal and replacement of relays without disconnecting any wiring.

Complete units and detail parts for Plug Couplers applicable to the DN-26 relay may be found on Plate E1-33.

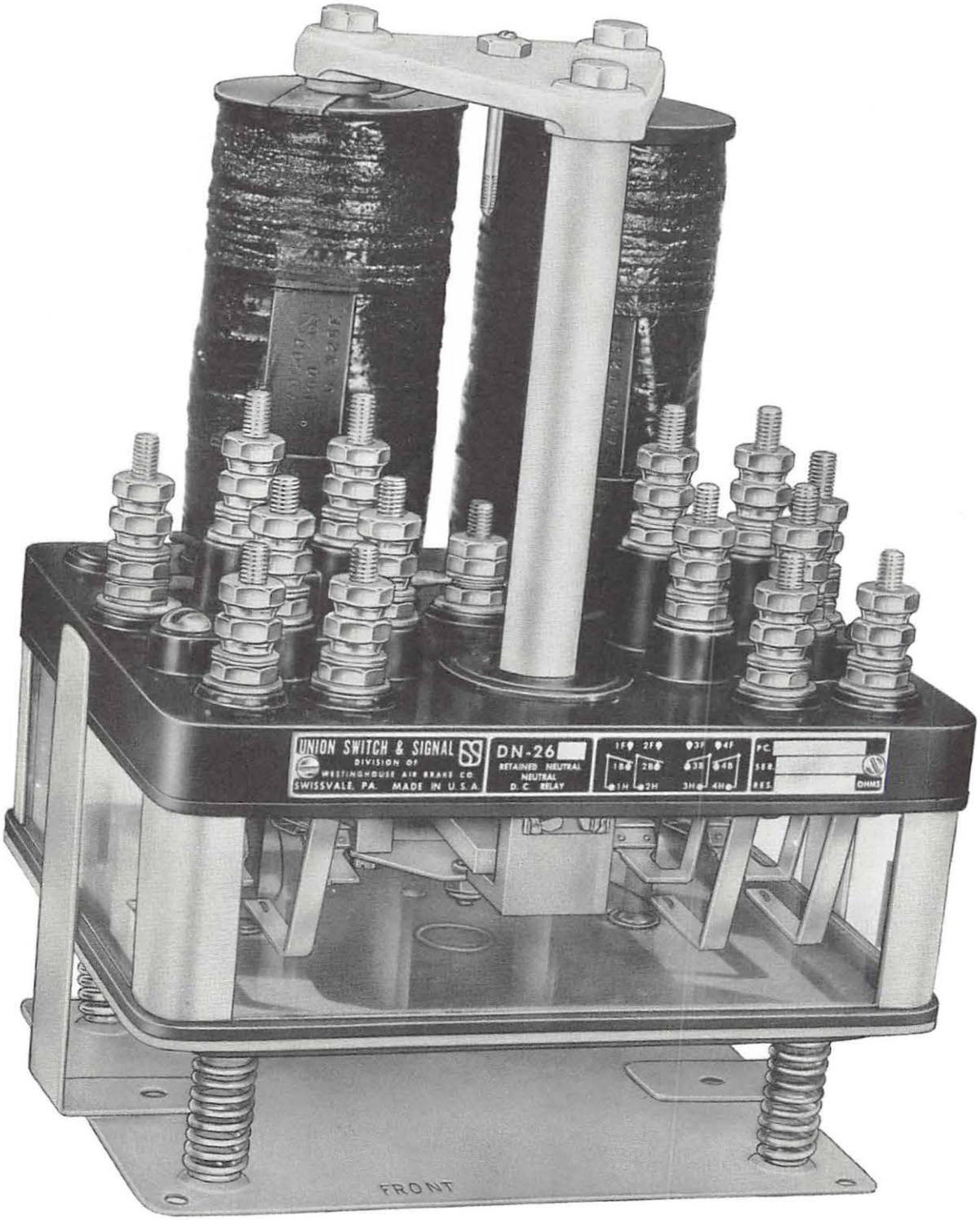

Height 9", Width 7 - 5/8", Depth 6 - 1/4"

STYLE DN-26 RETAINED - NEUTRAL NEUTRAL D.C. RELAY

STYLE DN-26 RETAINED-NEUTRAL NEUTRAL D.C. RELAY

Refer to Plate E1-30.1 for relay details and Plate E1-33 for Plug Couplers.

Contact Description:

Std. = Low voltage, silver to silver-impregnated carbon front and silver to silver back contacts.

S.I.C. = Low voltage, silver to silver-impregnated carbon front and back contacts.

REF.	PIECE	COIL RESISTANCE (OHMS PER PAIR)	CONTACTS	RECOMMENDED MINIMUM ENERGIZATION FOR 0.2 SEC. POLE CHANGING TIME	DRAWING
A	UN278415	240	4F-4B Std.	3.78 Volts	C16940-2
Aa	UN296605	240	4F-4B S.I.C.	3.78 Volts	C16940-2
Ab	UN278417	600	4F-4B Std.	6.06 Volts	C16940-2

STYLE DP-14 FOUR POINT POLARIZED RELAY

The Style DP-14 Polarized Relay uses the same basic structure as the Style DN-11 Relay but has several design features to meet the requirements for general use in polarized track or line circuits. It features simplicity of construction and superior calibration.

FEATURES

Meets all applicable AAR requirements.

Contacts are sealed in tight clear enclosure.

Binding posts are at different levels to facilitate making connections and tracing circuits.

Large permanent magnet provides greater clearances between moving parts and higher polar contact pressure.

Polar armature remains in last energized position and maintains full pressure on polar contacts.

Mounted on spring shock absorbers.

Easily adapted for wall mounting.

CONTACTS

Neutral contacts are low voltage silver to silver-impregnated carbon front and silver to silver back.

Polar contacts are silver to silver-impregnated carbon normal and reverse.

Contact capacity: 4 amperes up to 30 volts D.C. or 175 volts A.C.

MOUNTING

Shelf type shock absorbers are included with each relay. Orders should specify if wall mounting brackets are desired.

PLUG COUPLERS

Plug Couplers permit the removal and replacement of relays without disconnecting any wiring.

Complete units and detail parts for Plug Couplers applicable to the DP-14 relay may be found on Plate E1-1003.

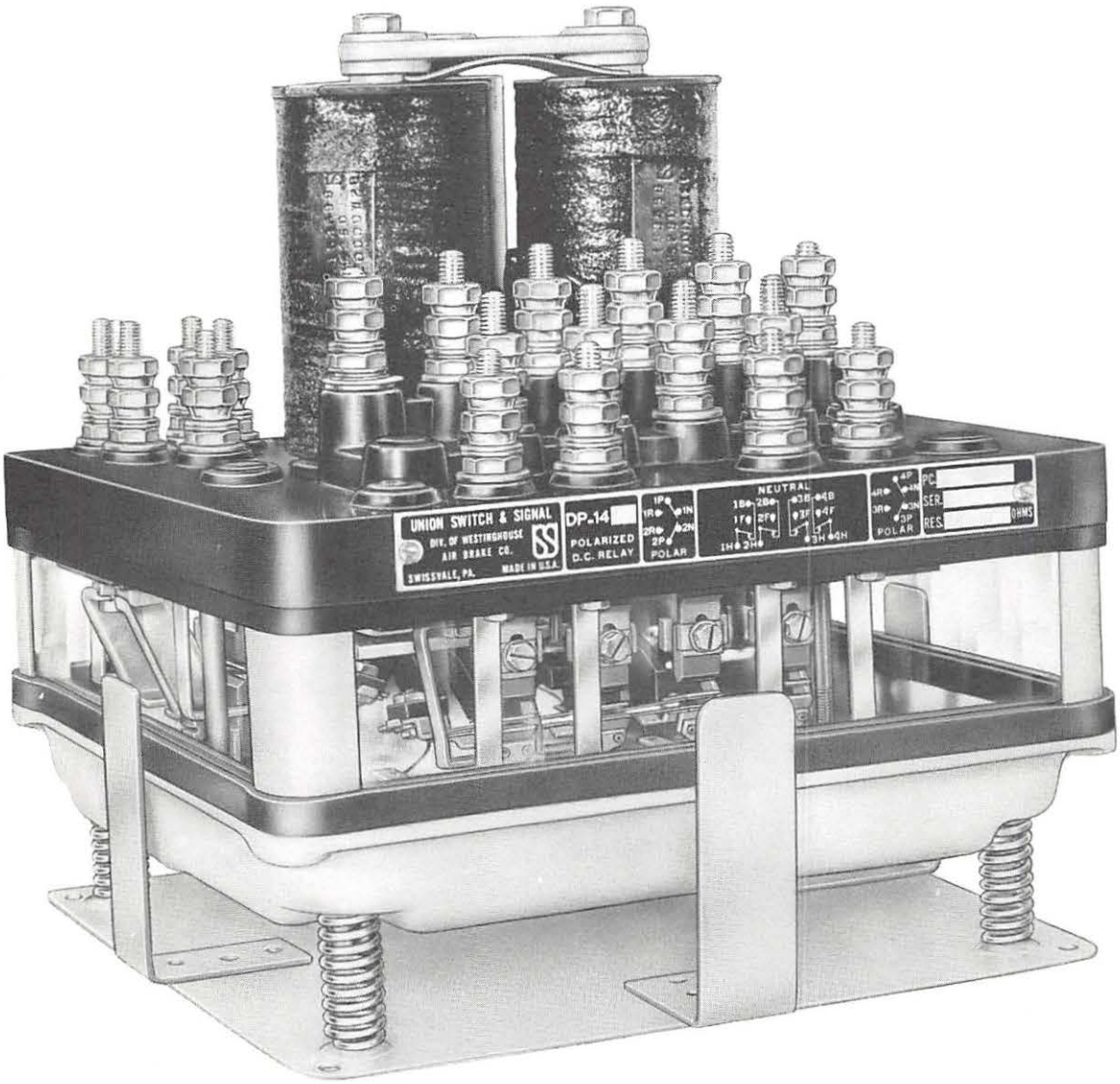

Height 9-7/8", Width 7-3/8", Depth 7-3/4" (With 2N-2R Polar Contacts)

Height 9-5/8", Width 9", Depth 9" (With 4N-4R Polar Contacts, Shown)

STYLE DP-14 FOUR POINT POLARIZED RELAY

STYLE DP-14 FOUR POINT POLARIZED RELAY

Refer to Plate E1-1000.1 for relay details and Plate E1-1003 for Plug Couplers.

CONTACT DESCRIPTION:

Neutral contacts are low voltage silver to silver-impregnated carbon front and silver to silver back.
Polar contacts are silver to silver-impregnated carbon normal and reverse.

* For the relays without neutral armature the working energization refers to the reversal of the polar armature. For relays with neutral armature at the working energization the open circuit time of the neutral contacts on polarity change may be 1.35 seconds, at 33 per cent greater energy the open circuit time will be reduced to 0.9 seconds.

The working energizations shown are service specifications test values at 70°F. The energization used in applying these relays should be higher than these values but should not exceed 10 watts dissipation per coil.

Order by Plate, Reference, Piece and Abbreviated Description

Style DP-14 Four Point Ordinary Acting Polarized Relay With Two Normal And Two Reverse Polar Contacts						
REF.	PIECE	COIL RESISTANCE (OHMS PER PAIR)	NEUTRAL CONTACTS	POLAR CONTACTS	* WORKING ENERGIZATION	DRAWING
A	UN159139	2	4F-4B	2N-2R	0.145 Amp.	C9270-4
Aa	UN159902	4	4F-4B	2N-2R	0.105 Amp.	C9270-4
Ab	UN294218	10	Without	2N-2R	0.031 Amp.	C9270-15
Ac	UN166252	100	4F-4B	2N-2R	2.39 Volts	C9270-4
Ad	UN169368	250	4F-4B	2N-2R	3.92 Volts	C9270-4
Ae	UN159140	500	4F-4B	2N-2R	5.25 Volts	C9270-4
Af	UN159544	670	4F-4B	2N-2R	6.39 Volts	C9270-4
Ag	UN166443	1000	4F-4B	2N-2R	7.89 Volts	C9270-4

Style DP-14 Four Point Ordinary Acting Polarized Relay With Four Normal And Four Reverse Polar Contacts						
REF.	PIECE	COIL RESISTANCE (OHMS PER PAIR)	NEUTRAL CONTACTS	POLAR CONTACTS	* WORKING ENERGIZATION	DRAWING
B	UN311383	10	Without	4N-4R	0.0345 Amp.	C9270-16
Ba	UN239364	11-11	Without	4N-4R	0.046 Amp.	C9270-16
Bb	UN317080	250	Without	4N-4R	1.87 Volts	C9270-16
Bc	UN174609	250	4F-4B	4N-4R	4.10 Volts	C9270-6
Bd	UN170121	500	4F-4B	4N-4R	5.50 Volts	C9270-6
Be	UN163685	670	4F-4B	4N-4R	6.70 Volts	C9270-6
Bf	UN163686	1000	4F-4B	4N-4R	8.26 Volts	C9270-6

STYLE DP-17 AND DP-17A FOUR POINT POLARIZED RELAYS

The DP-17 and DP-17A are polarized relays similar to the DP-14 but with added design features which provide a positive check that the position of the polar armature agrees with the polarity of the control circuit before it is possible for the neutral armature to pick-up. The DP-17A achieves an even higher degree of efficiency through the use of larger coils and an improved backstrap arrangement.

FEATURES

Meets all applicable AAR requirements.

Contacts are sealed in tight clear enclosure.

Binding posts are at different levels to facilitate making connections and tracing circuits.

Mounted on spring shock absorbers.

Easily adapted for wall mounting.

Neutralizing coils prevent the pick-up of the neutral armature if the polar armature does not reverse in response to a change in polarity of the control circuit.

Neutralizing coils permit pick-up of the neutral armature if the position of the polar armature agrees with the polarity of the control circuit.

The neutral armature will not improperly pick-up with the neutralizing circuit open, or with an appreciable change in the air gap between the hold-down pole pieces and the neutral armature.

APPLICATION

Designed for use wherever it is desired to check that the polar armature agrees in position with the polarity of the controlling circuit before permitting the neutral armature to pick up.

The DP-17 is particularly suitable for switch repeater service.

The DP-17A, high efficiency relay, was developed for use as a signal control relay on long line circuits of high resistance. It is also suitable for lower resistance line circuits or as a switch indication relay where a high degree of efficiency is desired.

CONTACTS

Neutral contacts are low voltage silver to silver-impregnated carbon front and silver to silver back.

Polar contacts are silver to silver-impregnated carbon normal and reverse.

Contact capacity: 4 amperes up to 30 volts D.C. or 175 volts A.C.

MOUNTING

Shelf type shock absorbers are included with each relay. Orders should specify if wall mounting brackets are desired.

PLUG COUPLERS

Plug Couplers permit the removal and replacement of relays without disconnecting and wiring.

Complete units and detail parts for Plug Couplers applicable to the DP-17 and DP-17A may be found on Plate E1-1009.

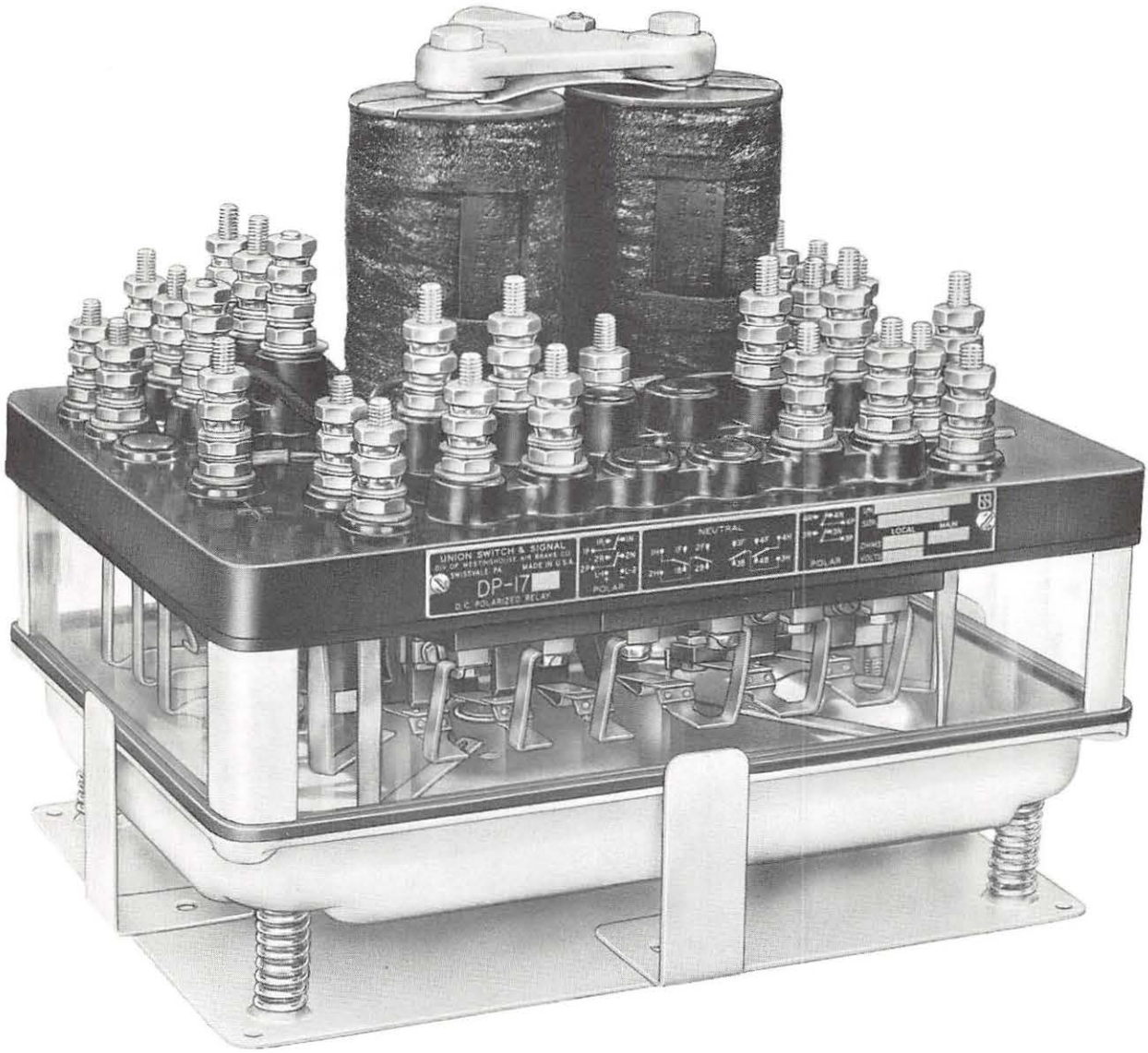

Height 9-1/2", Width 11", Depth 8" (DP-17, Shown)

Height 11", Width 11", Depth 8" (DP-17A)

STYLE DP-17 FOUR POINT POLARIZED RELAY

STYLE DP-17 AND DP-17A FOUR POINT POLARIZED RELAYS

Refer to Plate E1-1007.1 for relay details and Plate E1-1009 for Plug Couplers.

CONTACT DESCRIPTION:

Neutral contacts are low voltage silver to silver-impregnated carbon front and silver to silver back.
Polar contacts are silver to silver-impregnated carbon normal and reverse.

* The working energizations shown are service specification test values at 70°F. The energization used in applying these relays should be higher than these values but should not exceed 10 watts dissipation per coil.

Order by Plate, Reference, Piece and Abbreviated Description

4 Point Style DP-17 Ordinary Acting Polarized Relay
With Four Normal And Four Reverse Polar Contacts.

REF.	PIECE	COIL RESISTANCE (OHMS PER PAIR)		NEUTRAL CONTACTS	POLAR CONTACTS	WORKING ENERGIZATION		DRAWING
		MAIN	NEUT.			*MAIN	NEUT.	
A	UN180809	175	150	4F-4B	4N-4R	5.25V.	8.0V.	C9363-1
Aa	UN191149	250	250	4F-4B	4N-4R	6.05V.	10.0V.	C9363-1
Ab	UN173532	400	300	4F-4B	4N-4R	7.80V.	12.0V.	C9363-1
Ac	UN243531	500	370	4F-4B	4N-4R	9.50V.	15.0V.	C9363-1
Ad	UN212697	1000	600	4F-4B	4N-4R	14.30V.	24.0V.	C9363-1

4 Point Style DP-17A High Efficiency Polarized Relay
With Four Normal And Four Reverse Polar Contacts.

REF.	PIECE	COIL RESISTANCE (OHMS PER PAIR)		NEUTRAL CONTACTS	POLAR CONTACTS	WORKING ENERGIZATION		DRAWING
		MAIN	NEUT.			*MAIN	NEUT.	
B	UN254339	150	250	4F-4B	4N-4R	3.64V.	10.0V.	C9363-5

STYLE DP-20 AND DP-21 RETAINED NEUTRAL POLARIZED RELAYS

The DP-20 and DP-21 are polarized relays similar to the DP-14 but with special design features which retain the neutral armature in a closed position during ordinary periods required to pole change the relay circuit. The DP-21 differs from the DP-20 in that it provides slow pick-up operation of the neutral armature.

FEATURES

Meets all applicable AAR requirements.

Contacts are sealed in tight clear enclosure.

Binding posts are at different levels to facilitate making connections and tracing circuits.

Easy selection of slow drop-away or slow pick-up features.

No additional energy required in track relays to get proper action on pole-changing.

Retained neutral feature eliminates need for slow drop-away repeater relay.

APPLICATION

For all track and line applications requiring a polarized relay which will prevent the release of the neutral armature during current reversals. Particularly suitable as track relays due to low current.

The four point DP-20 may be used to replace an ordinary polarized relay and its attendant slow drop-away relay with reduced power requirements.

The slow pick-up characteristic of the DP-21 permits it to be used without a second special slow pick-up relay in many applications common in APB signaling or to prevent flash of the signal to the rear due to short cars or light equipment passing rapidly from one track circuit to another.

Under some conditions it may be desirable to annul the slow drop-away features of the DP-20 and DP-21 or the slow pick-up of the DP-21. Coil connections are such that this may be accomplished with ease through external circuit selection. This provides great flexibility and an unusually broad field of application.

CONTACTS

Neutral contacts are low voltage silver to silver-impregnated carbon front and silver to silver back.

Polar contacts are silver to silver-impregnated carbon normal and reverse.

Contact capacity: 4 amperes up to 30 volts D.C. or 175 volts A.C.

MOUNTING

Shelf type shock absorbers are included with each relay. Orders should specify if wall mounting brackets are desired.

PLUG COUPLERS

Plug Couplers permit the removal and replacement of relays without disconnecting any wiring.

Complete units and detail parts for Plug Couplers applicable to the DP-20 and DP-21 relays may be found on Plate E1-1013.

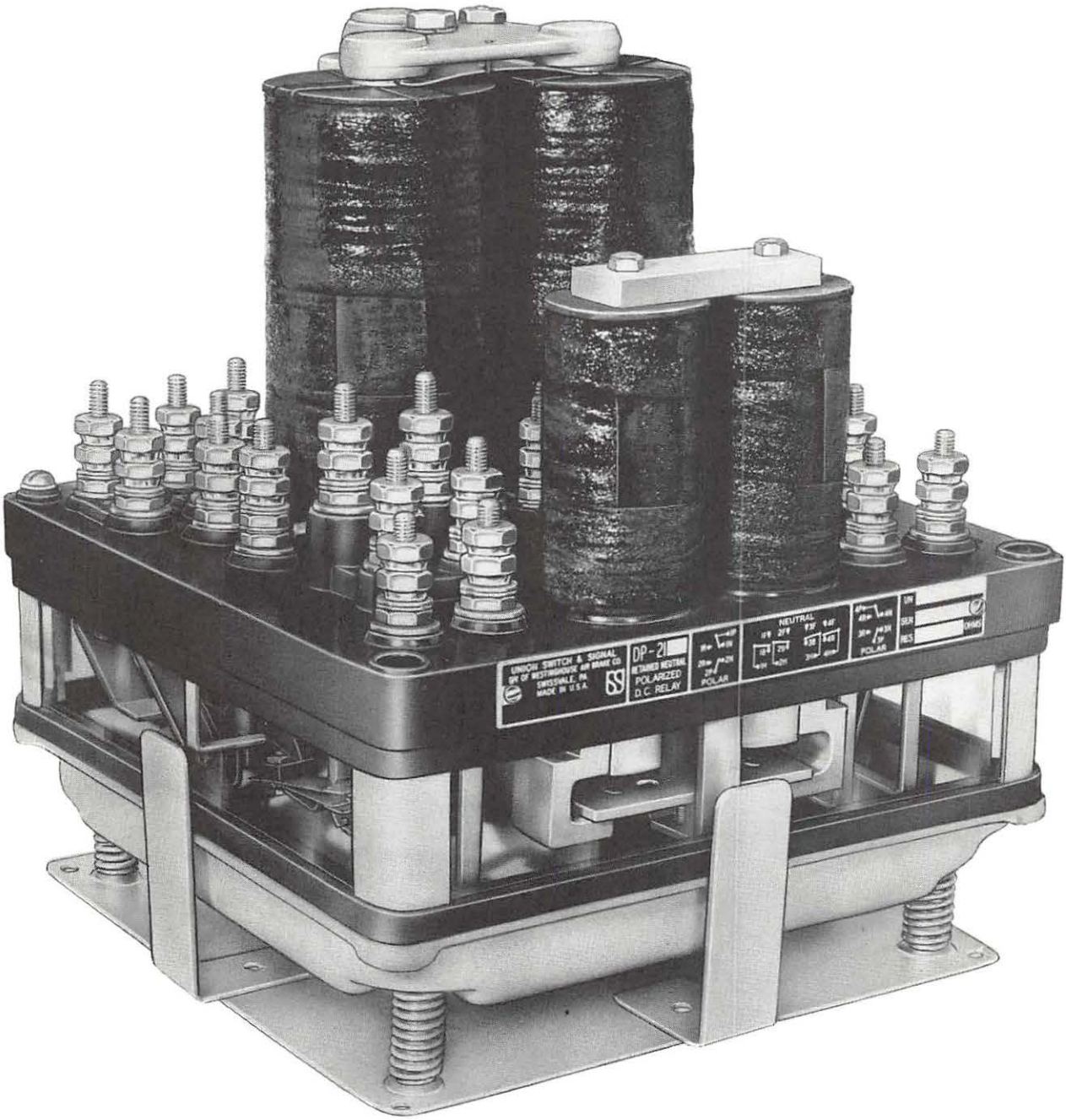

Height 10-1/2", Width 9", Depth 9" (Four Point Shown)

Height 10-1/2", Width 10", Depth 9" (Six Point)

STYLE DP-21 RETAINED NEUTRAL POLARIZED RELAY

STYLE DP-20 AND DP-21 RETAINED NEUTRAL POLARIZED RELAYS

Refer to Plate E1-1010.1 for relay details and Plate E1-1013 for Plug Couplers.

CONTACT DESCRIPTION:

Neutral contacts are low voltage silver to silver-impregnated carbon front and silver to silver back.
Polar contacts are silver to silver-impregnated carbon normal and reverse.

* The working energizations shown are service specifications test values at 70°F. The energizations used in applying these relays should be higher than these but should not exceed 10 watts dissipation per coil.

Order by Plate, Reference, Piece and Abbreviated Description

Four Point Style DP-20 Retained Neutral Polarized Relay
With Two Normal And Two Reverse Polar Contacts

REF.	PIECE	COIL RESISTANCE (OHMS PER PAIR) MAIN	AUX.	NEUTRAL CONTACTS	POLAR CONTACTS	* WORKING ENERGIZATION	DRAWING
A	UN184556	4	110	4F-4B	2N-2R	0.095 Amp.	C9407-5
Aa	UN184157	400	270	4F-4B	2N-2R	4.35 Volts	C9407-5
Ab	UN181563	670	270	4F-4B	2N-2R	5.40 Volts	C9407-5

Four Point Style DP-20 Retained Neutral Polarized Relay
With Four Normal And Four Reverse Polar Contacts

REF.	PIECE	COIL RESISTANCE (OHMS PER PAIR) MAIN	AUX.	NEUTRAL CONTACTS	POLAR CONTACTS	* WORKING ENERGIZATION	DRAWING
B	UN239654	4	110	4F-4B	4N-4R	0.095 Amp.	C9407-5
Ba	UN196924	250	270	4F-4B	4N-4R	3.29 Volts	C9407-5
Bb	UN207263	400	270	4F-4B	4N-4R	4.35 Volts	C9407-5
Bc	UN181562	670	270	4F-4B	4N-4R	5.40 Volts	C9407-5

Four Point Style DP-21 Retained Neutral Polarized Relay
With Two Normal And Two Reverse Polar Contacts

REF.	PIECE	COIL RESISTANCE (OHMS PER PAIR) MAIN	AUX.	NEUTRAL CONTACTS	POLAR CONTACTS	* WORKING ENERGIZATION	DRAWING
C	UN230117	1	110	4F-4B	2N-2R	0.190 Amp.	C9407-7
Ca	UN199855	2	110	4F-4B	2N-2R	0.131 Amp.	C9407-7
Cb	UN217564	150	270	4F-4B	2N-2R	2.50 Volts	C9407-7
Cc	UN187490	250	270	4F-4B	2N-2R	3.29 Volts	C9407-7
Cd	UN187018	400	270	4F-4B	2N-2R	4.35 Volts	C9407-7
Ce	UN189627	670	270	4F-4B	2N-2R	5.40 Volts	C9407-7
Cf	UN329937	1000	270	4F-4B	2N-2R	6.90 Volts	C9407-7

Four Point Style DP-21 Retained Neutral Polarized Relay With Four Normal And Four Reverse Polar Contacts							
REF.	PIECE	COIL RESISTANCE (OHMS PER PAIR) MAIN	COIL RESISTANCE (OHMS PER PAIR) AUX.	NEUTRAL CONTACTS	POLAR CONTACTS	* WORKING ENERGIZATION	DRAWING
D	UN228410	150	270	4F-4B	4N-4R	2.50 Volts	C9407-7
Da	UN194313	250	270	4F-4B	4N-4R	3.29 Volts	C9407-7
Db	UN228105	400	270	4F-4B	4N-4R	4.35 Volts	C9407-7
Dc	UN213977	670	270	4F-4B	4N-4R	5.40 Volts	C9407-7
Dd	UN329938	1000	270	4F-4B	4N-4R	6.90 Volts	C9407-7

Six Point Style DP-21 Retained Neutral Polarized Relay With Four Normal And Four Reverse Polar Contacts							
REF.	PIECE	COIL RESISTANCE (OHMS PER PAIR) MAIN	COIL RESISTANCE (OHMS PER PAIR) AUX.	NEUTRAL CONTACTS	POLAR CONTACTS	* WORKING ENERGIZATION	DRAWING
E	UN190149	250	270	6F-6B	4N-4R	4.10 Volts	C9407-9
Ea	UN188759	400	270	6F-6B	4N-4R	5.44 Volts	C9407-9
Eb	UN223875	670	270	6F-6B	4N-4R	6.77 Volts	C9407-9

STYLE FN-27 FLASHER RELAY

The Union Style FN-27 relay is a small-size flasher relay developed especially for use in providing wayside flashing signal aspects. Such aspects are now coming into extensive use on many railroads as a means for obtaining additional signal indications. Two dependent normal and reverse contacts, conservatively rated at 2.5 amperes per contact, are provided for controlling signal lamp circuits or other external circuits. In addition, two control contacts for alternately shunting the relay coils are also provided.

For highway crossing signal applications, use the Style FN-16A Flasher Relay which meets the contact rating (A. A. R. Signal Section Manual Part 143) for this service.

OUTSTANDING FEATURES OF THE STYLE FN-27 FLASHER RELAY

The relay is exceptionally compact. The actual shelf length required for the Style FN-27 relay is only 54% of that required for existing relays of comparable nature.

All parts of the relay are designed and built to give long service life and dependable performance with a minimum amount of attention.

The armature is biased to cause half of the lamp contacts to be normally closed when the relay is de-energized. Both of the control contacts, however, are normally open when the relay is de-energized.

The relay operates with equal "on" and "off" periods, thus assuring that a very uniform flashing light aspect is obtained.

Temperature compensation is provided which makes the flashing rate independent of variations in ambient temperature from -40°F. to +180°F.

Design of the magnetic circuit is such that the rate of flashing is also independent of fluctuations in operating voltage.

The flashing rate can be quickly and accurately adjusted over a wide range, approximately 40 to 60 flashes per minute, to meet individual requirements.

Adjustment of the flashing rate is made without opening the relay or disturbing the contact adjustments. Removing a screw cap on the relay top plate exposes the head of a self-locking adjusting screw which can be turned with a small screwdriver to set the flashing rate at the desired value. The screw cap is sealed to prevent the entrance of dirt and moisture into the relay. Provision is made for applying a wire-type seal to the screw cap to prevent unauthorized changes of adjustment.

Shelf-type shock absorbers are furnished with each relay. Wall type shock absorbers can be furnished on request.

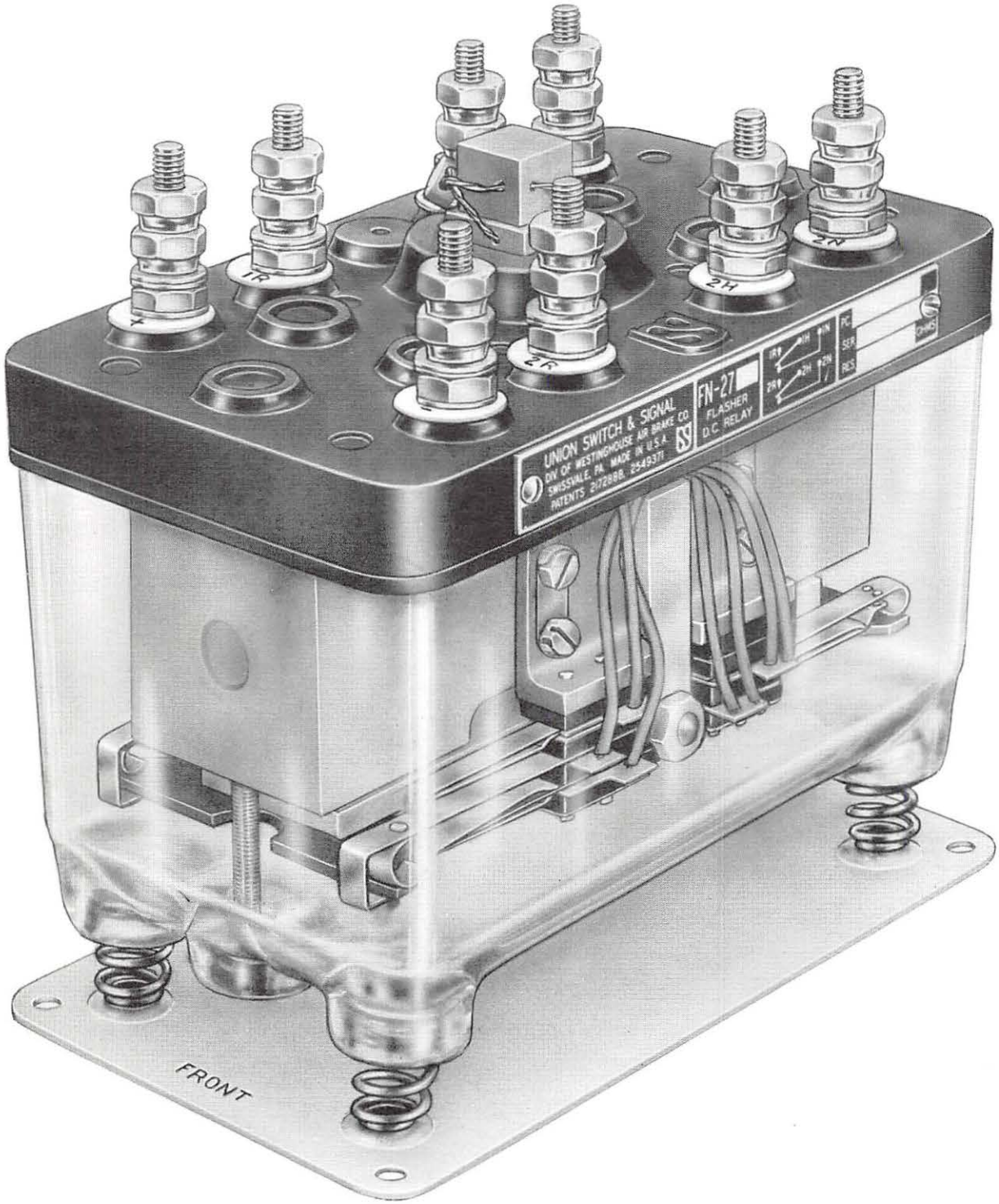

Height 6", Width 4-1/8", Depth 7-1/4"

STYLE FN-27 FLASHER RELAY

STYLE FN-27 FLASHER RELAY

Refer to Plate E1-2005.1 for relay details.

Order by Plate, Reference, Piece and Abbreviated Description

FLASHER RELAY, Complete, adjustable 40 to 60 flashes per minute					
REF	PIECE	CONTACT	COIL RESISTANCE	NOMINAL BATTERY VOLTAGE	DRAWING
A	UN280688	2N-2R	85-85	10-20 D.C.	C16941-2

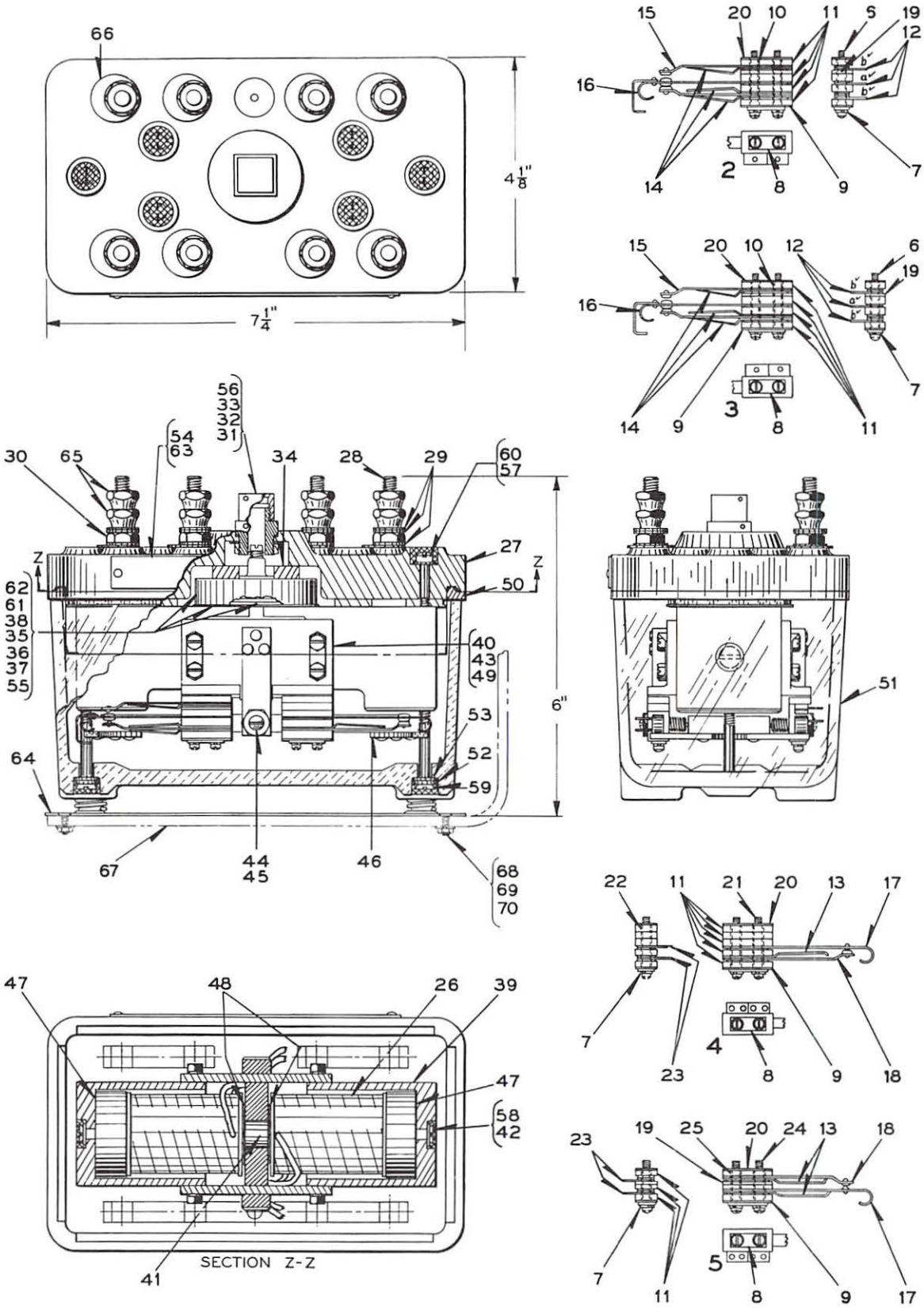

STYLE FN-27 FLASHER RELAY

STYLE FN-27 FLASHER RELAY

Detail Parts

Indented item descriptions indicate that the references in the "Used On" column refer to this Plate, E1-2005.1. All other references refer to the General Plate E1-2005.

Order by Plate, Reference, Piece and Abbreviated Description

REF.	PIECE	DESCRIPTION	DRAWING	USED ON
2	UN280143	Contact Section, Complete (stack section HB)	B12660-50	All
3	UN280142	Contact Section, Complete (stack section HA)	B12660-50	All
4	UN280144	Contact Section, Complete (stack section HC)	B12660-50	All
5	UN280145	Contact Section, Complete (stack section HD)	B12660-50	All
6	UJ52446	. Screw, Mach 3-56 x 1-1/16		2, 3
7	UJ47801	. Washer, Lock No. 3		All
8	UM152720	. Plate	7828-275	All
9	UJ78298	. Insulation	8750-1460	All
10	UM160279	. Insulation Bushings	B10266-1	2, 3
11	UJ78167	. Insulation	8750-2503	All
12	UM215372	. Terminal Connectors	8244-142	2, 3
13	UM152726	. Contact Spring Stops	8385-2166	4, 5
14	UM246798	. Contact Spring Stops	8385-2345	2, 3
15	UN280157	. Contact Spring, Complete	8385-2802	2, 3
16	UN280156	. Contact Spring, Complete	8385-2883	2, 3
17	UN221763	. Contact Spring, Complete	8385-2703	4, 5
18	UN221765	. Contact Spring, Complete	8385-2704	4, 5
19	UJ78121	. Insulation	8750-3044	2, 3, 5
20	UJ78353	. Insulation	8750-1460	All
21	UJ52298	. Screw, Mach Fil. hd. 3-56 x 1		4
22	UM239758	. Insulation Bushing	B10266-1	4
23	UM280153	. Terminal Connector	8244-142	4, 5
24	UJ52403	. Screw, Mach, Fil. hd. 3-56 x 7/8		5
25	UM239759	. Insulation Bushing	B10266-1	5
26	UN280159	Coil, 85 ohms Complete	8133-657	All
27	UM280132	Plate, Top	C16942-1	All
28	UM115706	Post, Binding	8094-1192	All
29	UJ47818	Washer	7828-139	All
30	UM127260	Nut	8109-194	All
31	UM159677	Nut, Seal	8109-453	All

REF.	PIECE	DESCRIPTION	DRAWING	USED ON
32	UM280135	Bushing	8350-1089	All
33	UM252217	Nut	8265-395	All
34	UJ47429	Gasket	8078-1512	All
35	UN280138	Support, Shunt Complete	8350-1090	All
36	UM280137	. Support	8350-1090	35
37	UM288972	. Nut	8109-311	35
38	UM280133	Shunt	8250-141	All
39	UM280683	Pole Piece	8250-145	All
40	UN280682	Bracket, Armature	8303-144	All
41	UN280147	Core	8101-424	All
42	UM18757	Washer	7828-104	All
43	UM162010	Screw	8098-1300	All
44	UM280152	Screw, Pivot	8378-375	All
45	UM535	Nut	8109-1	All
46	UN280151	Armature, Complete	8157-521	All
47	UM283491	Ferrule	8350-752	All
48	UM175630	Washer	7828-374	All
49	UM283450	Washer	8486-432	All
50	UJ47427	Gasket	8078-1818	All
51	UJ53011	Case	C16942-2	All
52	UM258824	Washer	7826-329	All
53	UJ47248	Washer	80780-1407	All
54	UJ630219	Nameplate	8225-1018	All
55	UJ790234	Shim	12775-29	All
56	UM117993	Washer	7828-218	All
57	UJ52353	Screw, Fil. hd. 10-32 x 1 steel		All
58	UJ52130	Screw, Flat hd. 10-32 x 3/4 steel		All
59	UJ52089	Screw, Flat hd. 10-32 x 1-5/8 steel		All
60	UJ47715	Washer, Lock No. 10 steel		All
61	UJ52538	Screw, Rd. hd. 8-36 x 3/4 steel		All
62	UJ47714	Washer, Lock No. 8 steel		All
63	UJ52620	Screw, Rd. hd. 4-40 x 1/2 steel		All
34	UN280687	Shock Absorber	12404-27	All
65	UM29101	Nut, Binding	8109-193	All
66	UM142777	Tag (Order should specify marking desired)	8988-75	All
67	UM280684	Bracket (For Wall Mounting)	10914-342	All
68	UJ52092	Screw, Mach Flat hd. steel 10-32 x 5/8 (Tin Pl.)		All
69	UJ47733	Washer, Lock No. 10 (Tin Pl.)		All
70	UJ48172	Nut, Hex. steel 10-32 (Tin Pl.)		All

GENERAL DESCRIPTION FOR PLUG-IN RELAYS

UNION plug-in type relays, developed to suit a multitude of signal circuit applications, combine the advantage of space economy in mounting with ready replacement without disturbing coil or contact circuits.

PLUG-IN OPERATION

Independent mounting bases which contain spring-socket receptacles are permanently fastened to vertical supporting racks. Circuit connections to the receptacle terminals at the rear of each mounting base may be solderless type (standard) which will accept one or two wires independently, or solder type which will accept one or two wires if applied at the same time. The projecting plug connectors are of heavy material and are shielded from mechanical damage during handling by a wall of insulating material.

INDEXING

Relays and mounting bases are indexed to prevent the insertion of an incorrect relay unit.

TESTING

To facilitate testing, test plugs may be inserted from the rear of the mounting base without opening a contact or coil circuit. By using an insulated test plug in the same manner these circuits may be opened.

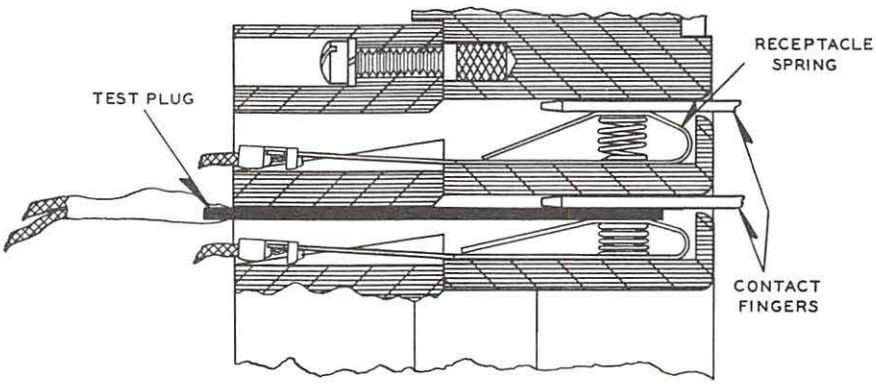

Figure 1 . . . Test plug inserted between spring receptacle and contact finger.

RELAY WINDINGS

The coils used on plug-in relays are adequately covered for protection against mechanical injury and the entrance of moisture.

MAGNETIC CIRCUIT

Magnetic circuits are constructed of non-aging material. The magnetic air gap is not disturbed for relay coil replacement or contact spring replacement or adjustment. Relays containing an adjustable magnetic shunt have the advantage of an adjustment to change the magnetic hold-down force without changing the contact adjustment or the hold-down pole piece position.

CONTACTS

Contact fingers and springs are of simple construction and are heat-treated to remove internal stresses and maintain contact stability. The heavy contact fingers extend through the relay base to serve as

plug connectors. Heel contacts are actuated by operating arms of molded insulation pivoted to the armature. Contact surfaces have sufficient wiping action to be self-cleaning.

Standard low voltage neutral contacts consist of silver to silver-impregnated carbon front and silver to silver back contacts. Standard low voltage polar contacts are silver to silver-impregnated carbon on both normal and reverse contacts. All contacts have standard 0.050" opening and conform to AAR requirements.

COVER

A cover of transparent molded material houses the relay contacts and armature structure. The cover is sealed to its frame by pressure against a gasket, providing a tight, dust-proof, moisture-protected assembly.

INDICATOR

An armature position indicator drops and rises as the relay is operated. A neutral armature in de-energized position displays red, and a polar armature in normal position shows green.

LATCH

A spring-operated latch holds the relay to the mounting base. It is released by pressing a button on the front of the relay.

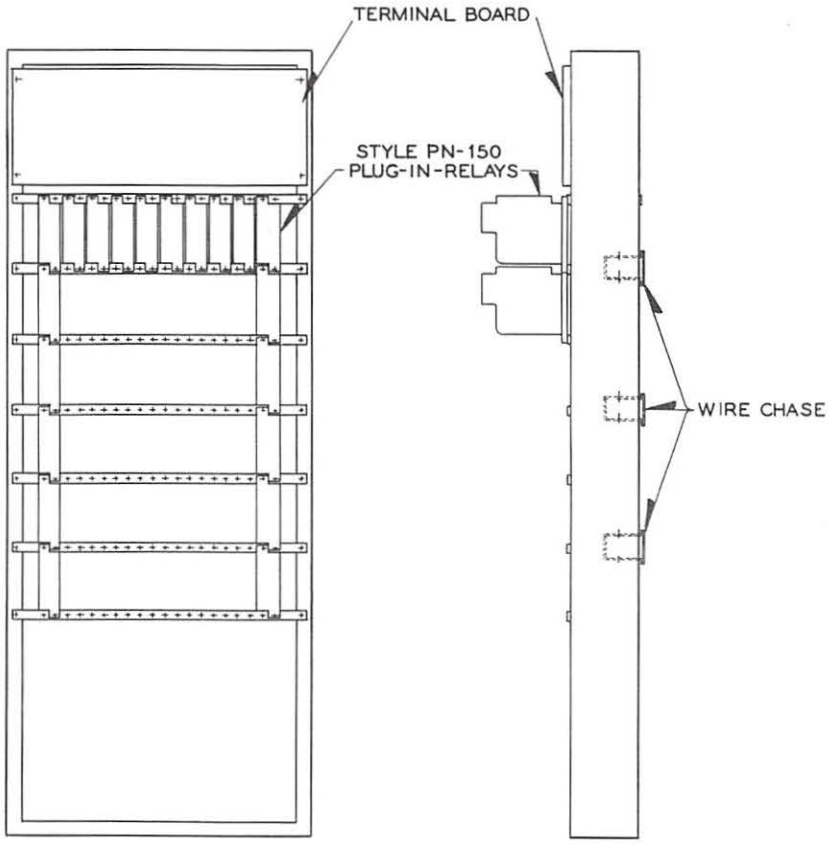

Figure 2 . . . Typical arrangement of PN-150 Relays on Universal Equipment Rack.

OTHER FEATURES

Relay pulls out or plugs in horizontally.

Relay locks securely in plug-in position.

Each contact member and coil lead has an individual plug connector.

All parts are insulated to withstand a 3000-volt ground test.

Plug connections are protected from dust, moisture and mechanical damage.

MOUNTING RACKS AND FRAMES FOR PLUG-IN RELAYS

Racks and Frames for mounting Plug-In Relay Bases, constructed of rolled steel and fabricated as a unit, have been designed to meet various tower and relay case requirements. These are complete with the necessary terminal boards and wire chases for outgoing wires.

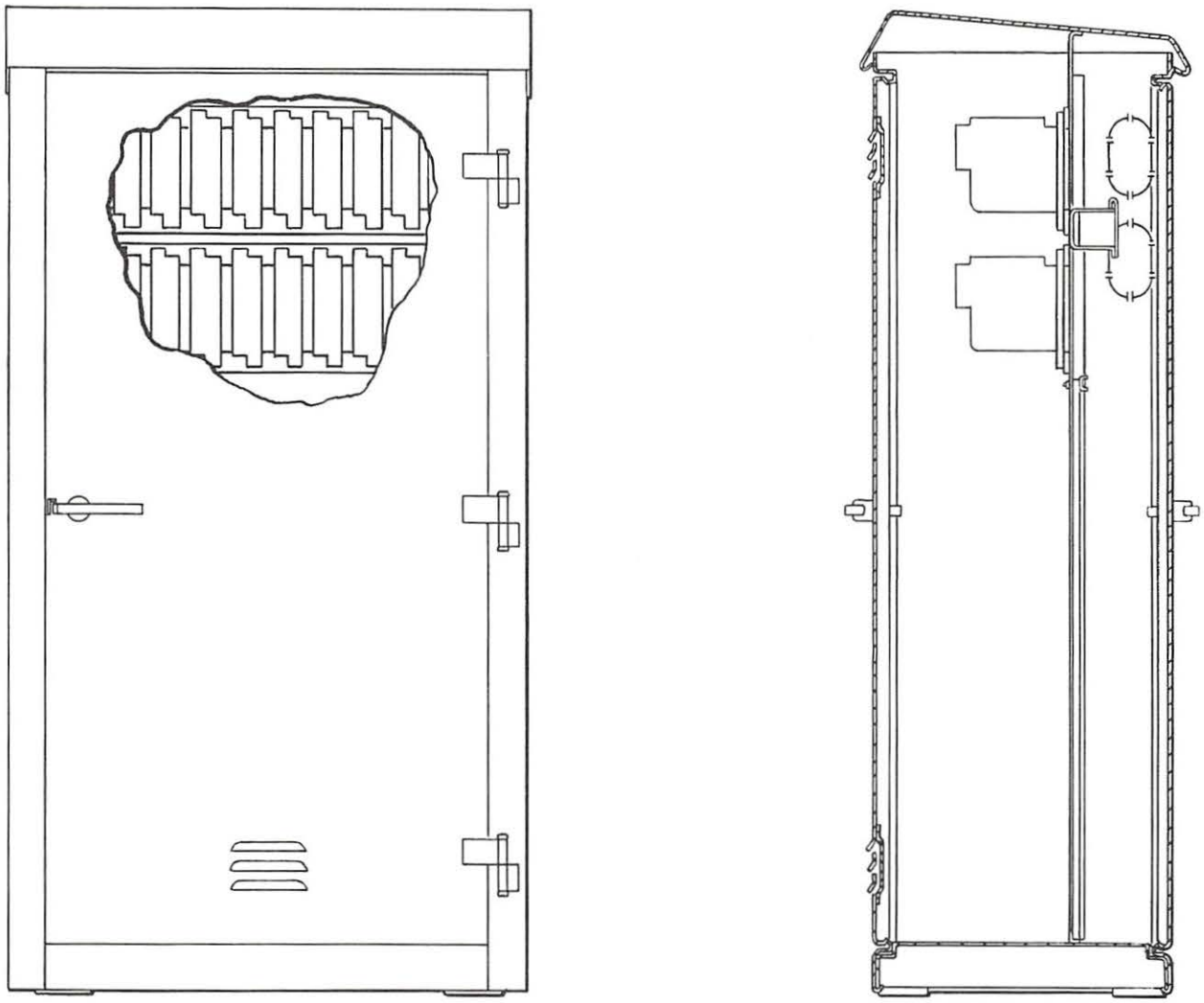

Figure 3 . . . Typical arrangement of PN-150 Relays in Style RS Instrument Case.

STYLE PN-150 PLUG-IN RELAYS

The PN-150 line of UNION plug-in relays is a series of compact relays developed for railway signaling applications. There is a relay in this line for almost any signal circuit requirement.

When it is desired to use these relays in special circuit applications, consult our District Sales Office.

FEATURES

2-7/16" wide x 7-1/16" high.

Permanent magnet bias (except neutral D.C. relays).

When de-energized the permanent magnet holds down the armature.

Adjustable magnetic shunt controls hold-down force (except PN-150BD and PP-151).

Contact Capacity: 4 amperes (except PN-150HD and PN-150P) up to 30 volts D.C. or 175 volts A.C.
15 amperes (PN-150HD and PN-150P only) up to 30 volts A.C. or D.C.

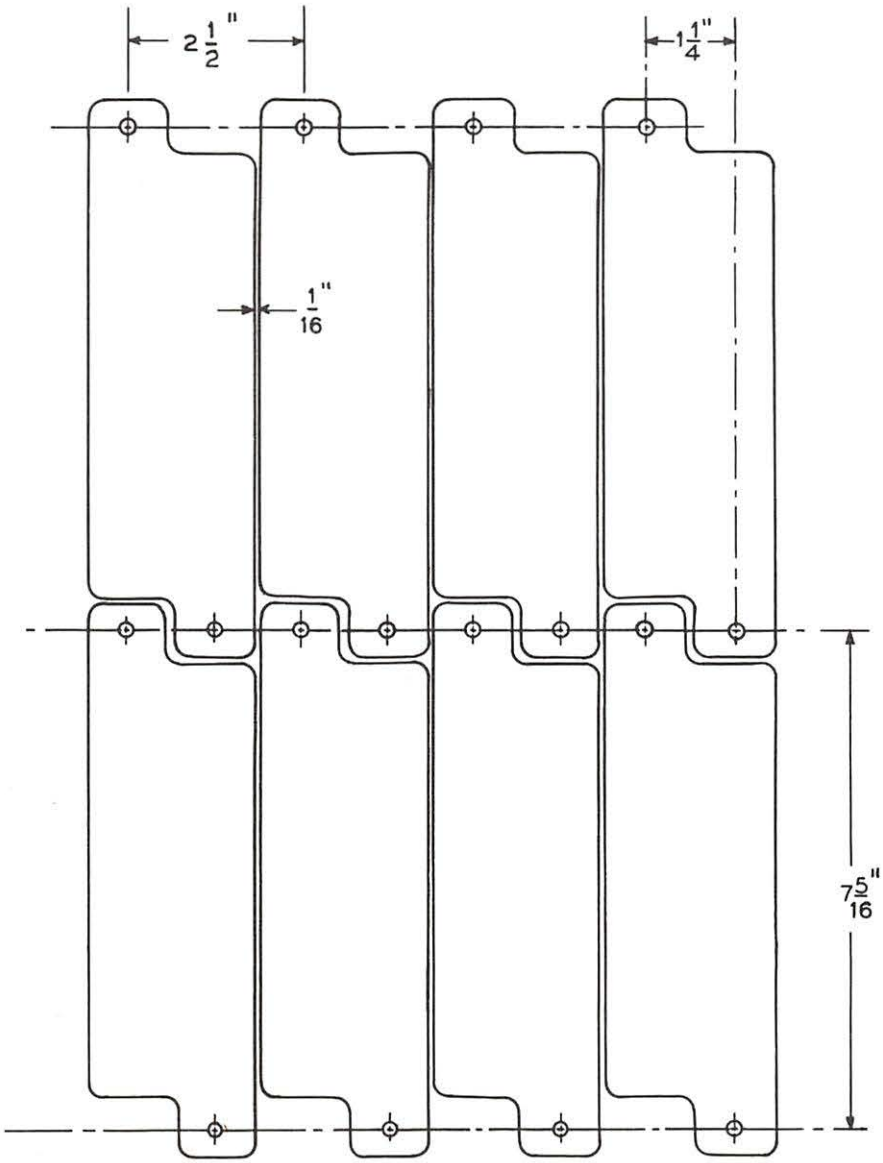

Figure 1 . . . Vertical rack mounting dimensions of PN-150 relays.

NOMINAL LOCAL BATTERY VOLTAGE

This voltage, listed on the individual catalog plates, is prescribed for relays in locally energized circuits. Higher voltages may be used, if desired, up to a maximum of 10 watts power dissipation.

LINE CIRCUIT APPLICATIONS

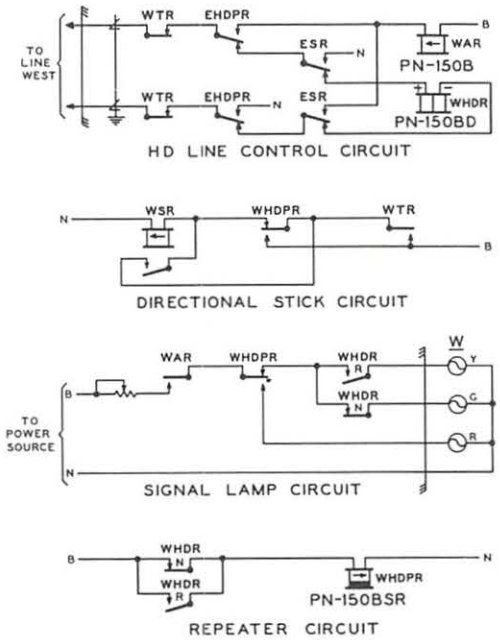

Figure 2 . . . Signal circuit designed to signal a westward bound train on an east-west track.

Figure 2 illustrates a reversible polarized line circuit in which three PN-150 relays are used (PN-150B, PN-150BD, PN-150BSR).

The PN-150B fulfills the requirements for a biased neutral relay needed in this application.

The PN-150BD is a three position D.C. relay which combines the features of two biased neutral relays, oppositely connected, in one structure.

The PN-150BSR is a slow drop-away relay which bridges the reversal of the PN-150BD.

Allowable Line Resistance

Table 1. Allowable Line Resistance.

Nominal Line Battery (Volts)	Allowable Line Resistance (Ohms)	
	100 ohm coil	240 ohms coil
10	150	140
12	180	190
16	280	315

Table 1 applies to single relay operation over a two-wire line circuit without a common return. It should be used to compute the maximum line resistance when relay styles PN-150B, PN-150N, PN-150BD or PN-150HD are in the circuit.

Two of these relays, if used in series, must have the same coil resistance. However, the allowable line resistance would then be reduced by an amount equal to one relay.

There are some applications in which the above limits may be extended and still give reliable operation. Consult our District Sales Office for information on such applications.

If a reversible polarized line circuit similar to that in Figure 2 is used without the series WAR relay, it should be replaced by a resistor to limit current flow when the two line circuit batteries are in series aiding. It is suggested that this resistor be 100 ohms in cases where the sum of this resistor and the line resistor does not exceed the values of Table 1. For higher resistance line circuits, this resistor may be reduced, or removed, if the line resistance is high enough to limit the current to acceptable values.

TRACK CIRCUIT APPLICATIONS

The PN-150B track relay, standardized with a 1-ohm coil, may be used in these track circuits with the approximate maximum lengths shown:

Type Track Circuit	Ballast Resistance (Ohms per 1000')	Approximate Max. Length (Feet)
End fed D.C.	3 5	4000 6000
Center fed D.C.	3 5	8000 12000
AC-DC. A.C. Feed. Full wave rectifier at relay end.	3 5	2000 3000
AC-DC. A.C. Feed. Relay at transformer end. Half wave rectifier at opposite end.	3 5	4000 6000
End fed D.C. with PN-150B multiple approach relay.	3 5	4000 6000

These track lengths are approximate and apply only to circuits energized from the following power sources:

	Max. Lead Resistance (Ohms)
Caustic soda primary battery	0.25
Air cell primary battery	0.8
Nickel storage battery	0.8
Lead storage battery	0.8
Constant potential rectifier	0.8

A PN-150B track relay with a 4-ohm coil is also available for use in short primary battery track circuits.

For applications which require longer track circuits consult our District Sales Office. Local conditions which affect such circuits should be furnished. Track circuit adjustment tables are available at our District Sales Offices upon request. Specify type of circuit and type of battery.

STYLE PN-150B, PN-150BSR AND PN-150HD RELAYS

GENERAL

Permanent magnet bias.

When the relay is de-energized, the permanent magnet holds down the armature.

Adjustable magnetic shunt controls hold-down force.

Contacts: Silver to silver-impregnated carbon front. Silver to silver back.

Contact Capacity: 4 amperes (PN-150B, PN-150BSR) up to 30 volts D.C. or 175 volts A.C.
15 amperes (PN-150HD) up to 30 volts A.C. or D.C.

See Plate E3-2 for a typical application of these three relays.

PN-150B BIASED NEUTRAL RELAY

Ordinary acting.

Meets AAR requirements for use in circuits requiring the biased neutral characteristic.

For track and line circuits.

PN-150HD HEAVY DUTY CONTACT RELAY

Four heavy duty front and back contacts.

Two standard low voltage front and back contacts.

Requires definite polarity for operation.

Not a biased relay in accordance with AAR specifications because of high back contact pressure.

Application: Same as PN-150B except for above biasing restriction.

PN-150BSR SLOW DROP-AWAY RELAY

Core of coil is copper sleeve.

Provides up to 1.0 second drop-away time.

For local battery energization.

Coil	Voltage	Min. Drop-Away Time
100 ohm	4.65	0.8 sec.
	5.56	1.0 sec.
250 ohm	7.51	0.8 sec.
	9.00	1.0 sec.

Plate E3-1 contains general information on all UNION plug-in relays. Greater detail on the PN-150 line may be found on Plate E3-2.

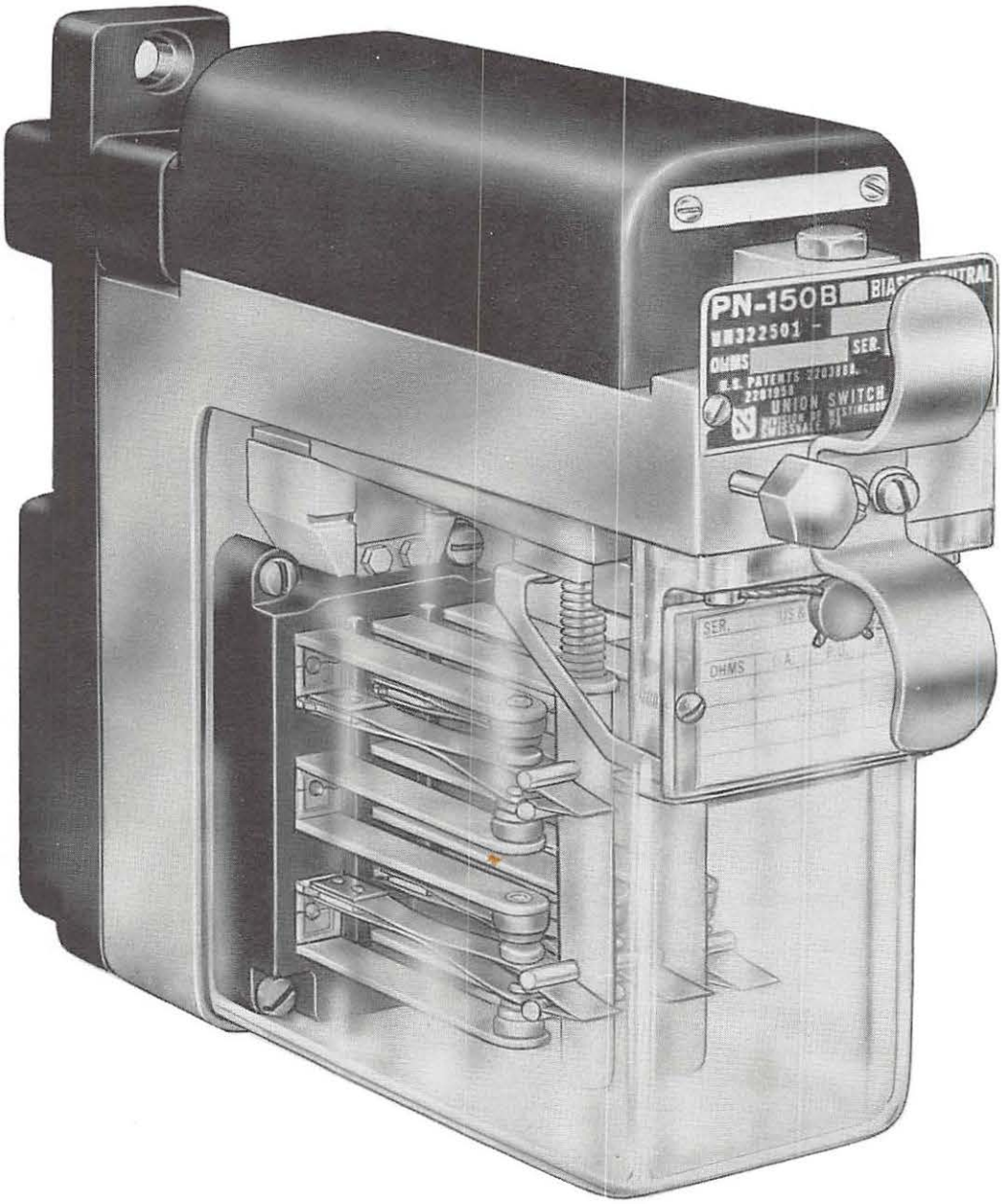

Height 7-1/16", Width 2-7/16", Depth 8-7/32"

STYLE PN-150B BIASED NEUTRAL RELAY

STYLE PN-150B, PN-150BSR AND PN-150HD
6 POINT D.C. NEUTRAL RELAYS

(Biased, Biased Slow Drop-Away and Biased Heavy Duty)
Refer to Plate E3-3.1 for relay details and
Plate E3-3.2 for mounting base details.

Order by Plate, Reference, Piece and Abbreviated Description

Style PN-150-B Biased D.C. Ordinary Acting Neutral Line Relay. Does not include Mounting Base.

Ref.	Piece	Contacts	Res. Ohms	Nominal Local Battery Voltage	Drawing
A	UN322500-004	6F - 6B Low Voltage	100	See Table I, Plate E3-2	D66000-3
Aa	UN322500-005	6F - 6B Low Voltage	240	See Table I, Plate E3-2	D66000-3
Ab	UN322500-001	6F - 6B Low Voltage	400	8 - 10	D66000-3
Ac	UN322500-002	6F - 6B Low Voltage	800	12	D66000-3
Ad	UN322500-003	6F - 6B Low Voltage	1300	14 - 24	D66000-3

Style PN-150B Biased D.C. Ordinary Acting Neutral Track Relay. Does not include Mounting Base

Ref.	Piece	Contacts	Res. Ohms	Minimum Energization (Amps.)	Drawing
B	UN322501-001	6F - 6B Low Voltage	1	0.250	D66000-3
Ba	UN322501-002	6F - 6B Low Voltage	4	0.131	D66000-3

Style PN-150BSR Biased D.C. Slow Drop-Away Neutral Line Relay. Does not include Mounting Base.

Ref.	Piece	Contacts	Res. Ohms	Nominal Local Battery Voltage	Drawing
C	UN322503-001	6F - 6B Low Voltage	100	8 - 10	D66000-3
Ca	UN322503-002	6F - 6B Low Voltage	250	12 - 16	D66000-3

Style PN-150HD Biased D.C. Ordinary Acting Neutral Heavy Duty Line Relay. Does not include Mounting Base

Ref.	Piece	Contacts	Res. Ohms	Nominal Local Battery Voltage	Drawing
D	UN322505-004	4F - 4B Heavy Duty 2F - 2B Standard (low voltage)	100	See Table I, Plate E3-2	D66000-3
Da	UN322505-005	4F - 4B Heavy Duty 2F - 2B Standard (low voltage)	240	See Table I, Plate E3-2	D66000-3
Db	UN322505-001	4F - 4B Heavy Duty 2F - 2B Standard (low voltage)	400	8 - 10	D66000-3
Dc	UN322505-002	4F - 4B Heavy Duty 2F - 2B Standard (low voltage)	800	12 - 14	D66000-3
Dd	UN322505-003	4F - 4B Heavy Duty 2F - 2B Standard (low voltage)	1300	16 - 24	D66000-3

Mounting Base			
Ref	Piece	Description	Drawing
H	UN334266	Mounting Base Complete for PN-150B, PN-150BSR and PN-150HD Relays	D66002-1

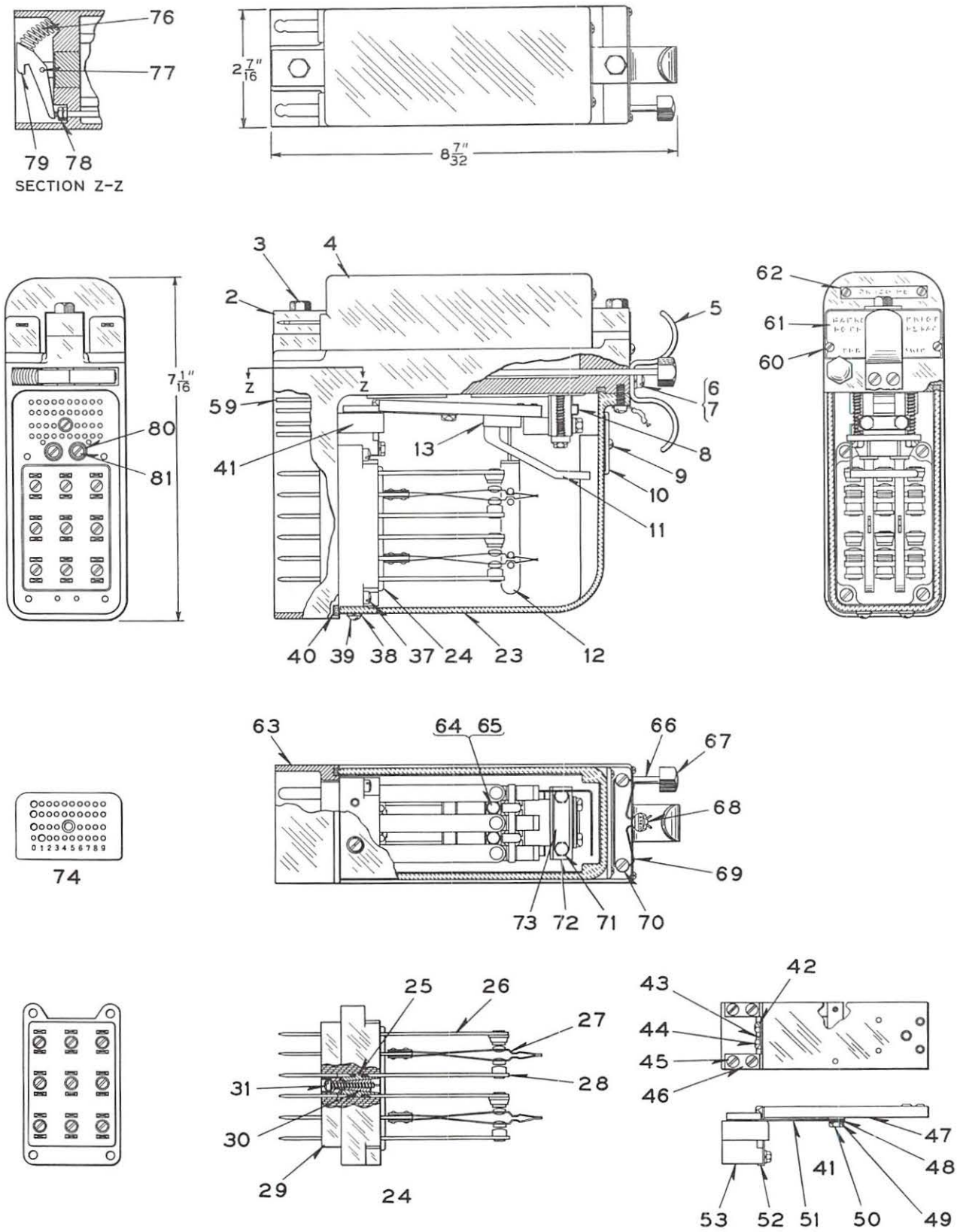

STYLE PN-150B, PN-150BSR AND PN-150HD

6 POINT D.C. BIASED NEUTRAL RELAYS

STYLE PN-150B, PN-150BSR AND PN-150HD
6 POINT D.C. BIASED NEUTRAL RELAYS

Detail Parts

Indented item descriptions indicate that the references in the "Used On" column refer to this Plate, E3-3.1. All other references refer to the General Plate E3-3.

Order by Plate, Reference, Piece and Abbreviated Description

REF.	PIECE	DESCRIPTION	DRAWING	USED ON
2	UM321799	Core	8101-445	All
3	UJ50016	Cap Screw, 1/4" - 20 x 3/4" hex. head (Tin Pl.)		All
4	UM328371	Coil, 1-ohm	D66001-3	B
4a	UM336500	Coil, 100-ohms	D66001-14	C
4b	UM321647-003	Coil, 100-ohms	D66001-3	A, D
4c	UM333975	Coil, 240-ohms	D66001-3	Aa, Da
4d	UM336501	Coil, 250-ohms	D66001-14	Ca
4e	UM321647	Coil, 400-ohms	D66001-3	Ab, Db
4f	UM321647-001	Coil, 800-ohms	D66001-3	Ac, Dc
4g	UM321647-002	Coil, 1300-ohms	D66001-3	Ad, Dd
4h	UM372284	Coil, 4-ohms	D66001-3	Ba
5	UM321821	Handle	8311-181	All
6	UJ52255	Screw, No. 8-32 x 3/8" fil. head steel (Tin Pl.)		All
7	UJ47681	Lock Washer, No. 8 steel (Tin Pl.)		All
8	UM332423	Permanent Magnet Assembly (magnetized)	12748-151	A to Ca inc
8a	UM344418	Permanent Magnet Assembly (magnetized)	12748-151	D to Dd inc
9	UJ52665	Screw, No. 4 x 1/4" round head steel metal (Tin Pl)		All
10	UJ78460	Tag Holder	12770-147	All
11	UM321894	Indicator	12748-147	All
12	UJ78488	Operating Arm	D66001-10	All
13	UJ78467	Support	12770-148	12
23	UM321923	Cover	D66001-2	All
24	UN322066	Contact Block Complete, 6F-6B low voltage contacts	D66001-6	A to Ca inc
24a	UN338221	Contact Block Complete, 6F-6B low voltage contacts (2F-2B standard, 4F-4B heavy duty)	D66001-6	D to Dd inc
25	UJ78470	. Contact Clamp	12770-150	24, 24a
26	UN322222	. Front Contact Spring (Silver Imp. Carbon)	8385-2988	24, 24a
27	UN322232	. Heel Contact Spring (Silver)	8385-2990	24
27a	UN338256	. Heel Contact Spring (Silver)	8385-3016	24a
28	UN322223	. Back Contact Spring (Silver)	8385-2988	24, 24a

REF.	PIECE	DESCRIPTION	DRAWING	USED ON
29	UJ78469	. Contact Block	12770-149	24, 24a
30	UM322455	. Wedge	12770-151	24, 24a
31	UJ522092	. Screw, No. 6-32 x 7/8" fil. head steel		24, 24a
37	UJ522104	Screw, No. 8-32 x 7/8" fil. head steel		All
38	UM347631	Washer	8078-1896	All
39	UJ525030	Screw, No. 6-32 x 5/16" round head steel (Tin Pl.)		All
40	UJ47081	Gasket	8078-1933	All
41	UN321876	Armature Assembly complete for ordinary acting line relays	D66001-5	A to Ad inc. D to Dd inc.
41a	UN328363	Armature Assembly complete for ordinary acting track relays	D66001-5	B, Ba
41b	UN336509	Armature Assembly complete for slow release line relays	D66001-5	C, Ca
42	UM321754	. Bolt Lock	8486-446	41, 41a, 41b
43	UM321850	. Strap Washer	7826-430	41, 41a, 41b
44	UM321787	. Screw	8098-1559	41, 41a, 41b
45	UJ521096	. Screw, No. 6-32 x 3/8" flat head steel (Tin Pl.)		41, 41a, 41b
46	UM321849	. Washer	7828-461	41, 41a, 41b
47	UN321872	. Armature	8157-547	41
47a	UN328362	. Armature	8157-547	41a
47b	UN336508	. Armature	8157-547	41b
48	UM321851	. Strap Washer	7828-430	41, 41a, 41b
49	UM321755	. Bolt Lock	8486-446	41, 41a, 41b
50	UJ463075	. Screw, No. 6-32 x 1/4" hex. head steel (Tin Pl.)		41, 41a, 41b
51	UM321819	. Horizontal Spring	8735-1206	41, 41a, 41b
52	UM321820	. Vertical Spring	8735-1206	41, 41a, 41b
53	UM321744	. Armature Bracket	12770-144	41, 41a, 41b
59	UJ487090	Indexing Pin		All
60	UJ525024	Screw, No. 4-40 x 3/16" round head steel (Tin Pl.)		All
61	UJ630654	Name Plate for ordinary acting line relays. Orders should specify piece number of relay for which Name Plate is desired	8225-1413	A to Ad inc.
61a	UJ630776	Name Plate for ordinary acting track and slow release line relays. Orders should specify piece number of relay for which Name Plate is desired	8225-1501	B, Ba, C, Ca
61b	UJ630871	Name Plate for ordinary acting line relays with heavy duty contacts. Orders should specify piece number of relay for which Name Plate is desired	8225-1573	D to Dd inc.
62	UJ75828	Tag	B35002-14	All
63	UM321761	Frame	D66001-1A	All
64	UM275388	Bolt Lock	8486-432	All
65	UJ463076	Screw, No. 6-32 x 7/16" hex. head steel (Tin Pl.)		All

REF.	PIECE	DESCRIPTION	DRAWING	USED ON
66	UM321855	Latch Rod	8098-1560	All
67	UM321856	Latch Button	8109-533	All
68	UJ79351	Seal	8988-33	All
69	UA43013	Seal Wire (Orders should specify length desired)		All
70	UM321747	Screw	8098-1558	All
71	UM327179	Screw, (Non-magnetic)	8098-1569	All
71a	UJ463078	Screw, No. 8-32 x 1-1/4" hex. head steel (Tin Pl.) To be used when needed in calibration		All
72	UM321853	Strap	7826-363	All
73	UM321756	Bolt Lock	8486-446	All
74	UM322078-0004	Indexing Plate for PN-150B ordinary acting line relay with 100-ohm coil	D66001-8	A
74a	UM322078-0005	Indexing Plate for PN-150B ordinary acting line relay with 240-ohm coil	D66001-8	Aa
74b	UM322078-0001	Indexing Plate for PN-150B ordinary acting line relay with 400-ohm coil	D66001-8	Ab
74c	UM322078-0002	Indexing Plate for PN-150B ordinary acting line relay with 800-ohm coil	D66001-8	Ac
74d	UM322078-0003	Indexing Plate for PN-150B ordinary acting line relay with 1300-ohm coil	D66001-8	Ad
74e	UM322078-0101	Indexing Plate for PN-150B ordinary acting track relay with 1-ohm coil	D66001-8	B
74f	UM322078-0301	Indexing Plate for PN-150BSR slow release line relay with 100-ohm coil	D66001-8	C
74g	UM322078-0302	Indexing Plate for PN-150BSR slow release line relay with 250-ohm coil	D66001-8	Ca
74h	UM322078-0504	Indexing Plate for PN-150HD ordinary acting line relay with 100-ohm coil	D66001-8	D
74j	UM322078-0505	Indexing Plate for PN-150HD ordinary acting line relay with 240-ohm coil	D66001-8	Da
74k	UM322078-0501	Indexing Plate for PN-150HD ordinary acting line relay with 400-ohm coil	D66001-8	Db
74m	UM322078-0502	Indexing Plate for PN-150HD ordinary acting line relay with 800-ohm coil	D66001-8	Dc
74n	UM322078-0503	Indexing Plate for PN-150HD ordinary acting line relay with 1300-ohm coil	D66001-8	Dd
74p	UN322078-0102	Indexing Plate for PN-150B ordinary acting track relay with 4-ohm coil	D66001-8	Ba
75	UJ52246	Screw, No. 6-32 x 1-1/4" fil. head steel (Tin Pl.) for attaching Indexing Plate to Mounting Base (Not shown)		All
76	UM321861	Spring	7770-716	All
77	UM301356	Dowel	8097-1049	All
78	UJ480006	Hex. Nut, No. 4-40 steel (Tin Pl.)		All
79	UM321728	Latch	8236-72	All
80	UM291657	Washer	7826-336	All

REF.	PIECE	DESCRIPTION	DRAWING	USED ON
81	UJ52243	Screw, No. 6-32 x 7/16" fil. head steel (Tin Pl.) . .		All
82	UM321746	Coil Lock (Not Shown)	8735-1205	All

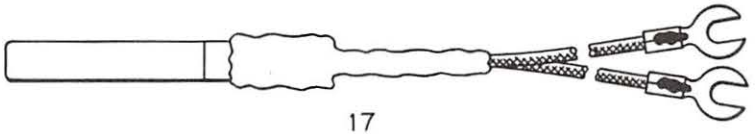

17

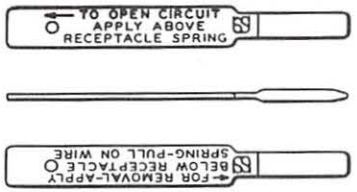

18

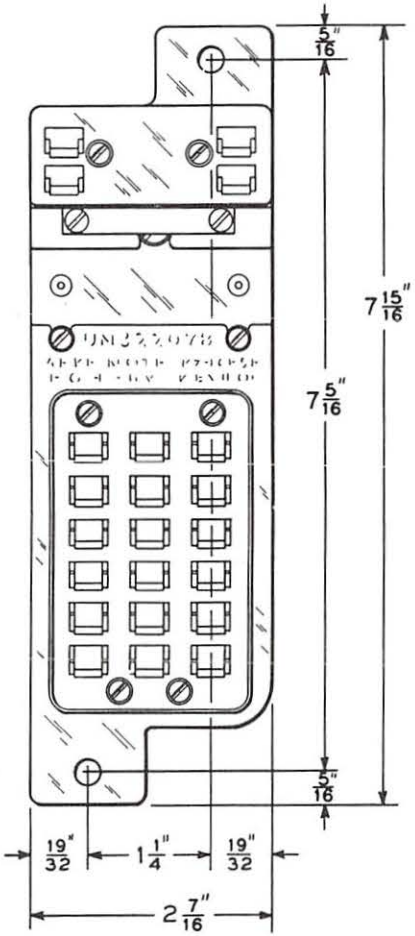

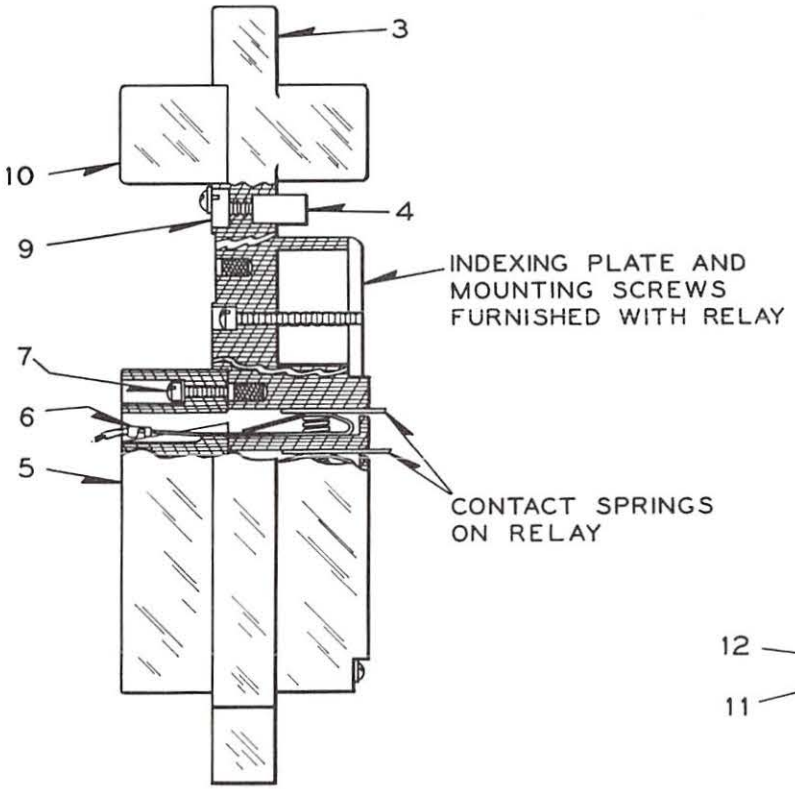

2

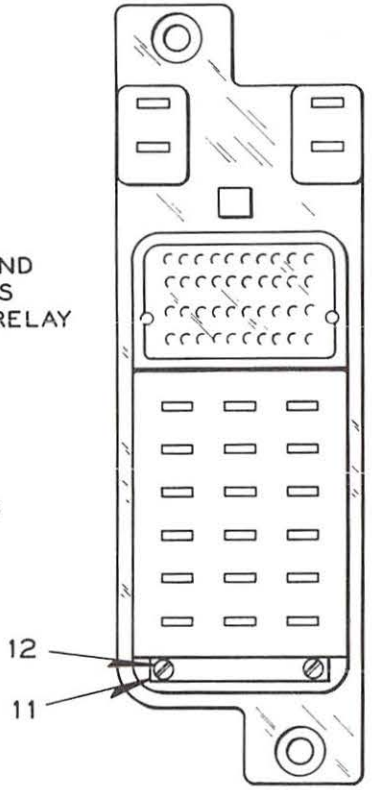

MOUNTING BASE for Style PN-150B, PN-150BSR
AND PN-150HD RELAYS

STYLE PN-150B, PN-150BSR AND PN-150HD
6 POINT D.C. BIASED NEUTRAL RELAYS

Detail Parts

MOUNTING BASE

Indented item descriptions indicate that the references in the "Used On" column refer to this Plate, E3-3.2. All other references refer to the General Plate E3-3.

Order by Plate, Reference, Piece and Abbreviated Description

REF.	PIECE	DESCRIPTION	DRAWING	USED ON
2	UN334266	Mounting Base Complete	D66002-1	All
3	UJ78455	. Mounting Base Only	D66003-1	2
4	UM321745	. Strike	8236-71	2
5	UJ78462	. Clamping Plate	B35004-1	2
6	UN333845	. Contact Receptacle Complete (solderless type)	8385-3012	2
7	UJ522090	. Screw, No. 6-32 x 5/8" fil. head steel (Tin Pl.)		2
9	UM267499	. Nut	8109-383	2
10	UJ78463	. Clamping Block	B35004-2	2
11	UJ75828	. Tag	B35002-14	2
12	UJ525024	. Screw, No. 4-40 x 3/16" round head (Tin Pl.)		2
13	UJ525033	. Screw, 1/4" - 20 x 1-1/4" round head steel (Tin Pl) (Not Shown)		2
14	UJ47711	. Washer (Not Shown)	8078-121	2
15	UJ47775	. Lock Washer, 1/4" steel (Tin Pl.) (Not Shown)		2
16	UJ48002	. Hex. Nut, 1/4" - 20 steel (Tin Pl.) (Not Shown) Note: Refs. 13 to 16 inclusive are for attaching mounting base to rack.		2
17	UM322965	Meter Test Plug	A2586-147	
18	UJ77931	Insulated Test Plug. Used for opening any coil or contact circuit and for removing receptacle springs.	A2586-177	

STYLE PN-150N 6 POINT D.C. NEUTRAL RELAY

RELAY FEATURES

Responds to current of either polarity.

Mechanical lock holds armature down when relay is de-energized.

Lock is released upon energization.

Recommended for use only where a relay is required to respond to either polarity.

For line circuits.

Contacts: Silver to silver-impregnated carbon front. Silver to silver back.

Contact Capacity: 4 amperes up to 30 volts D.C. or 175 volts A.C.

Plate E3-1 contains general information on all UNION plug-in relays. Greater detail on the PN-150 line may be found on Plate E3-2.

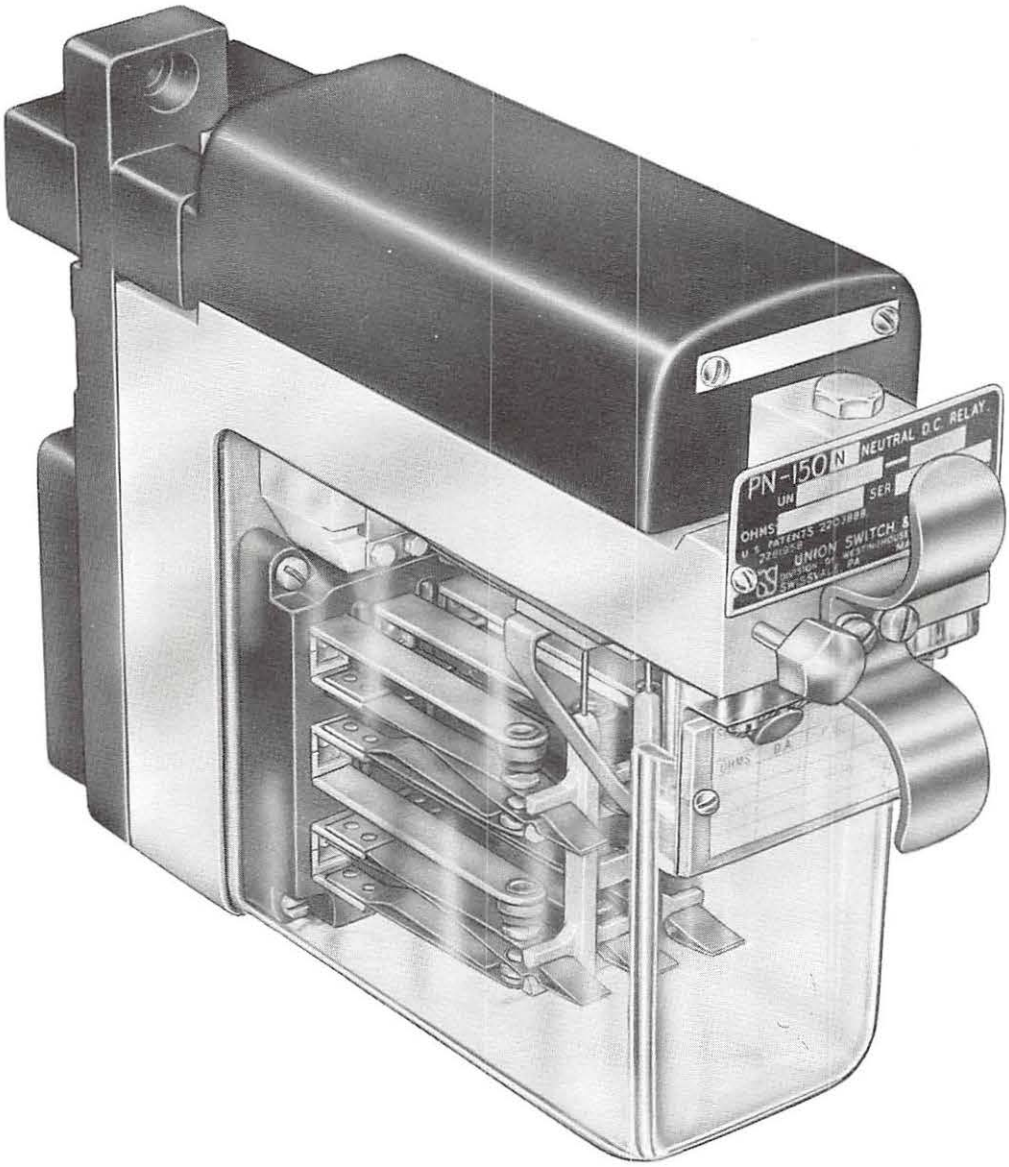

Height 7-1/16", Width 2-7/16", Depth 8-7/32"

STYLE PN-150N 6 POINT D.C. NEUTRAL RELAY

STYLE PN-150N 6 POINT D.C. NEUTRAL RELAY

Refer to Plate E3-4.1 for relay details and
Plate E3-4.2 for mounting base details.

Order by Plate, Reference, Piece and Abbreviated Description

Style PN-150N D.C. Ordinary Acting Neutral Line Relay. Does not include Mounting Base.					
Ref.	Piece	Contacts	Res. Ohms	Nominal Local Battery Voltage	Drawing
A	UN322502-002	6F-6B Low Voltage	100	See Table I, Plate E3-2	D66000-6
Aa	UN322502-001	6F-6B Low Voltage	240	See Table I, Plate E3-2	D66000-6

Mounting Base			
Ref.	Piece	Description	Drawing
E	UN334266	Mounting Base Complete for PN-150N Relays	D66002-1

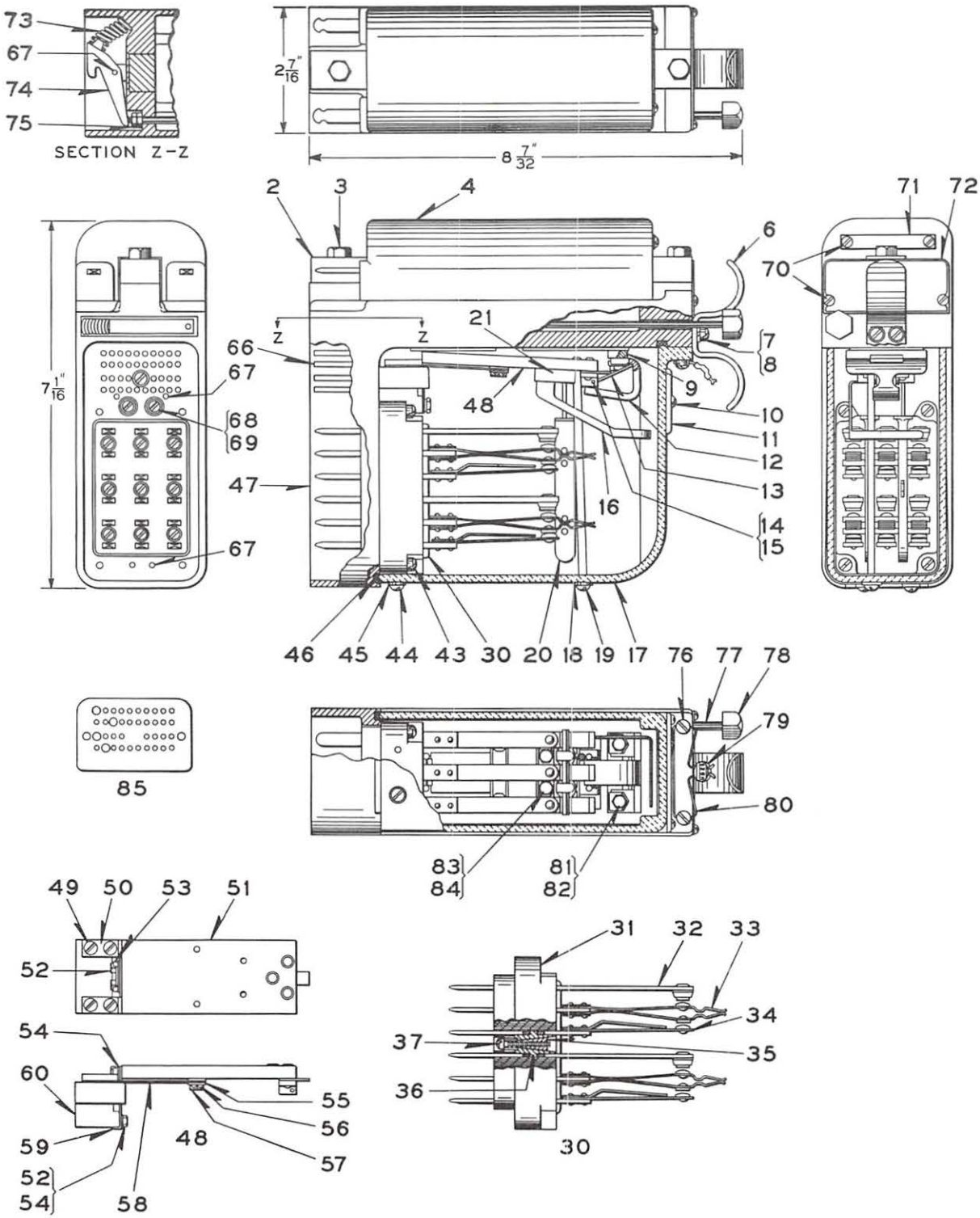

STYLE PN-150N 6 POINT D.C. NEUTRAL RELAY

STYLE PN-150N 6 POINT D.C. NEUTRAL RELAY

Detail Parts

Indented item descriptions indicate that the references in the "Used On" column refer to this Plate, E3-4.1. All other references refer to the General Plate E3-4.

Order by Plate, Reference, Piece and Abbreviated Description

REF.	PIECE	DESCRIPTION	DRAWING	USED ON
2	UM321799	Core	8101-445	All
3	UJ50016	Cap Screw, 1/4" - 20 x 3/4" hex. head (Tin Pl.)		All
4	UM321647-003	Coil, 100-ohms	D66001-3	A
4a	UM333975	Coil, 240-ohms	D66001-3	Aa
5	UM321746	Coil Lock (Not Shown)	8735-1205	All
6	UM321821	Handle	8311-181	All
7	UM52255	Screw, No. 8-32 x 3/8" fil. head steel (Tin Pl.)		All
8	UJ47681	Lock Washer, No. 8 steel (Tin Pl.)		All
9	UM333711	Strap	9999-3512	All
10	UJ52665	Screw, No. 4 x 1/4" round head sheet metal (Tin Pl.)		All
11	UJ78460	Tag Holder	12770-147	All
12	UM333712	Armature Stop	12748-167	All
13	UN333718	Armature Latch	12748-170	All
14	UM333713	Washer	7828-465	All
15	UM333708	Pin	8097-852	All
16	UM321894	Indicator	12748-147	All
17	UM335067	Cover	D66001-2	All
18	UM5511	Washer	7828-2	All
19	UM335156	Screw Items 18 and 19 are for shipping purposes only; replace with Refs. 45 and 87 when relay is placed in service.	8098-424	All
20	UJ78488	Operating Arm	D66001-10	All
21	UM335116	Support	12770-148A	20
30	UN333720	Contact Block Complete, 6F-6B low voltage contacts	D66001-6	All
31	UJ78469	. Contact Block	12770-149	30
32	UN322222	. Front Contact Spring (Silver Imp. Carbon)	8385-2988	30
33	UN322232	. Heel Contact Spring (Silver)	8385-2990	30
34	UN333719	. Back Contact Spring (Silver)	8385-3011	30
35	UM322455	. Wedge	12770-151	30
36	UJ78470	. Contact Clamp	12770-150	30
37	UJ522090	. Screw, No. 6-32 x 7/8" fil. head steel		30

REF.	PIECE	DESCRIPTION	DRAWING	USED ON
43	UJ522104	Screw, No. 8-32 x 7/8" fil. head steel		All
44	UJ525030	Screw, No. 6-32 x 5/16" round head steel (Tin Pl.)		All
45	UM347631	Washer	8078-1896	All
46	UJ47081	Gasket	8078-1933	All
47	UM321761	Frame	D66001-1A	All
48	UN331845	Armature Complete	D66001-5	All
49	UJ521096	. Screw, No. 6-32 x 3/8" flat head steel (Tin Pl.)		48
50	UM321849	. Washer	7828-461	48
51	UN331844	. Armature	8157-549	48
52	UM321787	. Screw	9098-1559	48
53	UM321754	. Bolt Lock	8486-446	48
54	UM321850	. Strap Washer	7826-430	48
55	UM321851	. Strap Washer	7828-430	48
56	UM321755	. Bolt Lock	8486-446	48
57	UJ463075	. Screw, No. 6-32 x 1/4" hex. head steel (Tin Pl.)		48
58	UM321819	. Horizontal Spring	8735-1206	48
59	UM321820	. Vertical Spring	8735-1206	48
60	UM321744	. Armature Bracket	12770-144	48
66	UJ487090	Indexing Pin		All
67	UM301356	Dowel Pin	8097-1049	All
68	UJ52243	Screw, No. 6-32 x 7/16" fil. head steel (Tin Pl.)		All
69	UM291657	Washer	7826-336	All
70	UJ525024	Screw, No. 4-40 x 3/16" round head steel (Tin Pl.)		All
71	UJ75828	Tag	B35002-14	All
72	UJ630777	Name Plate. Orders should specify piece number of relay for which Name Plate is desired	8225-1502	All
73	UM321861	Spring	770-716	All
74	UM321728	Latch	8236-72	All
75	UJ480006	Hex. Nut, No. 4-40 steel (Tin Pl.)		All
76	UM321747	Screw	8098-1558	All
77	UM321855	Latch Rod	8098-1560	All
78	UM321856	Latch Button	8109-533	All
79	UJ79351	Seal	8988-33	All
80	UA43013	Seal Wire (Orders should specify length desired)		All
81	UJ46369	Screw, No. 8-32 x 1/2" hex. head steel (Tin Pl.)		All
82	UM185878	Bolt Lock	8486-405	All
83	UM275388	Bolt Lock	8486-432	All
84	UJ463076	Screw, No. 6-32 x 7/16" hex. head steel (Tin Pl.)		All
85	UM322078-0202	Indexing Plate	D66001-8	A

REF.	PIECE	DESCRIPTION	DRAWING	USED ON
85a	UM322078-0201	Indexing Plate	D66001-8	Aa
86	UJ52246	Screw, No. 6-32 x 1-1/4" fil. head steel (Tin Pl.) for attaching Indexing Plate to Mounting Base (Not Shown)		All
87	UJ51631	Screw, No. 8-32 x 1/4" round head brass (N. Pl.) (Not Shown)		All

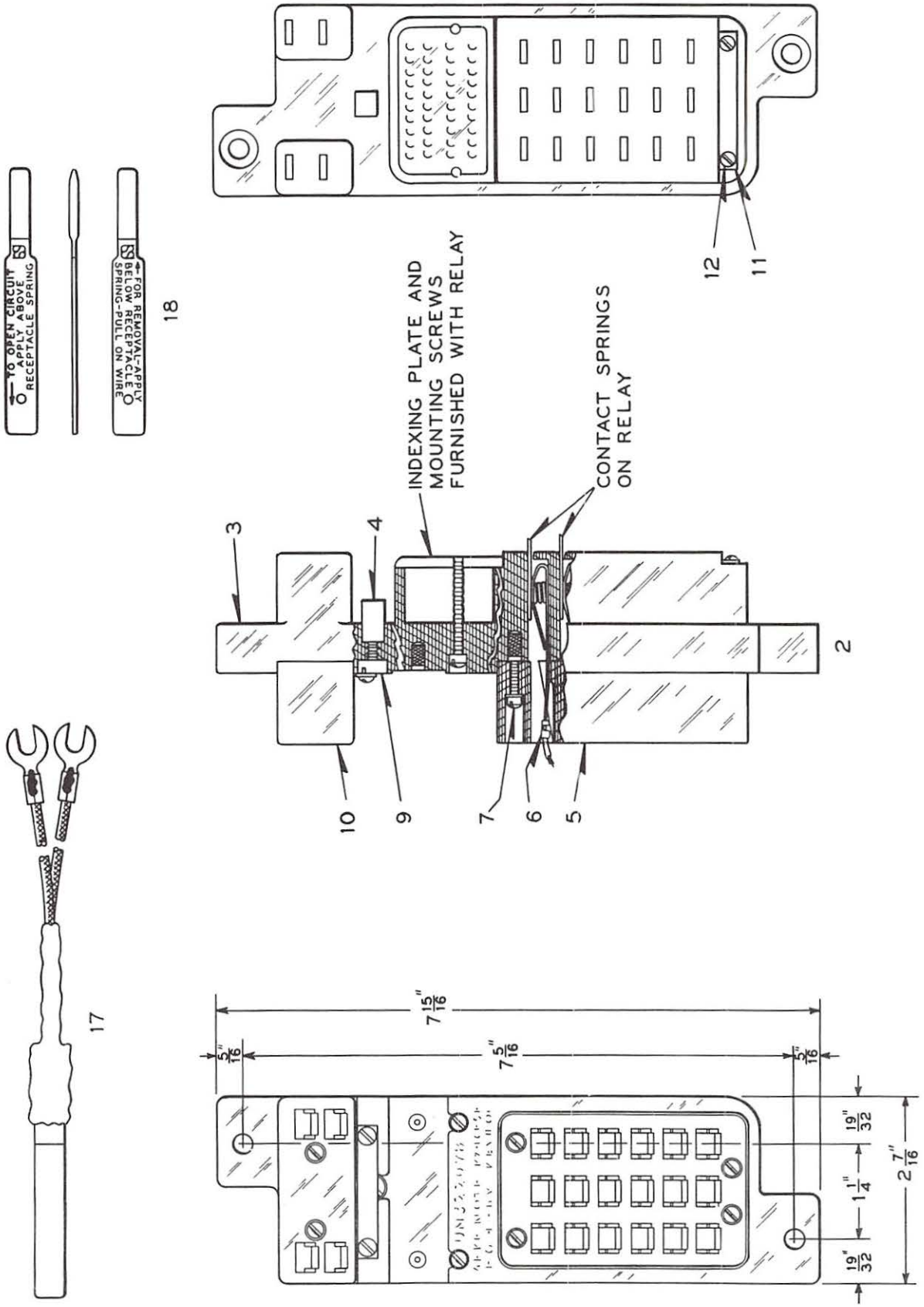

MOUNTING BASE for Style PN-150N Relay

STYLE PN-150N 6 POINT D.C. NEUTRAL RELAY

Detail Parts

MOUNTING BASE

Indented item descriptions indicate that the references in the "Used On" column refer to this Plate, E3-4.2. All other references refer to the General Plate E3-4.

Order by Plate, Reference, Piece and Abbreviated Description

REF.	PIECE	DESCRIPTION	DRAWING	USED ON
2	UN334266	Mounting Base Complete	D66002-1	All
3	UJ78455	. Mounting Base Only	D66003-1	2
4	UM321745	. Strike	8236-71	2
5	UJ78462	. Clamping Plate	B35004-1	2
6	UN333845	. Contact Receptacle Complete (solderless type)	8385-3012	2
7	UJ522090	. Screw, No. 6-32 x 5/8" fil. head steel (Tin Pl.)		2
9	UM267499	. Nut	8109-383	2
10	UJ78463	. Clamping Block	B35004-2	2
11	UJ75828	. Tag	B35002-14	2
12	UJ525024	. Screw, No. 4-40 x 3/16" round head (Tin Pl.)		2
13	UJ525033	. Screw, 1/4" - 20 x 1-1/4" round head steel (Tin Pl.) (Not Shown)		2
14	UJ47711	. Washer (Not Shown)	8078-121	2
15	UJ47775	. Lock Washer, 1/4" steel (Tin Pl.) (Not Shown)		2
16	UJ48002	. Hex. Nut, 1/4" - 20 steel (Tin Pl.) (Not Shown)		2
		Note: Refs. 13 to 16 inclusive are for attaching mounting base to rack.		
17	UN322965	Meter Test Plug	A2586-147	
18	UJ77931	Insulated Test Plug. Used for opening any coil or contact circuit and for removing receptacle springs.	A2586-177	

STYLE PN-150BD 6 POINT BIASED THREE POSITION D.C. RELAY

RELAY FEATURES

Equivalent of two oppositely biased plug-in relays.

Contains two contact drivers, two armatures (normal and reverse).

Normal and reverse armatures respond to opposite polarities.

Both armatures never pick up at same time.

Permits use of longer line circuits with given battery (consumes less power than its equivalent of two oppositely biased relays).

Contacts: Silver to silver-impregnated carbon front. Silver to silver back.

Contact Capacity: 4 amperes up to 30 volts D.C. or 175 volts A.C.

Application: Designed for use in polarized signal control circuits similar to figure 2, catalog plate E3-2.

Plate E3-1 contains general information on all UNION plug-in relays. Greater detail on the PN-150 line may be found on Plate E3-2.

Pick up .3 nominal
.4 sec.
drop out .04 sec.

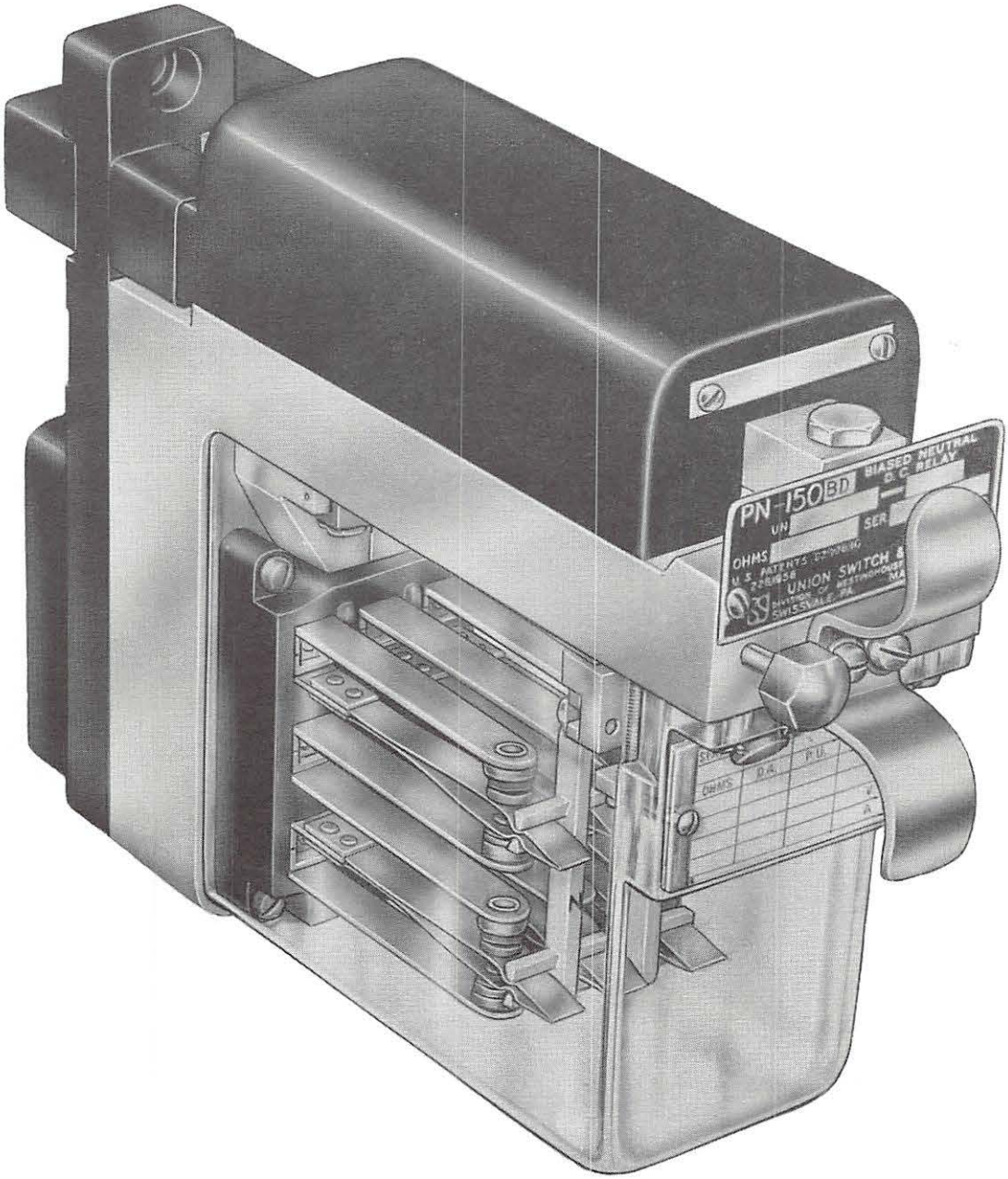

Height 7-1/16", Width 2-7/16", Depth 8-7/32"

STYLE PN-150BD 6 POINT BIASED

THREE POSITION D.C. RELAY

STYLE PN-150BD 6 POINT BIASED THREE POSITION D.C. RELAY

Refer to Plate E3-5.1 for relay details and
Plate E3-5.2 for mounting base details.

Order by Plate, Reference, Piece and Abbreviated Description

Style PN-150BD 6 Point Ordinary Acting Biased Three Position D.C. Relay. Does not include Mounting Base.					
Ref.	Piece	Contacts	Res. Ohms	Nominal Local Battery Voltage	Drawing
A	UN322504-002	3F-3B Normal 3F-3B Reverse Low Voltage	100	See Table I, Plate E3-2	D66000-9
Aa	UN322504-001	3F-3B Normal 3F-3B Reverse Low Voltage	400	8-10	D66000-9
Ab	UN322504-003	3F-3B Normal 3F-3B Reverse Low Voltage	800	12-14	D66000-9

Mounting Base			
Ref.	Piece	Description	Drawing
E	UN335727	Mounting Base Complete for PN-150BD Relay	D66002-1

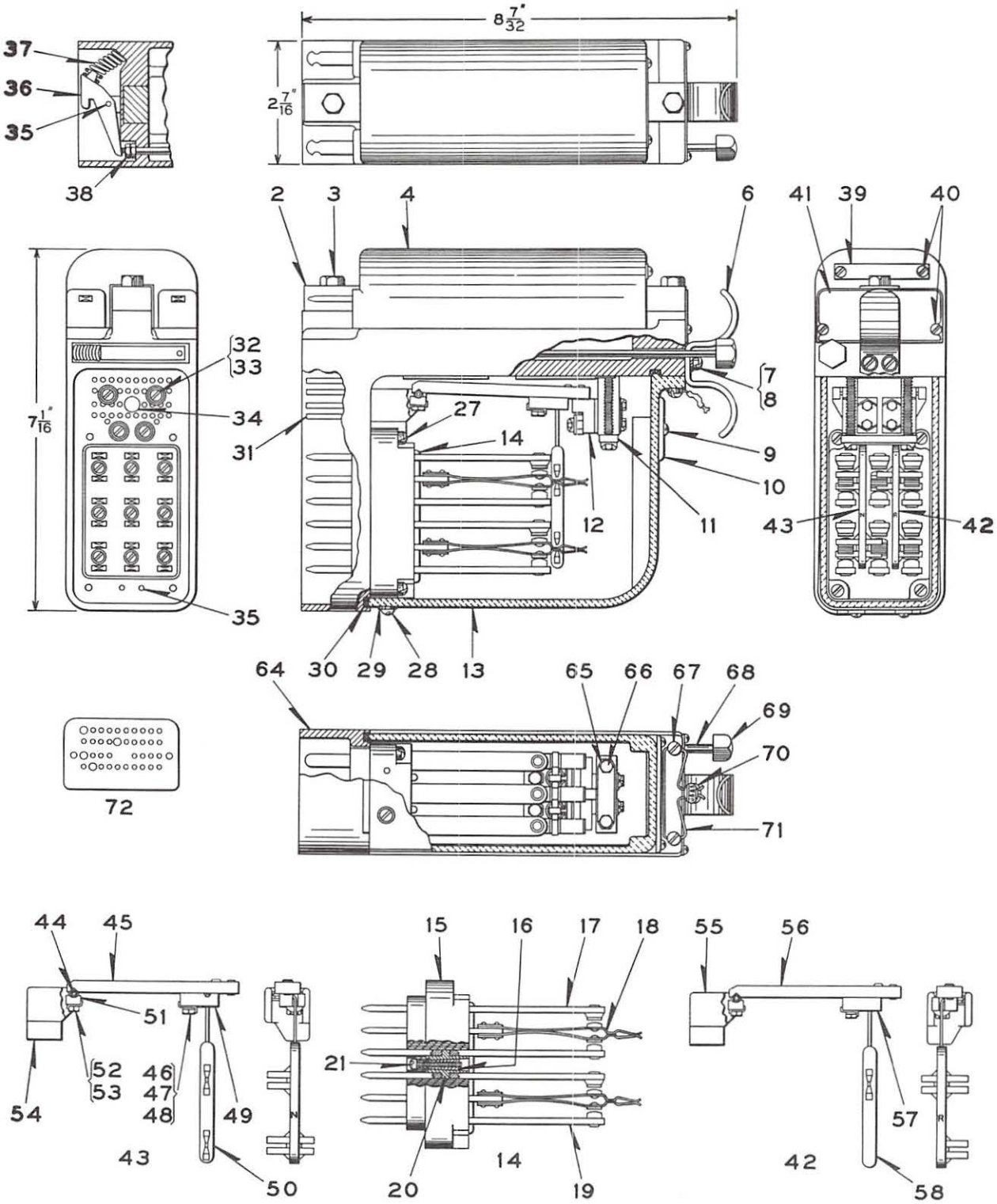

STYLE PN-150BD 6 POINT BIASED

THREE POSITION RELAY

STYLE PN-150BD 6 POINT BIASED THREE POSITION D.C. RELAY

Detail Parts

Indented item descriptions indicate that the references in the "Used On" column refer to this Plate, E3-5.1. All other references refer to the General Plate E3-5.

Order by Plate, Reference, Piece and Abbreviated Description

REF.	PIECE	DESCRIPTION	DRAWING	USED ON
2	UM321799	Core	8101-445	All
3	UJ50016	Cap Screw, 1/4" - 20 x 3/4" hex. head (Tin Pl.)		All
4	UM321647-003	Coil, 100-ohms	D66001-3	A
4a	UM321647	Coil, 400-ohms	D66001-3	Aa
4b	UM321647-001	Coil, 800-ohms	D66001-3	Ab
5	UM321746	Coil Lock (Not Shown)	8735-1205	All
6	UM321821	Handle	8311-181	All
7	UJ52255	Screw, No. 8-32 x 3/8" fil. head steel (Tin Pl.)		All
8	UJ47681	Lock Washer, No. 8 steel (Tin Pl.)		All
9	UJ52665	Screw, No. 4 x 1/4" round head steel sheet metal (Tin Pl.)		All
10	UJ78460	Tag Holder	12770-147	All
11	UM321853	Strap	7826-363	All
12	UM335746	Permanent Magnet (magnetized)	12748-176	All
13	UM321923	Cover	D66001-2	All
14	UN322066	Contact Block Complete, 6F-6B low voltage contacts.	D66001-6	All
15	UJ78469	. Contact Block	12770-149	14
16	UM322455	. Wedge	12770-151	14
17	UN322222	. Front Contact Spring (Silver Imp. Carbon)	8385-2988	14
18	UN322232	. Heel Contact Spring (Silver)	8385-2990	14
19	UN322223	. Back Contact Spring (Silver)	8385-2988	14
20	UJ78470	. Contact Clamp	12770-150	14
21	UJ522092	. Screw, No. 6 - 32 x 7/8" fil. head steel.		14
27	UJ522104	Screw, No. 8 - 32 x 7/8" fil. head steel.		All
28	UJ525030	Screw, No. 6 - 32 x 5/16" round head steel (Tin Pl.).		All
29	UM347631	Washer	8078-1896	All
30	UJ47081	Gasket	8078-1933	All
31	UJ487090	Indexing Pin		All
32	UJ52243	Screw, No. 6-32 x 7/8" fil. head steel (Tin Pl.)		All

REF.	PIECE	DESCRIPTION	DRAWING	USED ON
33	UM291657	Washer	7826-336	All
34	UM335752	Plug	8078-732	All
35	UM301356	Dowel Pin	8097-1049	All
36	UM321728	Latch	8236-72	All
37	UM321861	Spring	7770-716	All
38	UJ480006	Hex. Nut, No. 4-40 steel (Tin Pl.)		All
39	UJ75828	Tag	B35002-14	All
40	UJ525024	Screw, No. 4-40 x 3/16" round head steel (Tin Pl.)		All
41	UJ630351	Name Plate. Orders should specify piece number of relay for which Name Plate is desired	8225-1538	All
42	UN335757	Reverse Armature Complete	D66001-13	All
43	UN335756	Normal Armature Complete	D66001-12	All
44	UM335751	. Pivot	8378-409	42 & 43
45	UN335749	. Armature Complete	8157-550	43
46	UJ463076	. Screw, No. 6-32 x 7/16" hex. head steel (Tin Pl.)		42 & 43
47	UM268021	. Bolt Lock	8486-395	42 & 43
48	UM259785	. Washer	7828-433	42 & 43
49	UM335739	. Operating Arm Support	B35004-4	43
50	UM335753	. Operating Arm	D66001-11	43
51	UM335736	. Pivot Clamp	12748-181	42 & 43
52	UM335755	. Screw	8098-1544	42 & 43
53	UM262770	. Bolt Lock	8486-395	42 & 43
54	UM335737	. Armature Bracket	12770-163	43
55	UM335738	. Armature Bracket	12770-163	42
56	UN335750	. Armature Complete	8157-550	42
57	UM335740	. Operating Arm Support	B35004-4	42
58	UM335754	. Operating Arm	D66001-11	42
64	UM335729	Frame	D66001-1B	All
65	UM262770	Bolt Lock	8486-395	All
66	UM335726	Screw	8098-1569	All
67	UM321747	Screw	8098-1558	All
68	UM321855	Latch Rod	8098-1560	All
69	UM321856	Latch Button	8109-533	All
70	UJ79351	Seal	8988-33	All
71	UA 43013	Seal Wire (Orders should specify length desired)		All
72	UM322078-0402	Indexing Plate for PN-150BD ordinary acting relay with 100-ohm coil	D66001-8	A
72a	UM322078-0401	Indexing Plate for PN-150BD ordinary acting relay with 400-ohm coil	D66001-8	Aa

REF.	PIECE	DESCRIPTION	DRAWING	USED ON
72b	UM322-78-0403	Indexing Plate for PN-150BD ordinary acting relay with 800-ohm coil.	D66001-8	Ab
73	UJ52246	Screw, No. 6-32 x 1-1/4" fil. head steel (Tin Pl.) for attaching Indexing Plate for Mounting Base (Not Shown)		All

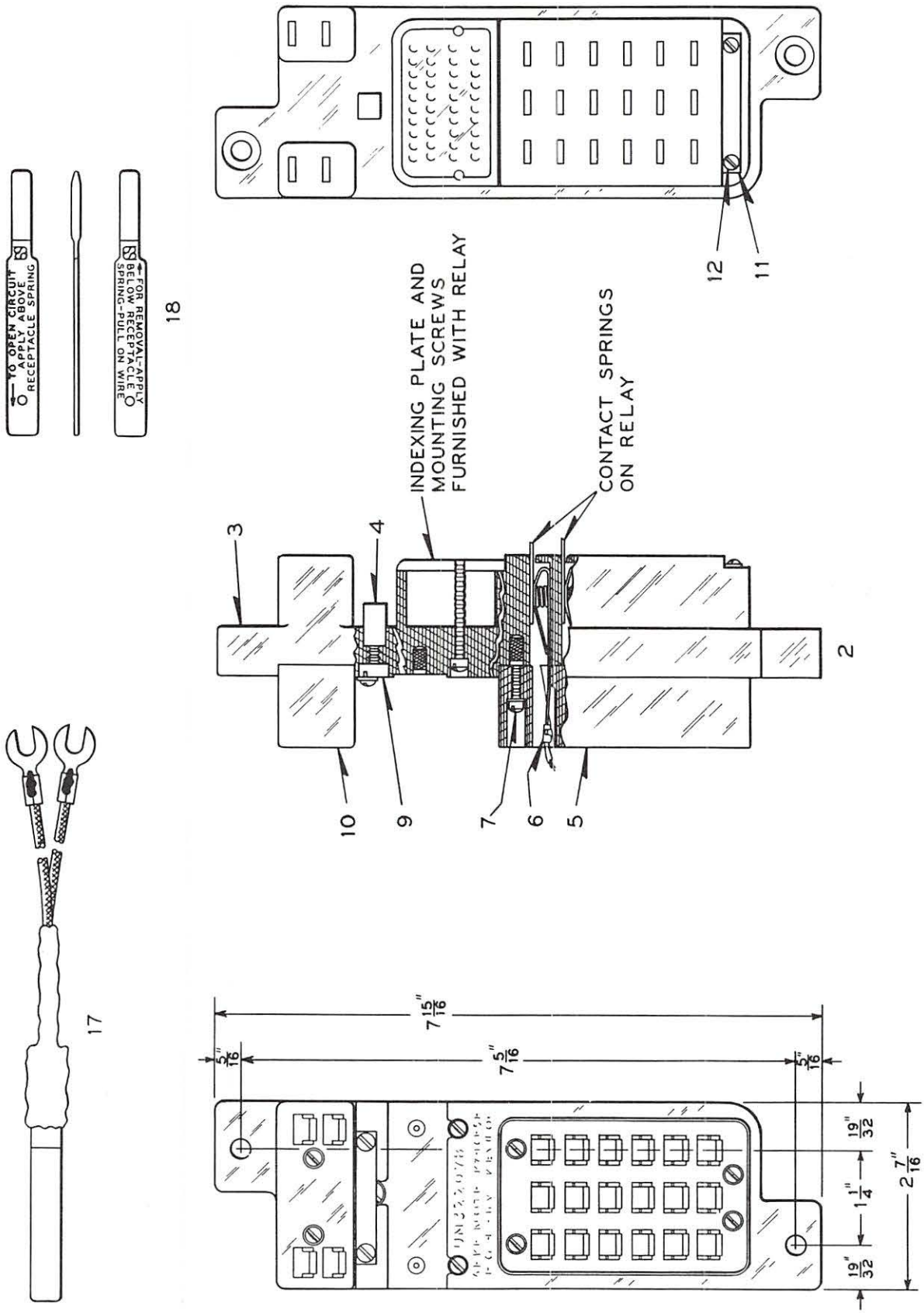

MOUNTING BASE for Style PN-150BD Relay

STYLE PN-150BD 6 POINT BIASED THREE POSITION D.C. RELAY

Detail Parts

MOUNTING BASE

Indented item descriptions indicate that the references in the "Used On" column refer to this Plate, E3-5.2. All other references refer to the General Plate E3-5.

Order by Plate, Reference, Piece and Abbreviated Description

REF.	PIECE	DESCRIPTION	DRAWING	USED ON
2	UN335727	Mounting Base Complete	D66002-1	All
3	UJ78455	. Mounting Base Only	D66003-1	2
4	UM321745	. Strike	8236-71	2
5	UJ77747	. Clamping Plate	B35004-1A	2
6	UN333845	. Contact Receptacle Complete (solderless type)	8385-3012	2
7	UJ522090	. Screw, No. 6-32 x 5/8" fil. head steel (Tin Pl.)		2
9	UM267499	. Nut	8109-383	2
10	UJ78463	. Clamping Block	B35004-2	2
11	UJ75828	. Tag	B35002-14	2
12	UJ525024	. Screw, No. 4-40 x 3/16" round head (Tin Pl.)		2
13	UJ525033	. Screw, 1/4" - 20 x 1-1/4" round head steel (Tin Pl.) (Not shown)		2
14	UJ47711	. Washer (Not Shown)	8078-121	2
15	UJ47775	. Lock Washer, 1/4" steel (Tin Pl.) (Not Shown)		2
16	UJ48002	. Hex. Nut, 1/4" - 20 steel (Tin Pl.) (Not Shown). Note: Refs. 13 to 16 inclusive are for attaching mounting base to rack.		2
17	UN322965	Meter Test Plug	A2586-147	
18	UJ77931	Insulated Test Plug. Used for opening any coil or contact circuit and for removing receptacle springs.	A2586-177	

STYLE PN-150P POWER TRANSFER RELAY

RELAY FEATURES

Full wave rectifier and adjustable calibrating resistor mounted within contact enclosure.

Calibration practically constant between -40°F and 130°F.

Same rectifier and resistor used in factory calibration used in service (more accurate calibration).

Adjustment simplified.

Original calibration longer lasting.

No. 6 contact has stick adjustment.

Contacts: Silver to silver-impregnated carbon front. Silver to silver-impregnated carbon back.

Capacity: Up to 15 amperes first range voltage (up to 30 volts AC or DC).

Plate E3-1 contains general information on all UNION plug-in relays. Greater detail on the PN-150 line may be found on Plate E3-2.

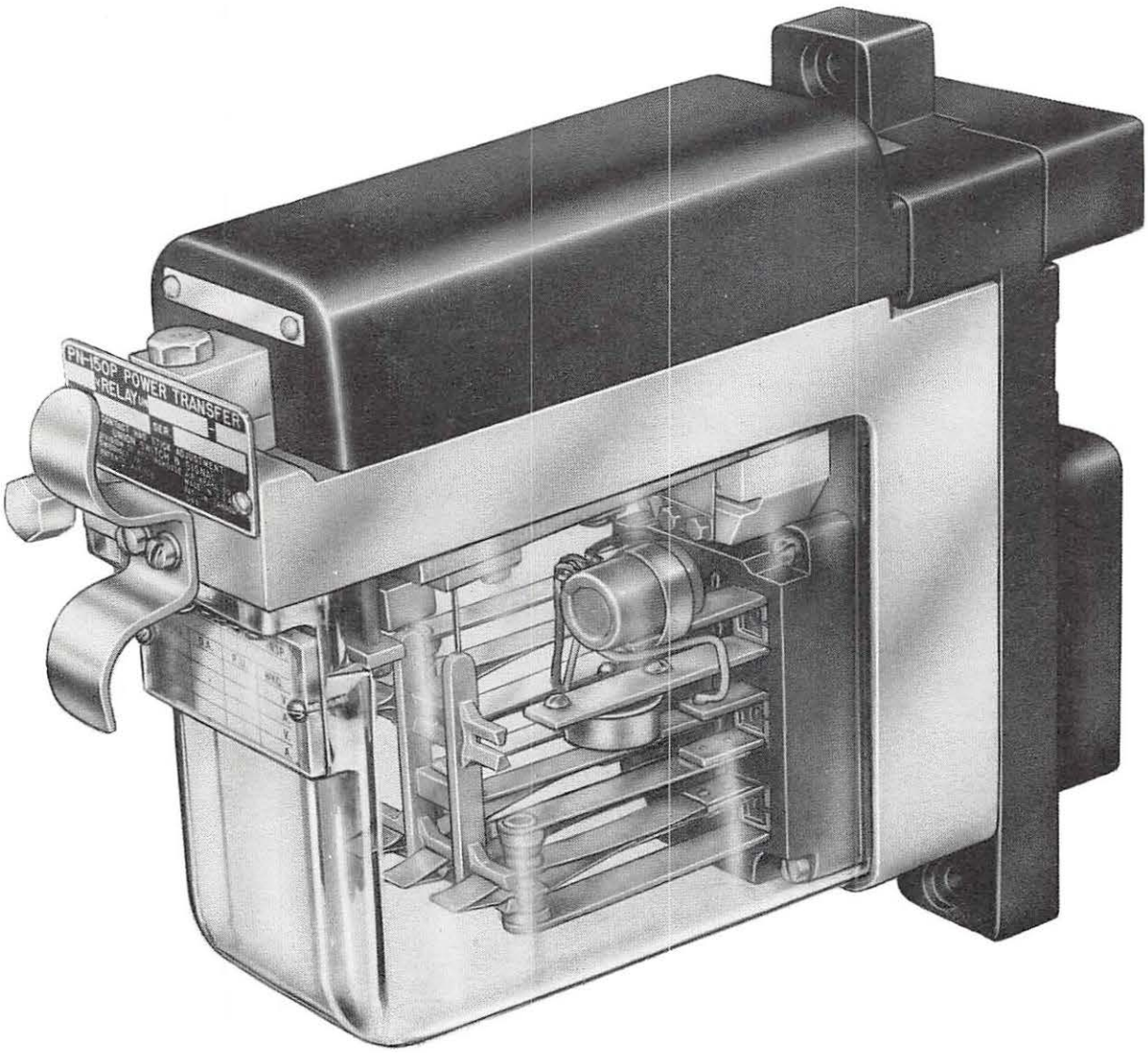

Height 7-1/16", Width 2-7/16", Depth 8-7/32"

STYLE PN-150P POWER TRANSFER RELAY

STYLE PN-150P POWER TRANSFER RELAY

Refer to Plate E3-6.1 for relay details and
Plate E3-6.2 for mounting base details.

Order by Plate, Reference, Piece and Abbreviated Description

Style PN-150P Power Transfer Relay. Ordinary acting. Does not include Mounting Base.					
Ref.	Piece	Contacts	AC Volts	Res. Ohms	Drawing
A	UN322506-001	2F-2B L.V.H.D.	8	100	D66000-11
Aa	UN322506-002	2F-2B L.V.H.D.	10	150	D66000-11
Ab	UN322506-003	2F-2B L.V.H.D.	12	240	D66000-11
B	UN322508-002	4F-4B L.V.H.D.	10	240	D66000-11
Ba	UN322508-003	4F-4B L.V.H.D.	12	400	D66000-11

Mounting Base			
Ref.	Piece	Description	Drawing
C	UN341626	Mounting Base Complete for PN-150P Relay . .	D66002-1

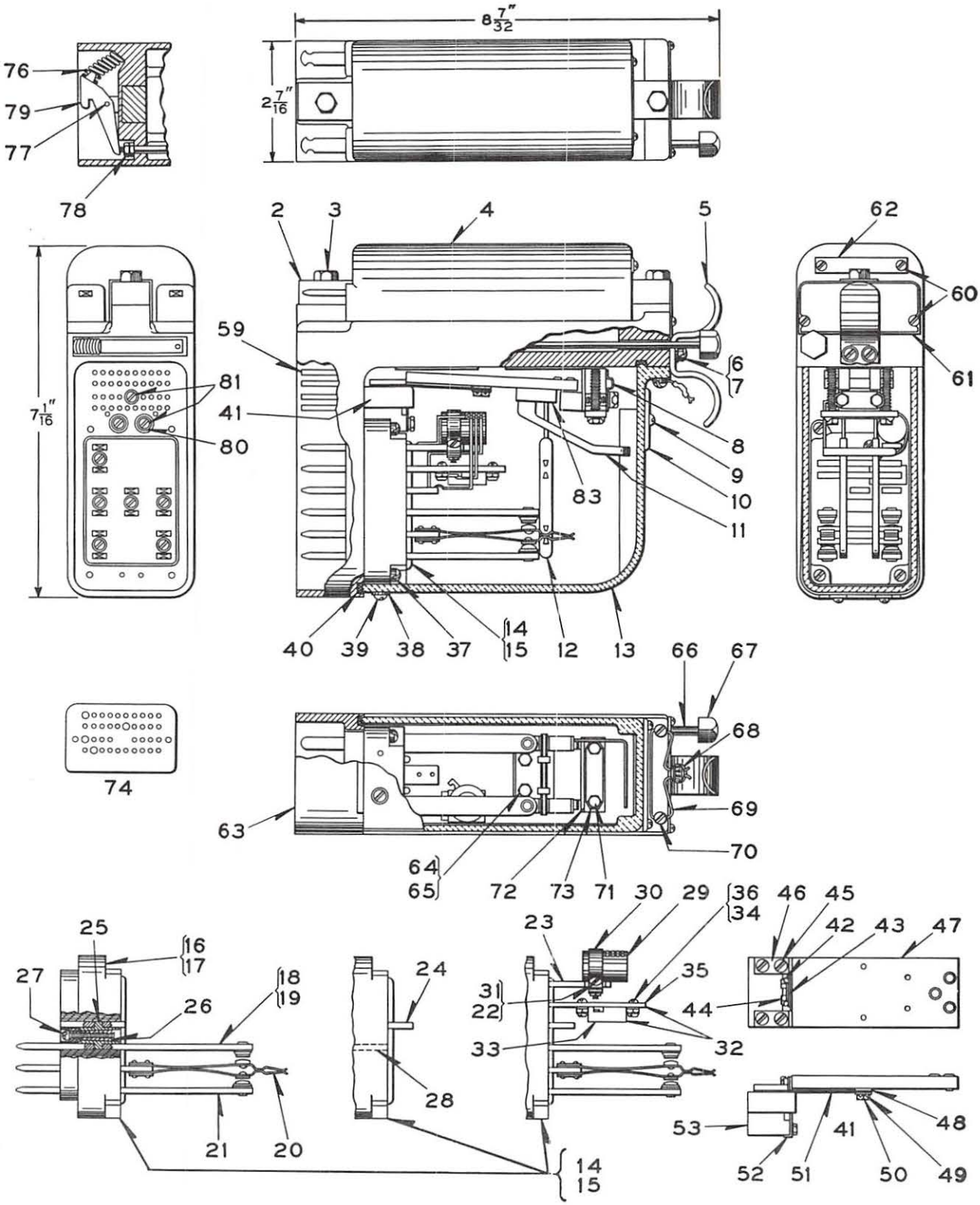

STYLE PN-150P POWER TRANSFER RELAY

STYLE PN-150P POWER TRANSFER RELAY

Detail Parts

Indented item descriptions indicate that the references in the "Used On" column refer to this Plate, E3-6.1. All other references refer to the General Plate E3-6.

Order by Plate, Reference, Piece and Abbreviated Description

REF.	PIECE	DESCRIPTION	DRAWING	USED ON
2	UM321799	Core	8101-445	All
3	UJ50016	Cap Screw, 1/4" -20 x 3/4" hex. head (Tin Pl.)		All
4	UM321647-003	Coil, 100-ohms	D66001-3	A
4a	UM341610	Coil, 150-ohms	D66001-3	Aa
4b	UM333975	Coil, 240-ohms	D66001-3	Ab, B
4c	UM321647	Coil, 400-ohms	D66001-3	Ba
5	UM321821	Handle	8311-181	All
6	UJ52255	Screw, No. 8-32 x 3/8" fil. head steel (Tin Pl.)		All
7	UJ47681	Lock Washer, No. 8 steel (Tin Pl.)		All
8	UM332423	Permanent Magnet Assembly (Magnetized)	12748-151	A thru Ab
8a	UM344418	Permanent Magnet Assembly (Magnetized)	12748-151	B, Ba
9	UJ52665	Screw, No. 4 x 1/4" round head sheet metal (Tin Pl.)		All
10	UJ78460	Tag Holder	12770-147	All
11	UM321894	Indicator	12748-147	All
12	UJ78488	Operating Arm	D66001-10	All
13	UM321923	Cover	D66001-2	All
14	UN341587	Contact Block Complete, 2F-2B low voltage heavy duty contacts	D66001-6	A thru Ab
15	UN344116	Contact Block Complete, 4F-4B low voltage heavy duty contacts	D66001-6	B, Ba
16	UM341586	. Contact Block	12770-168	14
17	UM344114	. Contact Block	12770-168	15
18	UN322222	. Front Contact Spring (Silver Imp. Carbon)	8385-2988	14
19	UN344115	. Front Contact Spring (Silver Imp. Carbon)	8385-3027	15
20	UN338256	. Heel Contact Spring (Silver)	8385-3016	14 & 15
21	UN341576	. Back Contact Spring (Silver Imp. Carbon)	8385-3024	14 & 15
22	UJ48207	. Nut, No. 4-40		14 & 15
23	UM341531	. Rectifier Finger	8385-3023	14 & 15
24	UM322086	. Terminal Finger	8385-2989	14 & 15
25	UJ78470	. Contact Clamp	12770-150	14 & 15

REF.	PIECE	DESCRIPTION	DRAWING	USED ON
26	UM322455	. Wedge	12770-151	14 & 15
27	UJ522092	. Screw, No. 6-32 x 7/8" fil. head steel (Tin Pl.)		14 & 15
28	UM341600	. Dummy Contact Spring	8385-3025	14
29	UN341859	. Rectifier	B35008-54	14 & 15
30	UM371097	. Rectifier Clamp	B35060-9	14 & 15
31	UJ525074	. Screw, No. 4-40 x 3/8" round head steel (Tin Pl.)		14 & 15
32	UN349993	. Potentiometer Complete	B35060-10	14 & 15
33	UM344971	. . Adjustable Resistor	9065-489	32
34	UJ525011	. . Screw, No. 4-40 x 1/4" round head steel (Tin (Pl.)		14 & 15
35	UM341530	. . Potentiometer Finger	8385-3022	32
36	UJ48207	. . Nut, No. 4-40		32
37	UJ522104	Screw, No. 8-32 x 7/8" fil. head steel		All
38	UM347641	Washer	8078-1896	All
39	UJ525030	Screw, No. 6-32 x 5/16" round head steel (Tin Pl.)		All
40	UJ47081	Gasket	8078-1933	All
41	UN341612	Armature Complete. For 2F-2B Relays	D66001-5	A thru Ab
41a	UN344118	Armature Complete. For 4F-4B Relays	D66001-5	B, Ba
42	UM321754	. Bolt Lock	8486-446	41, 41a
43	UM321850	. Strap Washer	7828-430	41, 41a
44	UM321787	. Screw	8098-1559	41, 41a
45	UJ521096	. Screw, No. 6-32 x 3/8" flat head steel (Tin Pl.)		41, 41a
46	UM321849	. Washer	7828-461	41, 41a
47	UN341611	. Armature	8157-547	41
47a	UN344117	. Armature	8157-547	41a
48	UM321851	. Strap Washer	7828-430	41, 41a
49	UM321755	. Bolt Lock	8486-446	41, 41a
50	UJ463075	. Screw, No. 6-32 x 1/4" hex. head steel (Tin Pl.)		41, 41a
51	UM321819	. Horizontal Spring	8735-1206	41, 41a
52	UM321820	. Vertical Spring	8735-1206	41, 41a
53	UM321744	. Armature Bracket	12770-144	41, 41a
59	UJ487090	Indexing Pin		All
60	UJ525024	Screw, No. 4-40 x 3/16" round head steel (Tin Pl.)		All
61	UJ630899	Name Plate. Orders should specify piece number of relay for which Name Plate is desired	8225-1615	All
62	UJ75828	Tag	B35002-14	All
63	UM341566	Frame	D66001-16	All
64	UM275388	Bolt Lock	8486-432	All
65	UJ463076	Screw, No. 6-32 x 7/16" hex. head steel (Tin Pl.)		All
66	UM321855	Latch Rod	8098-1560	All

REF.	PIECE	DESCRIPTION	DRAWING	USED ON
67	UM321856	Latch Button	8109-533	All
68	UJ79351	Seal	8988-33	All
69	UA43013	Seal Wire (Orders should specify length desired)		All
70	UM321747	Screw	8098-1558	All
71	UM327179	Screw (non-magnetic)	8098-1569	All
71a	UJ463078	Screw, No. 8 - 32 x 1-1/4" hex. head steel (Tin Pl.) To be used when needed in calibration		All
72	UM321853	Strap	7826-363	All
73	UM262770	Bolt Lock	8486-395	All
74	UM322078-0601	Indexing Plate for PN-150P relay having 2F-2B contacts and 100-ohm coil	D66001-8	A
74a	UM322078-0602	Indexing Plate for PN-150P relay having 2F-2B contacts and 150-ohm coil	D66001-8	Aa
74b	UM322078-0603	Indexing Plate for PN-150P relay having 2F-2B contacts and 240-ohm coil	D66001-8	Ab
74c	UM322078-0802	Indexing Plate for PN-150P relay having 4F-4B contacts and 240-ohm coil	D66001-8	B
74d	UM322078-0803	Indexing Plate for PN-150P relay having 4F-4B contacts and 400-ohm coil	D66001-8	Ba
75	UJ52246	Screw, No. 6 - 32 x 1-1/4" fil. head steel (Tin Pl.) for attaching Indexing Plate to Mounting Base (Not Shown)		All
76	UM321861	Spring	7770-716	All
77	UM301356	Dowel	8097-1049	All
78	UJ480006	Hex. Nut, No. 4 - 40 steel (Tin Pl.)		All
79	UM321728	Latch	8236-72	All
80	UM291657	Washer	7826-336	All
81	UJ52243	Screw, No. 6 - 32 x 7/16" fil. head steel (Tin Pl.)		All
82	UM321746	Coil Lock (Not Shown)	8735-1205	All
83	UJ78467	Operating Arm Support	12770-148	All

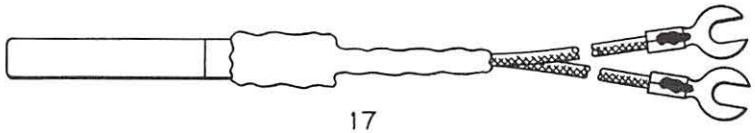

17

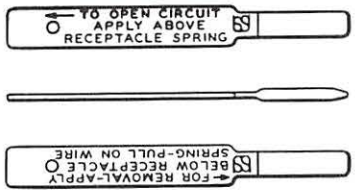

18

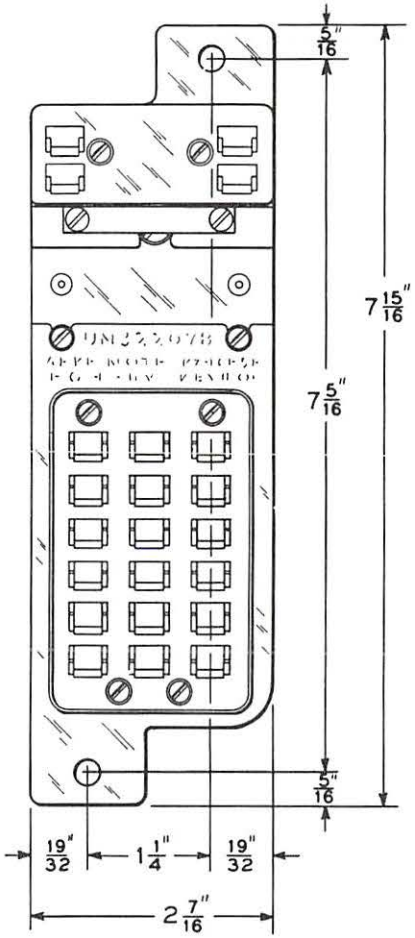

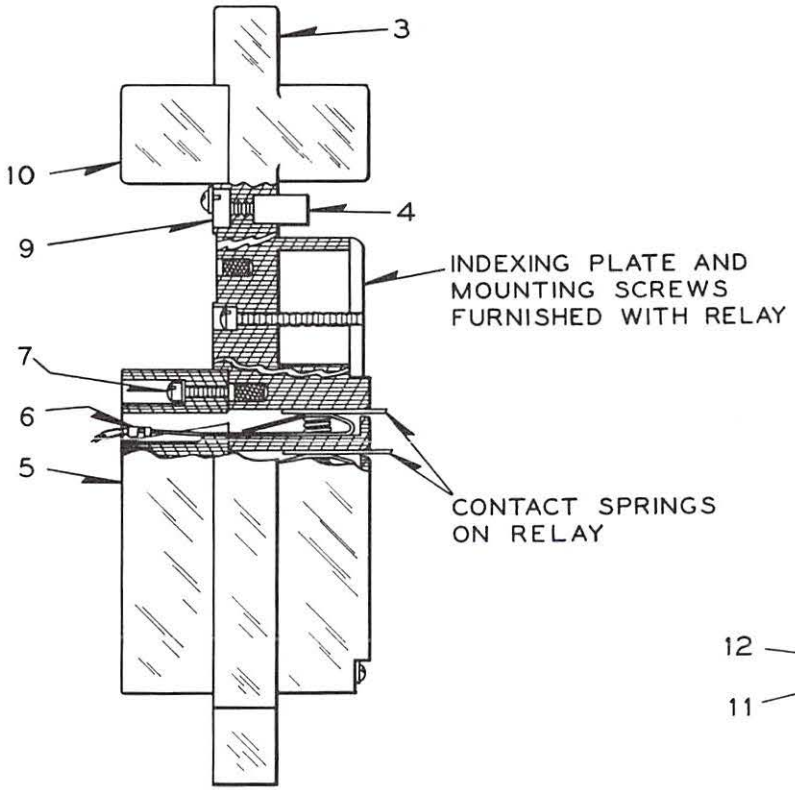

2

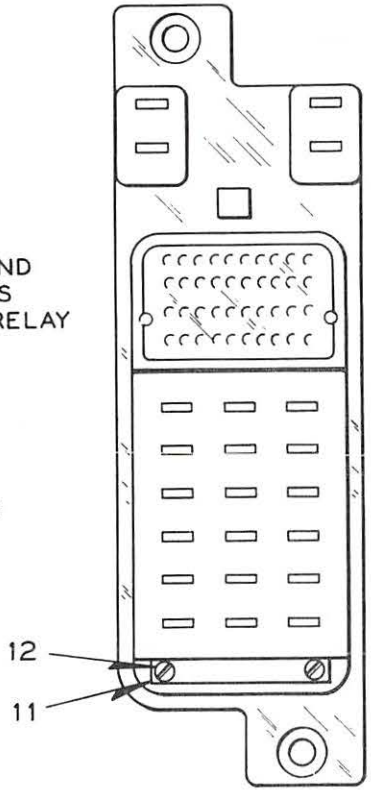

MOUNTING BASE for Style PN-150P Relay

STYLE PN-150P POWER TRANSFER RELAY

Detail Parts

MOUNTING BASE

Indented item descriptions indicate that the references in the "Used On" column refer to this Plate, E3-6.2. All other references refer to the General Plate E3-6.

Order by Plate, Reference, Piece and Abbreviated Description

REF.	PIECE	DESCRIPTION	DRAWING	USED ON
2	UN341626	Mounting Base Complete	D66002-1	All
3	UJ78455	. Mounting Base Only	D66003-1	2
4	UN321745	. Strike	8236-71	2
5	UJ78495	. Clamping Plate	B35004-1B	2
6	UN333845	. Contact Receptacle Complete (solderless type)	8385-3012	2
7	UJ522090	. Screw, No. 6-32 x 5/8" fil. head steel (Tin Pl.)		2
9	UM267499	. Nut	8109-383	2
10	UJ78463	. Clamping Block	B35004-2	2
11	UJ75828	. Tag	B35002-14	2
12	UJ525024	. Screw, No. 4-40 x 3/16" round head (Tin Pl.)		2
13	UJ525033	. Screw, 1/4" -20 x 1-1/4" round head steel (Tin Pl.) (Not Shown)		2
14	UJ47711	. Washer (Not Shown)	8078-121	2
15	UJ47775	. Lock Washer, 1/4" steel (Tin Pl.) (Not Shown)		2
16	UJ48002	. Hex. Nut, 1/4" - 20 steel (Tin Pl.) (Not Shown)		2
		Note: Refs. 13 to 16 inclusive are for attaching mounting base to rack.		
17	UN322965	Meter Test Plug	A2586-147	
18	UJ77931	Insulated Test Plug. Used for opening any coil or contact circuit and for removing receptacle springs	A2586-177	

STYLE PN-150BL LIGHT-OUT BIASED NEUTRAL D.C. RELAY

RELAY FEATURES

Similar to PN-150B except that in the space usually taken by the numbers 4, 5 and 6 contacts is a half-wave copper-oxide rectifier.

Integral rectifier permits more accurate calibration because the same rectifier used for calibration in the factory is also used in service.

UN322510-001 can be used on any combination of signal lamps requiring between 0.85 and 3.0 amperes. (See Fig. 1)

UN322510-002 should be used where only small currents are available, such as the current from a 5W-10V lamp which is approximately 0.5 amperes. (See Fig. 1)

UN322510-003 has a double wound coil of 0.3 and 175 ohms. It can be used anywhere that UN322510-001 can be used but also provides a high resistance winding for cold filament checks. (See Fig. 2)

Plate E3-1 contains general information on all UNION plug-in relays. Greater detail on the PN-150 line may be found on Plate E3-2.

CONTACTS

Silver to silver impregnated carbon front. Silver to silver back.

Contact Capacity: 4 amperes up to 30 volts D.C. or 175 volts A.C.

RELAY TESTING

Opening the circuit of the relay for testing should only be done at either space T1 or T2 as indicated on the mounting base. Opening the circuit at a coil connection may result in damage to the rectifier due to an overvoltage.

Time
G.U. .10 sec.
D.O. .10 " } appropriate

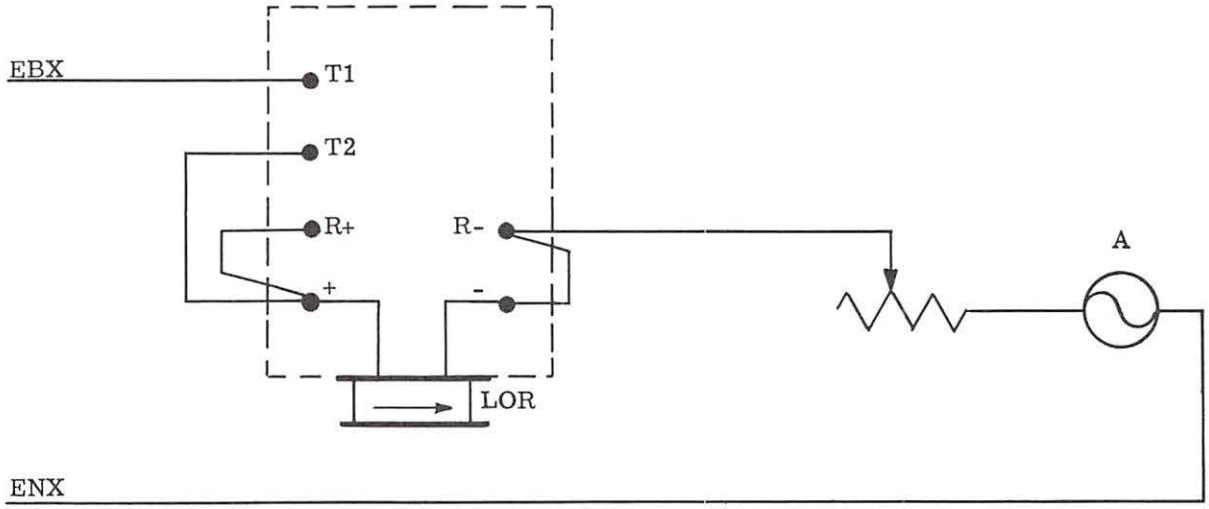

Figure 1...Typical Circuit for Hot Filament Check using Single Coil PN-150BL Light-Out Relay

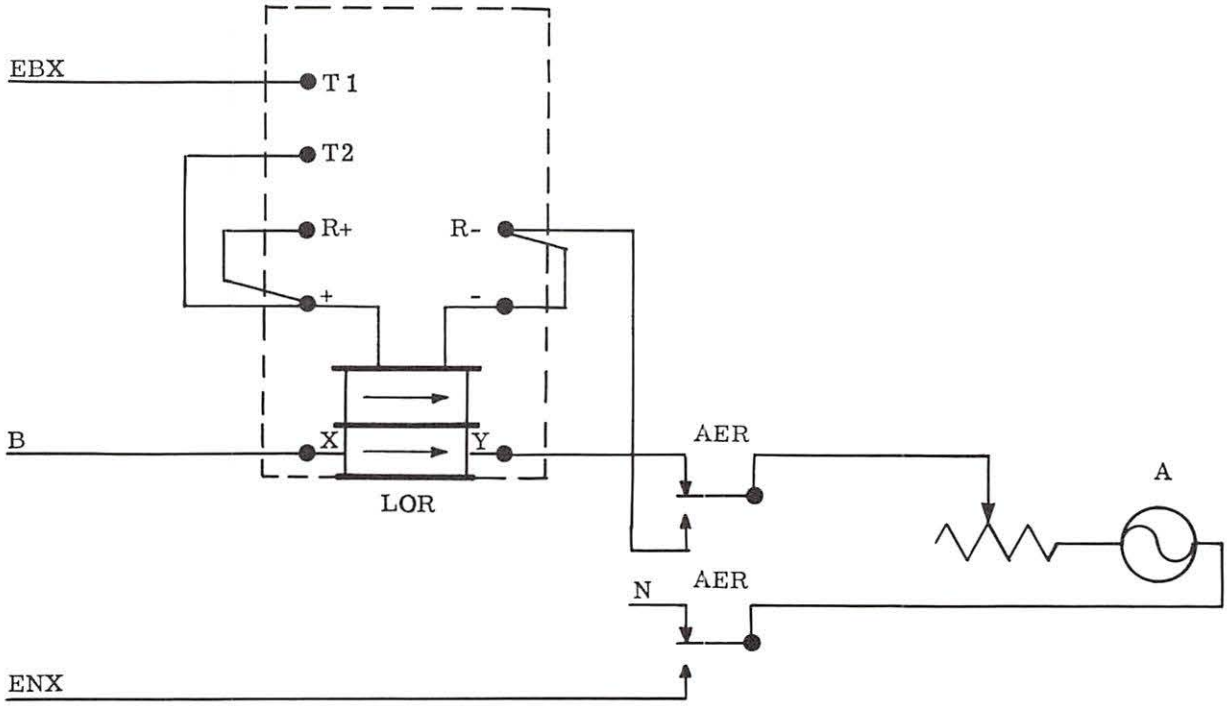

Figure 2...Typical Circuit for Cold Filament Check Using Double Coil PN-150BL Light-Out Relay

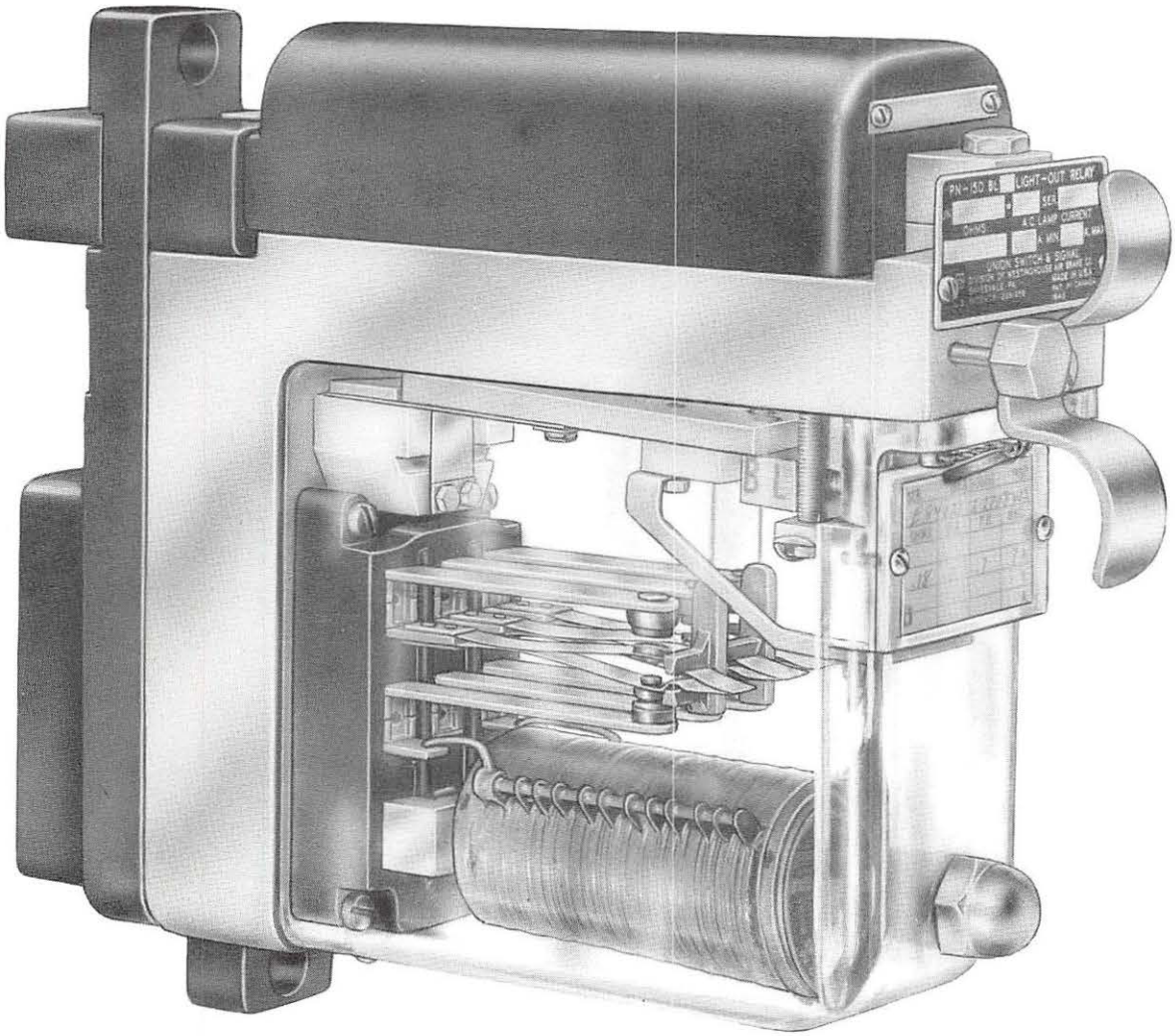

Height 7-1/16", Width 2-7/16", Depth 8-7/32"

STYLE PN-150BL LIGHT-OUT BIASED NEUTRAL D.C. RELAY

STYLE PN-150BL LIGHT-OUT BIASED NEUTRAL D.C. RELAY

Refer to Plate E3-7.1 for relay details and
Plate E3-7.2 for mounting base details.

Order by Plate, Reference, Piece and Abbreviated Description

Style PN-150BL Light-Out Biased Neutral Relay Does not include mounting base					
REF.	PIECE	CONTACTS	COIL RESISTANCE (OHMS)	OPERATES ON LAMP CURRENT (AMPERES)	DRAWING
A	UN322510-001	3F-3B Low Voltage	0.18	0.85 to 3.0	D66000-16
Aa	UN322510-002	3F-3B Low Voltage	0.7	0.4 to 3.0	D66000-16
Ab	UN322510-003	3F-3B Low Voltage	*0.3 175	0.85 to 3.0	D66000-16

* Double wound - 175 ohms to two lower terminals marked X and Y on mounting base

Mounting Base			
REF.	PIECE	DESCRIPTION	DRAWING
B	UN344874	Mounting Base Complete for PN-150BL Relays	D66002-1

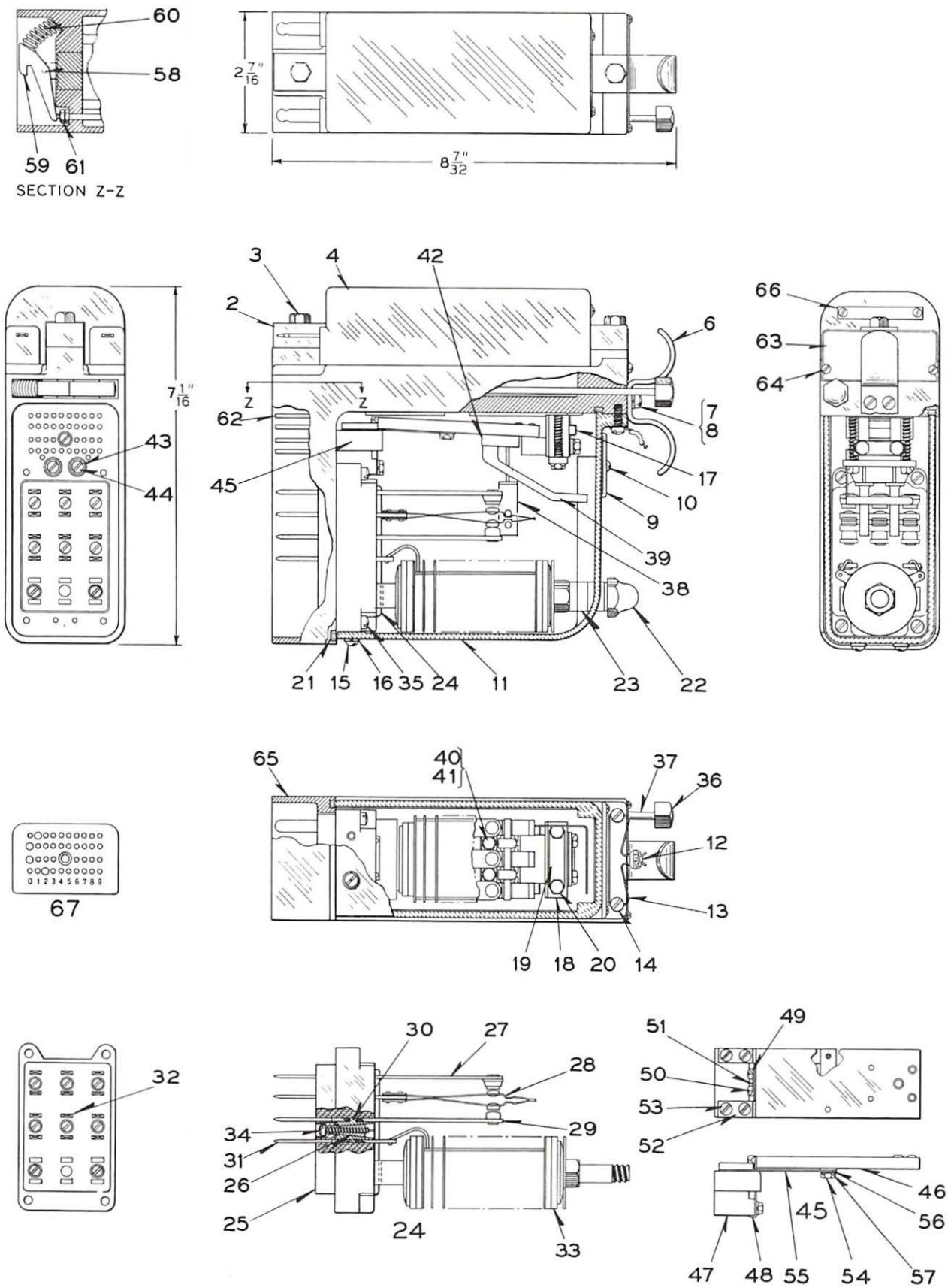

STYLE PN-150BL LIGHT-OUT BIASED NEUTRAL D.C. RELAY

STYLE PN-150BL LIGHT-OUT BIASED NEUTRAL D.C. RELAY

Detail Parts

Indented item descriptions indicate that the references in the "Used On" column refer to this Plate E3-7.1. All other references refer to the General Plate E3-7.

Order by Plate, Reference, Piece and Abbreviated Description

REF.	PIECE	DESCRIPTION	DRAWING	USED ON
2	UM321799	Core	8101-445	All
3	UJ50016	Cap Screw, 1/4"-20 x 3/4" hex. hd. steel (Tin Pl.)		All
4	UM344870	Coil, 0.18 - ohms	D66001-3	A
4a	UM347256	Coil, 0.7 - ohms	D66001-3	Aa
4b	UM348086	Coil, 0.3 - 175 ohms	D66001-3	Ab
5	UM321746	Coil Lock (Not Shown)	8735-1205	All
6	UM321821	Handle	8311-181	All
7	UJ52255	Screw, No. 8-32 x 3/8" fil. hd. steel (Tin Pl.)		All
8	UJ47681	Lock Washer, No. 8 steel (Tin Pl.)		All
9	UJ78460	Tag Holder	12770-147	All
10	UJ52665	Screw, No. 4 x 1/4" rd. hd. steel sheet metal (Tin Pl.)		All
11	UM345539	Cover	D66001-2	All
12	UJ79351	Seal	8988-33	All
13	UA43013	Seal Wire		All
14	UM321747	Screw	8098-1558	All
15	UJ525030	Screw, No. 6-32 x 5/16" rd. hd. steel (Tin Pl.)		All
16	UM347631	Washer	8078-1896	All
17	UM346703	Permanent Magnet	12748-151	All
18	UM321853	Strap	7826-363	All
19	UM262770	Bolt Lock	8486-395	All
20	UJ463078	Bolt, No. 8-32 x 1-1/4" hex. hd. steel (Tin Pl.)		All
21	UJ47081	Gasket	8078-1933	All
22	UM283623	Nut	8265-253	All
23	UJ75457	Bushing	8078-1792	All
24	UN344867	Contact Block Complete, 3F-3B low voltage contacts	D66001-18	All
25	UM344866	. Contact Block	12770-168	24
26	UM322455	. Wedge	12770-151	24
27	UN322222	. Front Contact Spring (Silver Imp. Carbon Contact)	8385-2988	24
28	UN322232	. Heel Contact Spring (Silver Contact)	8385-2990	24
29	UN322223	. Back Contact Spring (Silver Contact)	8385-2988	24

REF.	PIECE	DESCRIPTION	DRAWING	USED ON
30	UM376130	. Contact Clamp	12770-150	24
31	UM344871	. Contact Finger	8385-3031	24
32	UM341600	. Dummy Contact	8385-3025	24
33	UN344873	. Rectifier Complete	12558-74	24
34	UJ522092	. Screw, No. 6-32 x 7/8" fil. hd. steel (Tin Pl.)		24
35	UJ522104	Screw, No. 8-32 x 7/8" fil. hd. steel (Tin Pl.)		All
36	UM321856	Latch Button	8109-533	All
37	UM321855	Latch Rod	8098-1560	All
38	UM344868	Operating Arm	D66001-17	All
39	UM321894	Indicator	12748-147	All
40	UM275388	Bolt Lock	8486-432	All
41	UJ463076	Screw, No. 6-32 x 7/16" hex. hd. steel (Tin Pl.)		All
42	UJ78467	Operating Arm Support	12770-148	All
43	UM291657	Washer	7826-336	All
44	UJ52243	Screw, No. 6-32 x 7/16" fil. hd. steel (Tin Pl.)		All
45	UN321876	Armature Assembly Complete	D66001-5	All
46	UN321872	. Armature Complete	8157-547	45
47	UM321744	. Armature Bracket	12770-144	45
48	UM321820	. Vertical Spring	8735-1206	45
49	UM321754	. Bolt Lock	8486-446	45
50	UM321787	. Screw	8098-1559	45
51	UM321850	. Washer Strap	7828-430	45
52	UM321849	. Washer	7828-461	45
53	UJ521096	. Screw, No. 6-32 x 3/8" flat hd. steel (Tin Pl.)		45
54	UJ463075	. Screw, No. 6-32 x 1/4" hex. hd. steel (Tin Pl.)		45
55	UM321819	. Horizontal Spring	8735-1206	45
56	UM321851	. Washer Strap	7828-430	45
57	UM321755	. Bolt Lock	8486-446	45
58	UM301356	Dowel Pin	8097-1049	All
59	UM321728	Latch	8236-72	All
60	UM321861	Spring	7770-716	All
61	UJ480006	Nut, No. 4-40 hex. steel (Tin Pl.)		All
62	UJ487090	Indexing Pin		All
63	UJ630911	Name Plate (Orders should specify piece number for which name plate is desired)	8225-1625	All
64	UJ525024	Screw, No. 4-40 x 3/16" rd. hd. steel self tapping (Tin Pl.)		All
65	UM321761	Frame	D66001-1A	All
66	UJ75828	Tag	B35002-14	All
67	UM322078-1001	Indexing Plate for PN-150BL Light-Out Neutral Relay with 0.18 ohm coil	D66001-8	A

REF.	PIECE	DESCRIPTION	DRAWING	USED ON
67a	UM322078-1002	Indexing Plate for PN-150BL Light-Out Neutral Relay with 0.7 ohm coil	D66001-8	Aa
67b	UM322078-1003	Indexing Plate for PN-150BL Light-Out Neutral Relay with 0.3 - 175 ohm coil	D66001-8	Ab
68	UJ52246	Screw, No. 6-32 x 1-1/4" fil. hd. steel (Tin Pl.) (Not Shown)		All

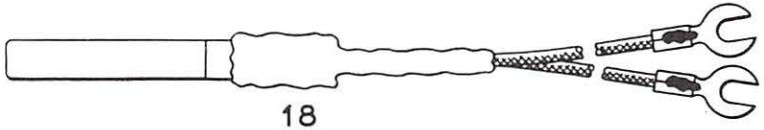

18

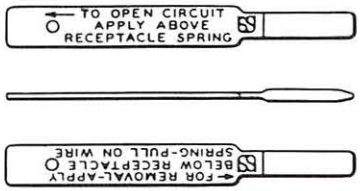

19

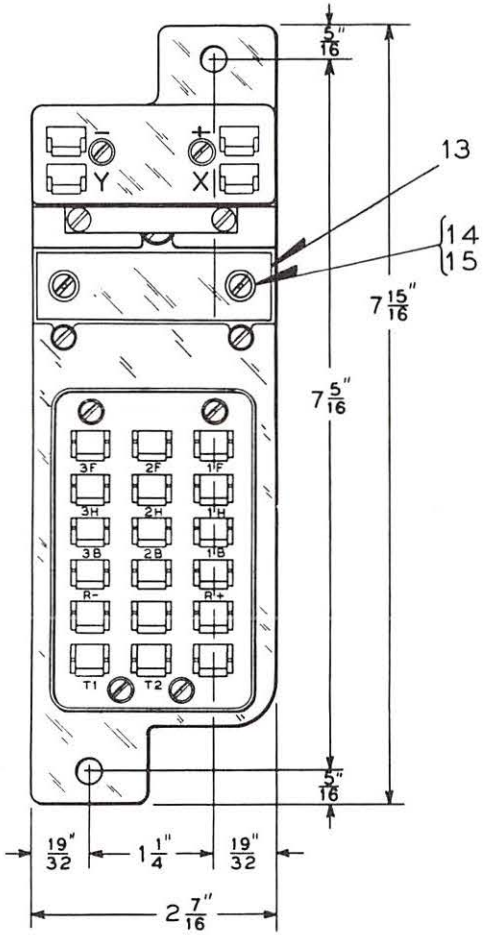

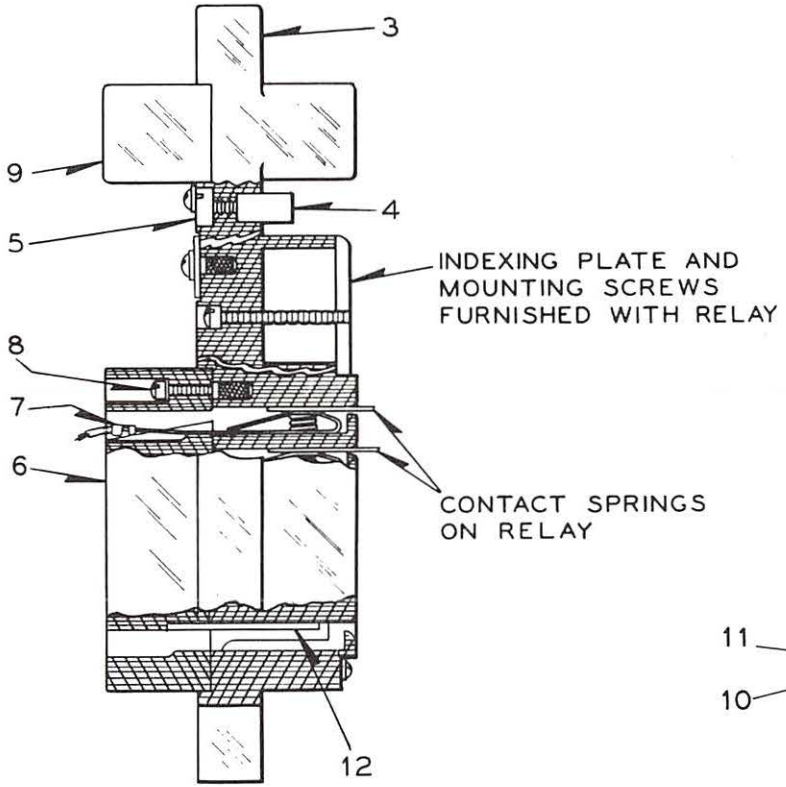

2

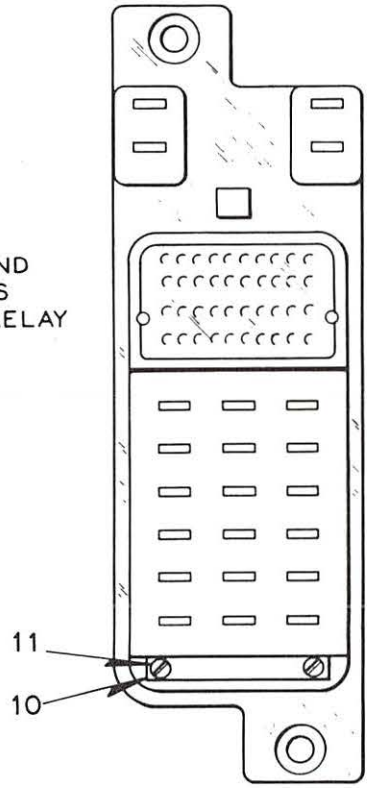

MOUNTING BASE for Style PN-150BL Relay

STYLE PN-150BL LIGHT-OUT BIASED NEUTRAL D.C. RELAY

Detail Parts

MOUNTING BASE

Indented item descriptions indicate that the references in the "Used On" column refer to this Plate, E3-7.2. All other references refer to the General Plate E3-7.

Order by Plate, Reference, Piece and Abbreviated Description

REF.	PIECE	DESCRIPTION	DRAWING	USED ON
2	UN344874	Mounting Base Complete	D66002-1	All
3	UJ78455	. Mounting Base Only	D66003-1	2
4	UM321745	. Strike	8236-71	2
5	UM267499	. Nut	8109-383	2
6	UM372880	. Clamping Plate	B35004-1D	2
7	UN333845	. Contact Receptacle Complete	8385-3012	2
8	UJ522090	. Screw, No. 6-32 x 5/8" fil. hd. steel (Tin Pl.)		2
9	UJ78463	. Clamping Block	B35004-2	2
10	UJ75828	. Tag	B35002-14	2
11	UJ525024	. Screw, No. 4-40 x 3/16" rd. hd. self tapping (Tin Pl.)		2
12	UM372278	. Connector	B35065-5	2
13	UM372521	. Instruction Tag	B35002-24	2
14	UJ51621	. Screw, No. 6-32 x 1/4" rd. hd. brass (Ni. Pl.)		2
15	UM347631	. Washer	8078-1896	2
16	UJ522138	. Screw, 1/4-20 x 3/4" fil. hd. (Not Shown)	8078-121	2
17	UJ47711	. Washer (Not Shown)	8078-121	2
		Note: Refs. 16 & 17 are for attaching mounting base to rack.		
18	UN322965	Meter Test Plug	A2586-147	
19	UJ77931	Insulated Test Plug (for opening any coil or contact circuit and for removing receptacle springs)	A2586-177	

STYLE PP-151 MAGNETIC STICK D.C. RELAY

RELAY FEATURES

Armature is pivoted in center.

Two permanent magnets of like polarity supply holding force on the armature.

Both permanent magnets are easily accessible to simplify adjustment.

Armature remains in last operated position with full contact pressure if the coil is de-energized.

Contacts: Silver to silver impregnated carbon.

Contact Capacity: 4 amperes up to 30 volts D.C. or 175 volts A.C.

Application: Designed for use in polarized line circuits, such as traffic circuits, where a reliable polar relay is required that will not change position if the power source fails.

Plate E3-1 contains general information on all UNION plug-in relays. Greater detail on the PN-150 line may be found on Plate E3-2.

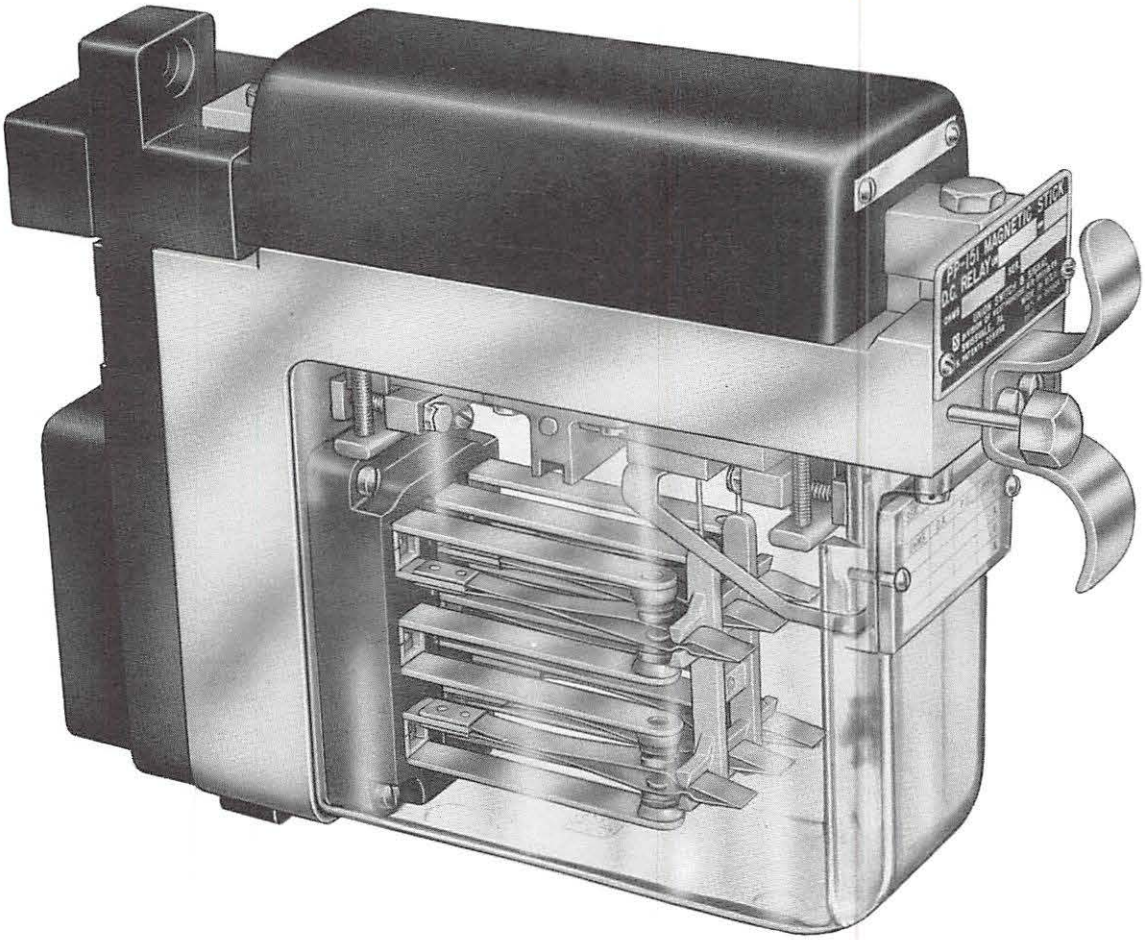

Height 7-1/16", Width 2-7/16", Depth 8-7/32"

STYLE PP-151 MAGNETIC STICK D.C. RELAY

STYLE PP-151 MAGNETIC STICK D.C. RELAY

Refer to Plate E3-1000.1 for relay details and
Plate E3-1000.2 for mounting base details.

* For applications of locally energized relays in which speed of operation is not important, battery voltages given would be suitable.

Order by Plate, Reference, Piece and Abbreviated Description

Style PP-151 6 Point Magnetic Stick D.C. Relay. Does not include Mounting Base.					
Ref.	Piece	Contact	Res. Ohms	* Nominal Local Battery Voltage	Drawing
A	UN322507-001	6N-6R Low Voltage	240	8	D66000-14
Aa	UN322507-002	6N-6R Low Voltage	400	10, 12, 14	D66000-14

Mounting Base			
Ref.	Piece	Description	Drawing
B	UN341785	Mounting Base Complete for PP-151 Relay	D66002-1

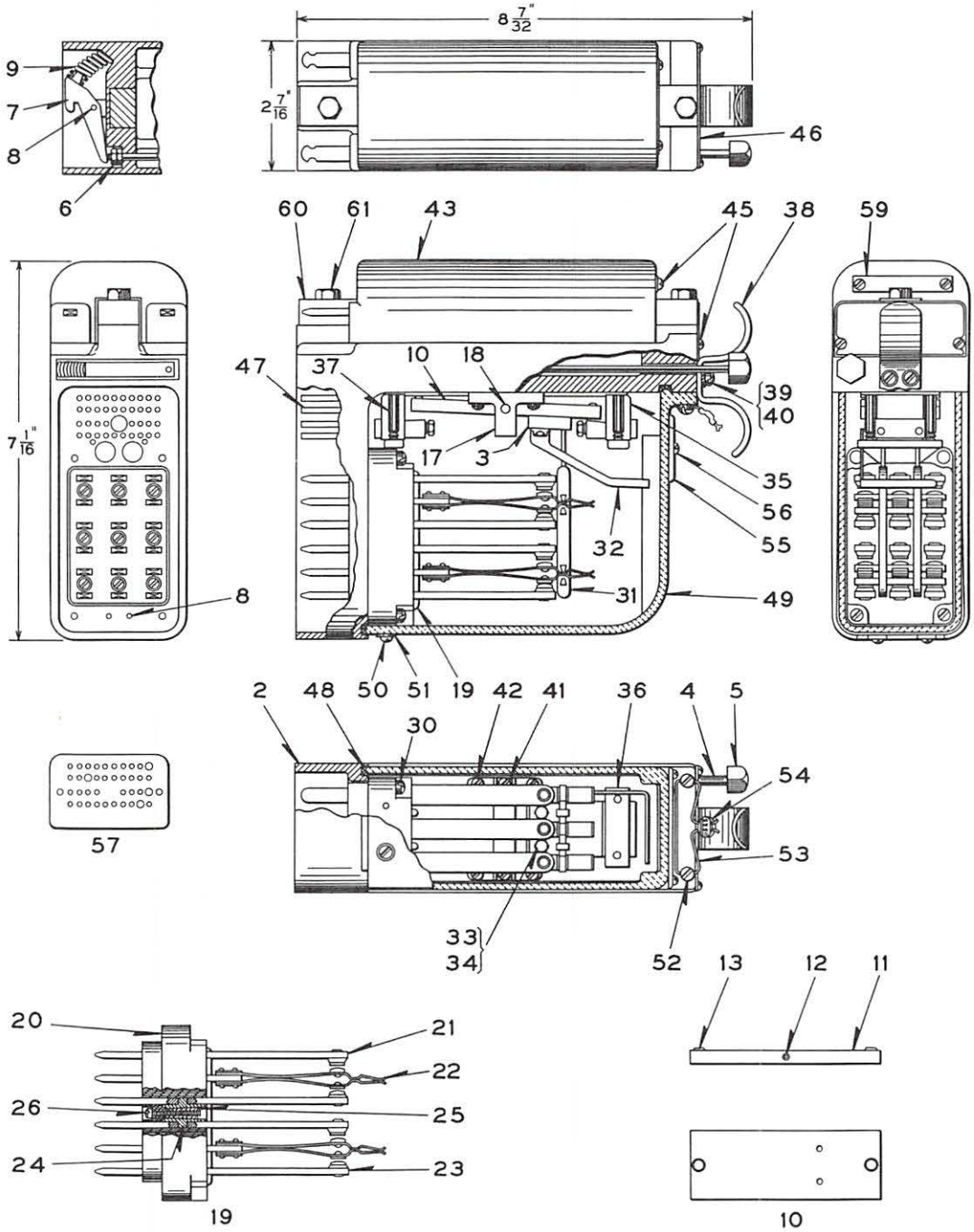

STYLE PP-151 MAGNETIC STICK D.C. RELAY

STYLE PP-151 MAGNETIC STICK D.C. RELAY

Detail Parts

Indented item descriptions indicate that the references in the "Used On" column refer to this Plate, E3-1000.1. All other references refer to the General Plate E3-1000.

Order by Plate, Reference, Piece and Abbreviated Description

REF.	PIECE	DESCRIPTION	DRAWING	USED ON
2	UM341755	Frame	D66001-1C	All
3	UJ78467	Operating Arm Support	12770-148	All
4	UM321855	Latch Rod	8098-1560	All
5	UM321856	Latch Button	8109-533	All
6	UJ480006	Hex. Nut, No. 4-40 steel (Tin Pl.)		All
7	UM321728	Latch	8236-72	All
8	UM301356	Dowel Pin	8097-1049	All
9	UM321861	Spring	7770-716	All
10	UN341777	Armature Complete	8157-554	All
11	UM341776	. Armature	8157-553	10
12	UM20586	. Bushing	8097-467	10
13	UJ49811	. Rivet	10301-1	10
17	UM341844	Armature Bracket	8303-156	All
18	UM341808	Pivot	8378-410	All
19	UN341774	Contact Block Complete, 6N-6R low voltage contacts	D66001-6	All
20	UJ78469	. Contact Block	12770-149	19
21	UN322222	. Front Contact Spring (Silver Imp. Carbon)	8385-2988	19
22	UN322232	. Heel Contact Spring (Silver)	8385-2990	19
23	UN341576	. Back Contact Spring (Silver Imp. Carbon)	8385-3024	19
24	UJ78470	. Contact Clamp	12770-150	19
25	UM322455	. Wedge	12770-151	19
26	UJ522092	. Screw, No. 6-32 x 7/8" fil. head steel (Tin Pl.)		19
30	UJ522104	Screw, No. 8-32 x 7/8" fil. head steel		All
31	UJ78488	Operating Arm	D66001-10	All
32	UM321894-001	Indicator	12748-147	All
33	UM275388	Bolt Lock	8486-432	All
34	UJ463076	Screw, No. 6-32 x 7/16" hex. head steel (Tin Pl.)		All
35	UM341624	Permanent Magnet Assembly (magnetized)	12748-189	All
36	UM341845	Strap	12748-191	All
37	UM341635	Screw	8098-1592	All

REF.	PIECE	DESCRIPTION	DRAWING	USED ON
38	UM321821	Handle	8311-181	All
39	UJ47681	Lock Washer, No. 8 steel (Tin Pl.)		All
40	UJ52255	Screw, No. 8-32 x 3/8" fil. head steel (Tin Pl.)		All
41	UJ50731	Screw, No. 8-32 x 5/16" hex. socket cup point (Tin Pl.)		All
42	UJ522139	Screw, No. 6-32 x 1/2" fil. head		All
43	UM333975	Coil, 240-ohms	D66001-3	A
43a	UM321647	Coil, 400-ohms	D66001-3	Aa
44	UM321746	Coil Lock (Not Shown)	8735-1205	All
45	UJ525024	Screw, No. 4-40 x 3/16" round head steel (Tin Pl.)		All
46	UJ630901	Name Plate, Orders should specify piece number of relay for which Name Plate is desired	8225-1618	All
47	UJ487090	Indexing Pin		All
48	UJ47081	Gasket	8078-1933	All
49	UM321923	Cover	D66001-2	All
50	UJ525030	Screw, No. 6-32 x 5/16" round head steel (Tin Pl.)		All
51	UM347631	Washer	8078-1896	All
52	UM321747	Screw	8098-1558	All
53	UA43013	Seal Wire . Orders should specify length desired		All
54	UJ79351	Seal	8988-33	All
55	UJ78460	Tag Holder	12770-147	All
56	UJ52665	Screw, No. 4 x 1/4" round head steel sheet metal (Tin Pl.)		All
57	UM322078-0701	Indexing Plate for PP-151 relay with 240-ohm coil	D66001-8	A
57a	UM322078-0702	Indexing Plate for PP-151 relay with 400-ohm coil	D66001-8	Aa
58	UJ52246	Screw, No. 6-32 x 1-1/4" fil. head steel (Tin Pl.) for attaching Indexing Plate to Mounting Base (Not Shown)		All
59	UJ75828	Tag	B35002-14	All
60	UM321799	Core	8101-445	All
61	UJ50016	Cap Screw, 1/4" - 20 x 3/4" hex. head steel (Tin Pl.)		All

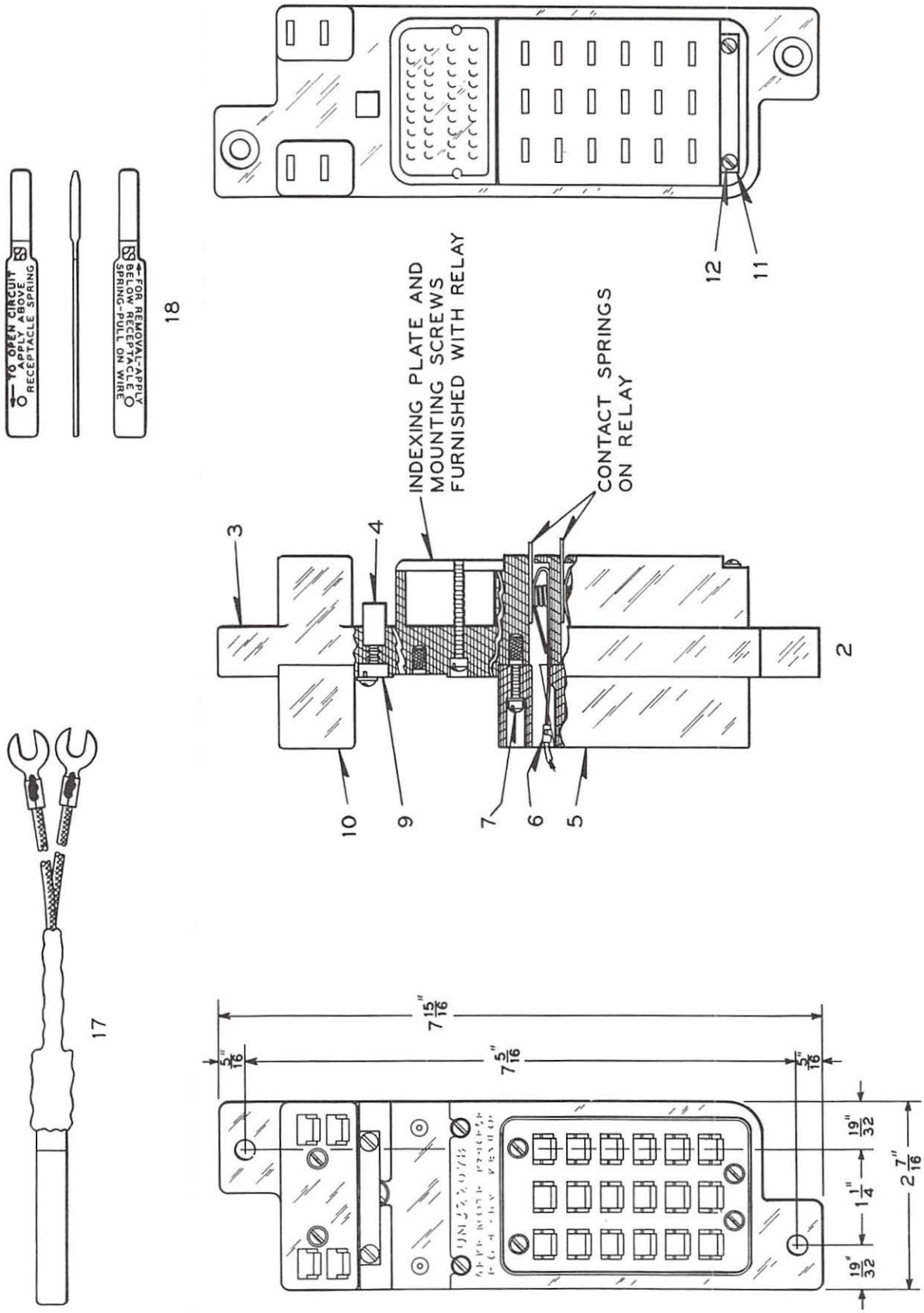

MOUNTING BASE for Style PP-151 Relay

STYLE PP-151 MAGNETIC STICK D.C. RELAY

Detail Parts

MOUNTING BASE

Indented item descriptions indicate that the references in the "Used On" column refer to this Plate, E3-1000.2. All other references refer to the General Plate E3-1000.

Order by Plate, Reference, Piece and Abbreviated Description

REF.	PIECE	DESCRIPTION	DRAWING	USED ON
2	UN341785	Mounting Base Complete	D66002-1	All
3	UJ78455	. Mounting Base Only	D66003-1	2
4	UM321745	. Strike	8236-71	2
5	UJ78498	. Clamping Plate	B35004-1C	2
6	UN333845	. Contact Receptacle Complete (solderless type)	8385-3012	2
7	UJ522090	. Screw, No. 6-32 x 5/8" fil. head steel (Tin Pl.)		2
9	UM267499	. Nut	8109-383	2
10	UJ776283	. Clamping Block	B35004-2	2
11	UJ75828	. Tag	B35002-14	2
12	UJ525024	. Screw, No. 4-40 x 3/16" round head (Tin Pl.)		2
13	UJ525033	. Screw, 1/4" - 20 x 1-1/4" round head steel (Tin Pl.) (Not Shown)		2
14	UJ47711	. Washer (Not Shown)	8078-121	2
15	UJ47775	. Lock Washer, 1/4" steel (Tin Pl.) (Not Shown)		2
16	UJ48002	. Hex. Nut, 1/4" - 20 steel (Tin Pl.) (Not Shown)		2
		Note: Refs. 13 to 16 inclusive are for attaching mounting base to rack		
17	UN322965	Meter Test Plug	A2586-147	
18	UJ77931	Insulated Test Plug. Used for opening any coil or contact circuit and for removing receptacle springs	A2586-177	

SHELF MOUNTING BRACKETS FOR STYLE PN-150 AND PN-250 RELAYS

Shelf mounting brackets for individually mounting Style PN-150 and PN-250 relays in instrument cases have been found desirable for saving shelf space when modifying an existing signal system. Many of the plug-in relays, such as the PT-250 Time Element Relay, have improved characteristics which justify their use in installations that are predominantly shelf type relays.

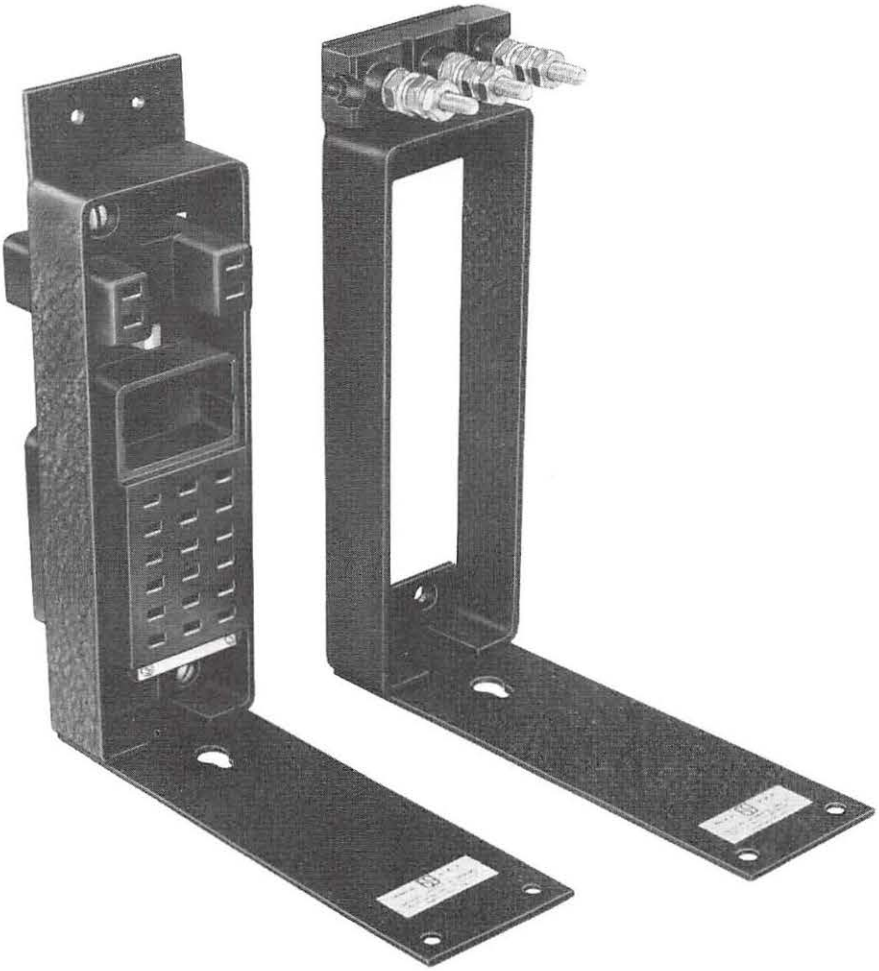

Height 9-11/16", Width 2-13/16, Depth 8"

SINGLE WIDTH SHELF MOUNTING BRACKETS

Two sizes of brackets are available, one for a single Style PN-150 relay, and the second of double size width, suitable for a single Style PN-250 or two Style PN-150 relays. Brackets can be purchased with or without test blocks. The test block for the single bracket has 3 posts and for the double bracket 6 posts.

CONSTRUCTION

The bracket is a welded assembly and uses weld nuts where the mounting base screws enter the bracket. Black wrinkle finish paint is used.

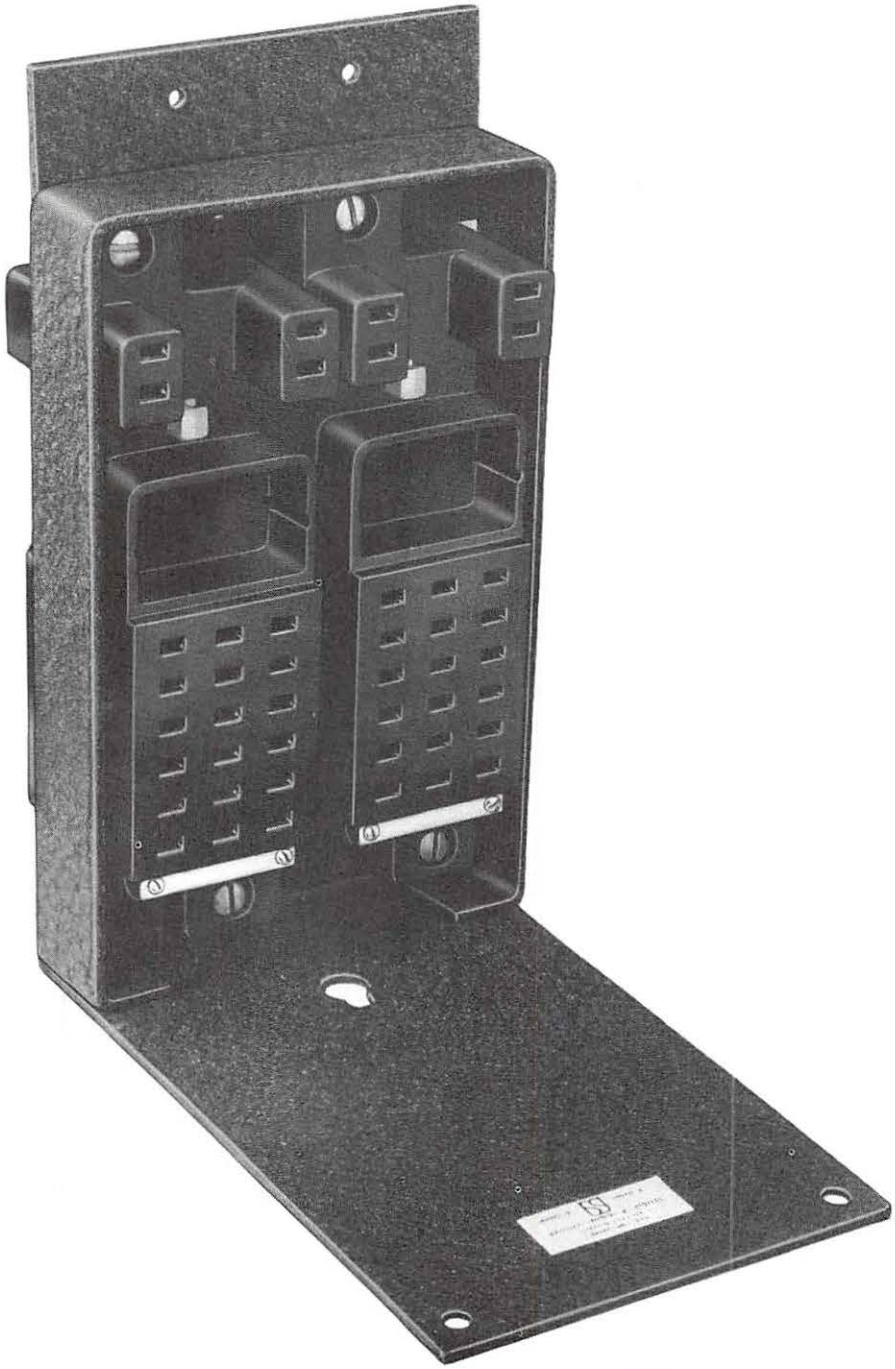

Height 9-11/16", Width 5-5/16", Depth 8"

DOUBLE WIDTH SHELF MOUNTING BRACKET

Holes in the base permit the bracket to be fastened to the shelf by means of screws. The two screws at the front of the base can be removed with the relay plugged-in, while the "button hole" design of the rear hole permits removing the bracket without loosening the rear screw.

FEATURES

Simple and functional design.

Test blocks permit relay coil circuit to be opened from the front of the relay.

Assembly can be turned around easily for access to the connection at the rear.

Nylon cable clamp holds wires in position without stress on the receptacle springs.

Saves shelf space when modifying existing signal systems.

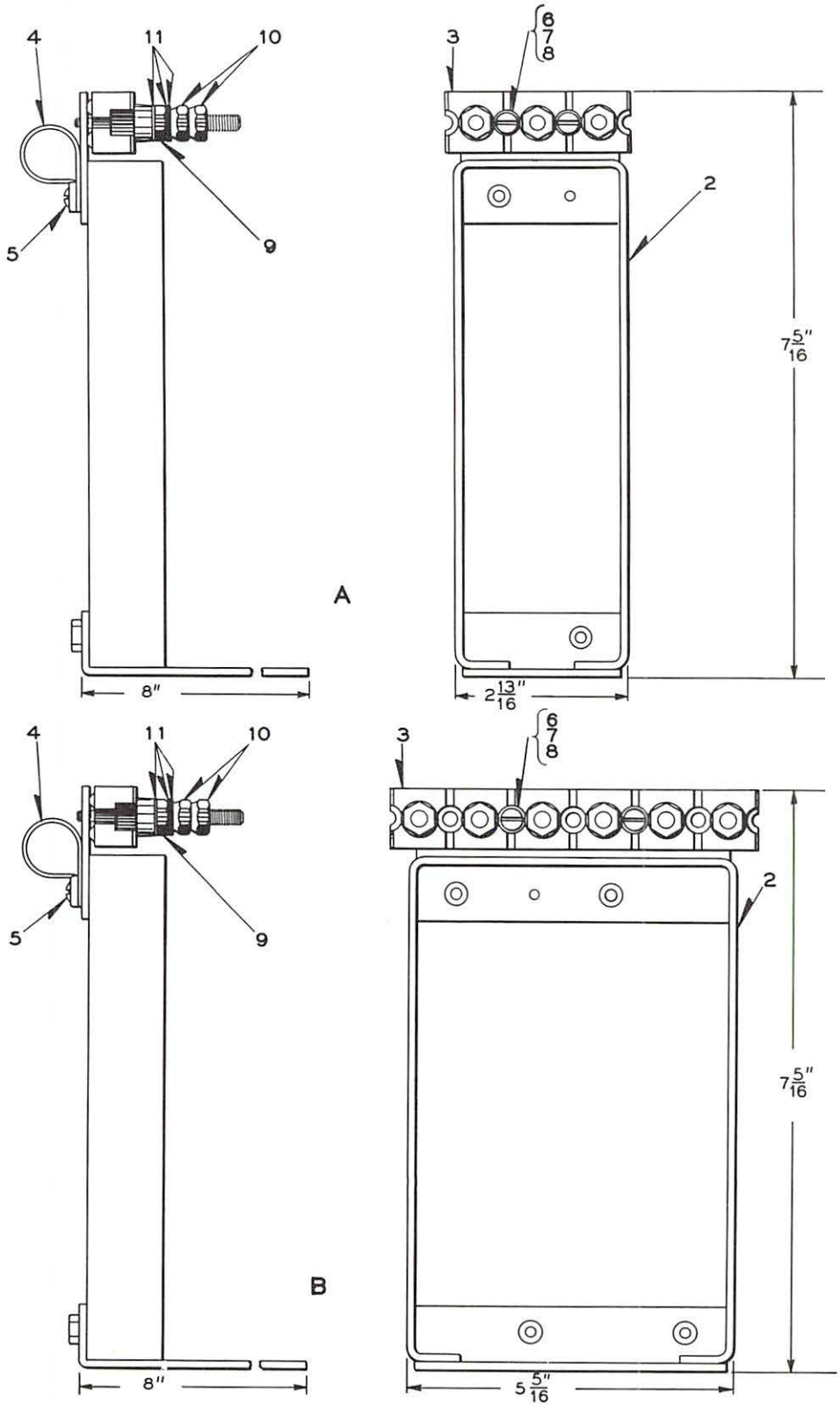

SHELF MOUNTING BRACKETS FOR STYLE PN-150 AND PN-250 RELAYS

SHELF MOUNTING BRACKETS FOR STYLE PN-150 AND PN-250 RELAYS

Assemblies and Detail Parts

Indented item descriptions indicate that the references in the "Used On" column refer to this Plate E3-9500.

Order by Plate, Reference, Piece and Abbreviated Description

REF.	PIECE	DESCRIPTION	DRAWING	USED ON
A	UN373826	Shelf Mounting Bracket with 3-Way Test Block.	C50051-1	Single PN-150 Relay
Aa	UN373904	Shelf Mounting Bracket without Test Block.	C50051-1	Single PN-150 Relay
B	UN373828	Shelf Mounting Bracket with 6-Way Test Block.	C50051-2	One PN-250 or two PN-150 Relays
Ba	UN373914	Shelf Mounting Bracket without Test Block	C50051-2	One PN-250 or two PN-150 Relays
2	UR373829	. Bracket	C50051-3	A, Aa
2a	UR373830	. Bracket	C50051-4	B, Ba
3	UM109154	. 3-Way Test Block	9968-1255	A
3a	UM107203	. 6-Way Test Block	9968-1255	B
4	UJ700639	. Cable Clamp.		A thru Ba
5	UJ52564	. Screw, No. 10-32 x 3/8" rd. hd. steel		A thru Ba
6	UJ52300	. Screw, No. 10-32 x 5/8" fil. hd. steel		A, B
7	UJ47733	. Lock Washer, No. 10 steel		A, B
8	UM73129	. Washer	7826-180	A, B
9	UM127260	. Nut	8109-194	A, B
10	UM29101	. Nut	8109-193	A, B
11	UJ47818	. Washer	7828-139	A, B

STYLE RD D.C. POLAR RELAY

The style RD designation includes a group of direct current, two position, 8 point, high speed polar type relays. The fundamental design, physical dimensions and general appearance of this entire group are identical, but various coil resistances and calibration values are furnished to suit specific applications.

RD relays are individually housed with all operating parts fully enclosed and sealed. All contacts are visible through the transparent front cover.

RD relays have two separate coil circuits which may be used independently or in combination, to suit requirements.

RD relays are plug connected for quick and easy replacement. Coded key slots are provided in the relay case to mesh with pins in the mounting base, thereby preventing insertion of a given relay into an incorrect mounting base. The pin plate on each mounting base contains five pins in various combinations. Each separate type of RD relay has an individual combination assignment. Slots are milled in the base of each relay to match this assignment. The numbers which remain on the base of the relay after the slots have been cut identify the code combination for that relay.

Two different types of relay operation are provided, magnetic stick and biased.

The stick type relay requires a polarity reversal to actuate the armature to operate the relay. The relay armature will remain in its last operated position until a DC voltage of polarity opposite to that which was last applied is used to energize the relay.

The armature of a biased type relay picks-up (moves clockwise) only when a DC voltage of a given polarity is applied. When a biased relay is either de-energized, or energized by a voltage opposite the given polarity, the armature will remain in the counter-clockwise (de-energized) position or return to this position if picked up.

Height 3-1/2", Width 3-3/8", Depth 3-5/16"

STYLE RD D.C. POLAR RELAY

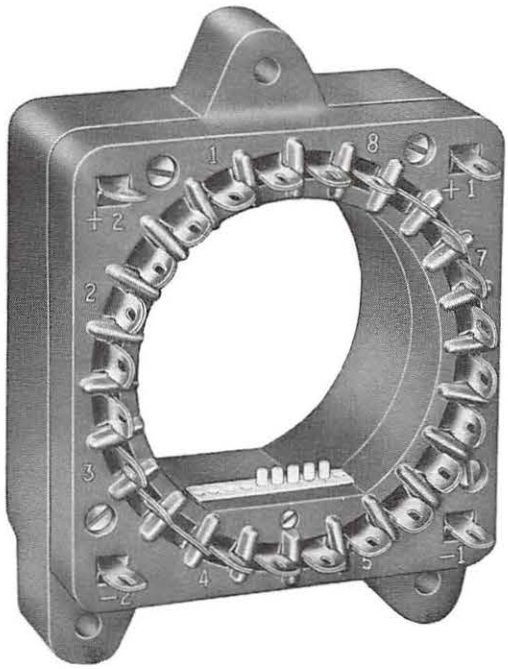

Height 4-5/8", Width 3-3/8", Depth 2-1/16"

MOUNTING BASE, for Style RD D.C. Polar Relay

STYLE RD D.C. POLAR RELAY

Refer to Plate E12-1000.1 for relay details and Plate E12-1000.2 for mounting base details.

* Minimum voltage at the relay to insure reliable operation for application in which timing is not involved. For a great many applications, short pulses of much higher voltage are used to provide faster operation. The average power in the coils for longer than a one minute period should not exceed 2 watts if one winding is energized, or 3.5 watts if both windings are energized; continuous power should not exceed 1 watt per coil.

NOTE: Relay references do not include Mounting Bases.

Order by Plate, Reference, Piece and Abbreviated Description

STYLE RD D.C. POLAR RELAY (STICK TYPE)

REF	PIECE	CONTACTS	COIL RESISTANCE	* MINIMUM BATTERY VOLTAGE Coils in Series	DRAWING
A	UN308000	8N-8R	30-30	4.5	C17021-2
Aa	UN308003	8N-8R	286-286	19.0	C17021-2

STYLE RD D.C. POLAR RELAY (BIASED TYPE)

REF	PIECE	CONTACTS	COIL RESISTANCE	* MINIMUM BATTERY VOLTAGE Coils in Series	DRAWING
B	UN308001	8F-4B	50-50	6.5	C17021-2
Ba	UN308002	8F-4B	1730-1730	35.0	C17021-2
Bb	UN315538	8F-4B	100-100	9.0	C17021-2
Bc	UN318614	8F-4B	30-30	5.0	C17021-2

MOUNTING BASE, for Style RD D.C. Polar Relay

REF	PIECE	FOR RELAY	DRAWING	USED ON
C	UN308766	Stick 8N-8R	C16655-7	A
Ca	UN308767	Biased 8F-4B	C16655-7	B
Cb	UN308768	Biased 8F-4B	C16655-7	Ba
Cc	UN308769	Stick 8F-4B	C16655-7	Aa
Cd	UN315569	Biased 8F-4B	C16655-7	Bb
Ce	UN318618	Biased 8F-4B	C16655-7	Bc

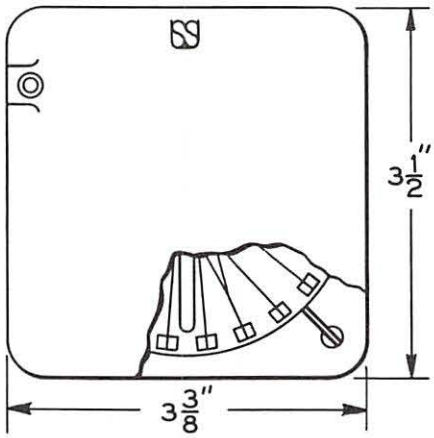

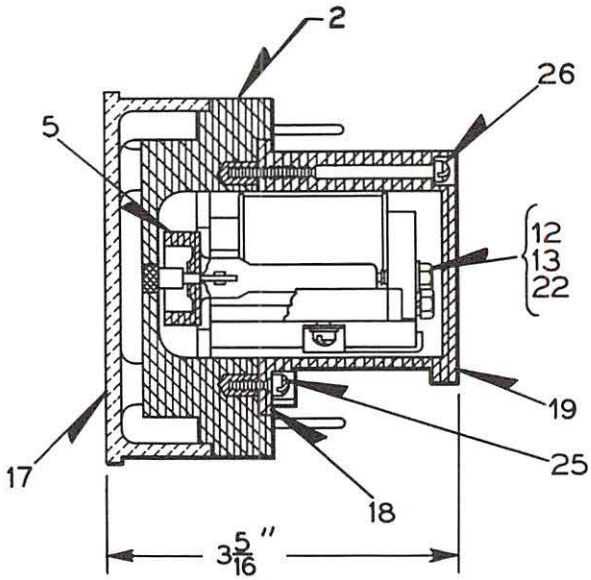

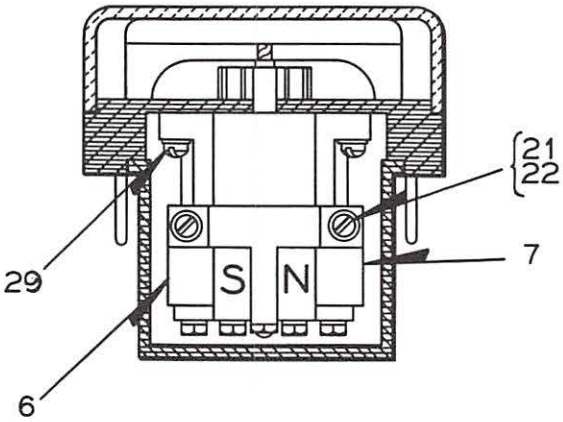

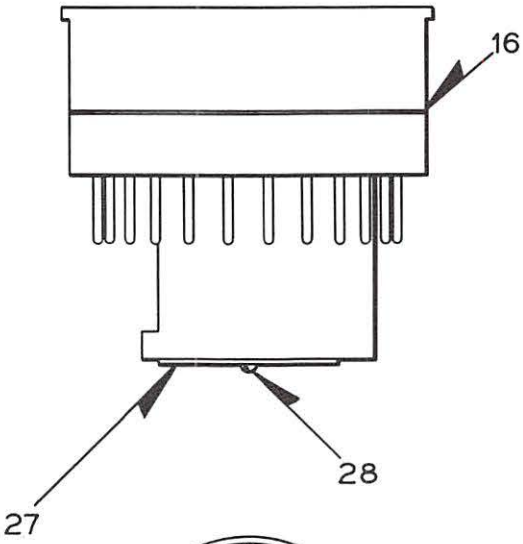

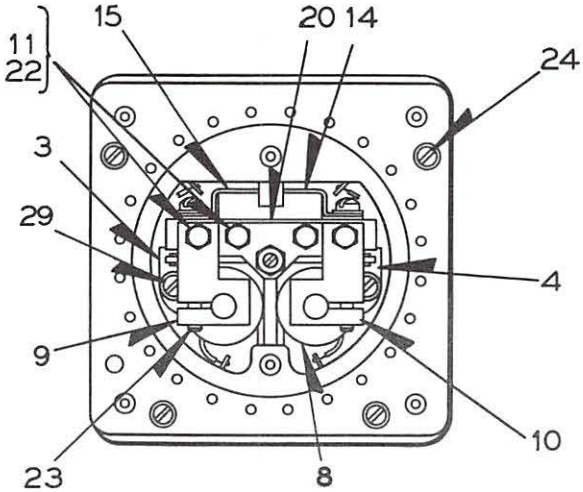

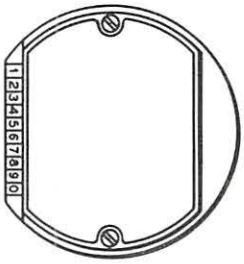

STYLE RD D.C. POLAR RELAY

STYLE RD D.C. POLAR RELAY

Detail Parts

Indented item descriptions indicate that the references in the "Used On" column refer to this Plate, E12-1000.1. All other references refer to the General Plate E12-1000.

Order by Plate, Reference, Piece and Abbreviated Description

REF.	PIECE	DESCRIPTION	DRAWING	USED ON
2	UN307881	Contact Spring Assembly Complete	C17022-4	A, Aa
2a	UN310387	Contact Spring Assembly Complete	C17022-4	B,Ba,Bb,Bc
3	UM307878	Core, L.H.	8101-436	A, Aa
3a	UM317480	Core, L.H.	8101-436	B,Ba,Bb,Bc
4	UM307879	Core, R.H.	8101-436	All
5	UN318250	Rotor Complete, Stick Relay	12770-139	A, Aa
5a	UN318250-001	Rotor Complete, Biased Relay	12770-139	B,Ba,Bb,Bc
6	UM307874	Pole Piece, L.H.	8250-148	All
7	UM312618	Pole Piece, R.H.	8250-148	A, Aa
7a	UM317479	Pole Piece, R.H.	8250-148	B,Ba,Bb,Bc
8	UN314910	Coil, 30-ohms	8133-721	A, Bc
8a	UN316733	Coil, 286-ohms	8133-721	Aa
8b	UN314911	Coil, 50-ohms	8133-721	B
8c	UN314912	Coil, 1730-ohms	8133-721	Ba
8d	UN315570	Coil, 100-ohms	8133-721	Bb
9	UM307863	Back Strap, L.H.	8162-306	All
10	UM312612	Back Strap, R.H.	8162-306	All
11	UM162755	Screw	8098-165	All
12	UM307867	Pivot Screw	8378-397	All
13	UM30456	Nut	8109-212	All
14	UM307862-0001	Magnet, Permanent	12586-32	All
15	UM307871	Bracket	10914-2789	All
16	UJ47320	Gasket	8078-1902	All
17	UJ78494	Cover, Front	C17022-8	All
18	UJ47321	Gasket	8078-1901	All
19	UM307994	Cover, Rear	C17022-5	A
19a	UM316839	Cover, Rear	C17022-5	Aa
19b	UM310385	Cover, Rear	C17022-5	B
19c	UM310386	Cover, Rear	C17022-5	Ba
19d	UM315595	Cover, Rear	C17022-5	Bb

REF.	PIECE	DESCRIPTION	DRAWING	USED ON
19e	UM318619	Cover, Rear	C17022-5	Bc
20	UM307859	Support, Rear Bearing	12538-384	All
21	UJ51384	Machine Screw, No. 6-40 x 7/16" fil. head brass (N. Pl.)		All
22	UJ47708	Lock Washer, No. 6 phosphor bronze (N. Pl.)		All
23	UJ50015	Cap Screw, No. 4-40 x 3/8" phosphor bronze (N. Pl.).		All
24	UJ52245	Machine Screw, No. 6-32 x 3/4" fil. head steel (T. Pl.)		All
25	UJ52249	Machine Screw, No. 6-40 x 5/16" fil. head steel (T. Pl.)		All
26	UJ52262	Machine Screw, No. 6-40 x 1-7/8" fil. head steel (T. Pl.)		All
27	UJ630590	Nameplate (Orders should specify piece number of relay for which desired)	8225-1367	A, Aa
27a	UJ630591	Nameplate (Orders should specify piece number of relay for which desired)	8225-1368	B,Ba,Bb,Bc
28	UJ525136	Screw, No. 2-56 x 3/16" self tapping		All
29	UJ51462	Screw, No. 6-40 x 7/16" fil. head brass	8098-1580	All

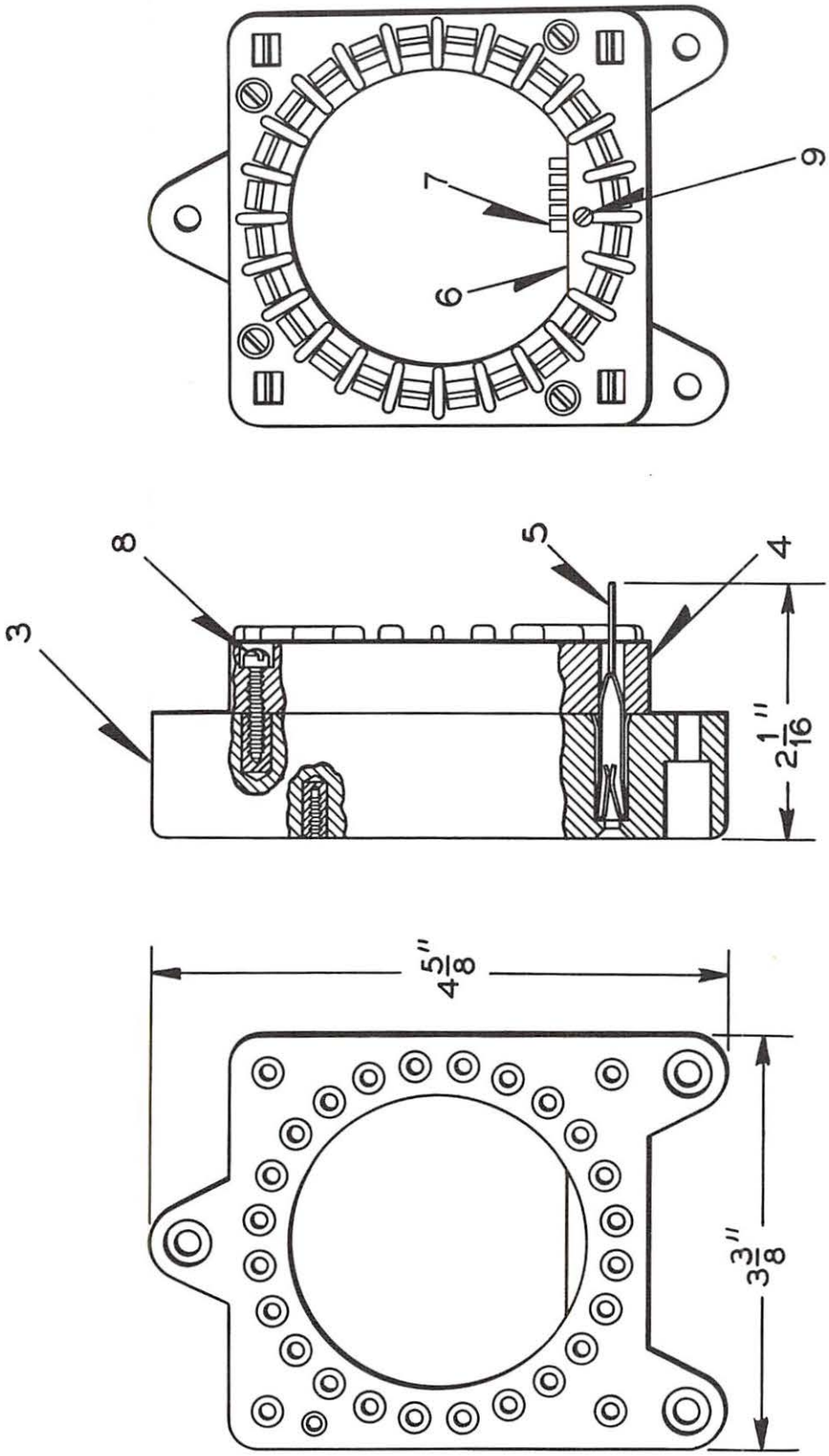

2

MOUNTING BASE for Style RD D.C. Polar Relay

STYLE RD D.C. POLAR RELAY

Detail Parts of Mounting Base

Indented item descriptions indicate that the references in the "Used On" column refer to this Plate, E12-1000.2. All other descriptions refer to the General Plate E12-1000.

Order by Plate, Reference, Piece and Abbreviated Description

REF.	PIECE	DESCRIPTION	DRAWING	USED ON
2	UN308766	Mounting Base Complete	C16655-7	A
2a	UN308769	Mounting Base Complete	C16655-7	Aa
2b	UN308767	Mounting Base Complete	C16655-7	B
2c	UN308768	Mounting Base Complete	C16655-7	Ba
2d	UN315569	Mounting Base Complete	C16655-7	Bb
2e	UN318618	Mounting Base Complete	C16655-7	Bc
3	UM308761	. Body	C16866-9	All
4	UM308763	. Back Plate	C16866-10	All
5	UN308765	. Contact Receptacle Complete	8385-2966	All
6	UM307999	. Relay Guide	11893-1196	All
7	UM307998	. Guide Stud	8114-1208	All
8	UJ51407	. Machine Screw, No. 6-40 x 9/16" fil. head brass (N. Pl.)		All
9	UJ51368	. Machine Screw, No. 3-56 x 1/2" fil. head brass (N. Pl.)		All
10	UJ52413	Machine Screw, No. 6-40 x 1-3/4" fil. head steel for attaching Mounting Base to support (Not shown)		All

STYLE U-5 SWITCH CIRCUIT CONTROLLER

The Style U-5 Switch Circuit Controller is available in either four or six-way sizes for two-position, three-position and polarized applications.

FEATURES

Meets all applicable AAR requirements.

An assessibly located micrometer screw on each operating cam provides quick individual contact adjustment permitting a wide variety of applications.

Contacts are positively driven in both directions. Lost motion is taken up by a coil spring, (Reference 73, Plate J1-1.1).

Quick response of contacts to point movement assures complete contact spring operation well within the limits of the applicable AAR specification.

The large, 1-1/2" diameter shaft provides:

Large bearing area, reducing bushing wear.

Large surface area to engage the micrometer adjusting screw, preventing wear and the resultant loss in sensitivity.

Equipped with bronze shaft bearings with pressure grease fittings.

All parts are easily accessible for inspection or removal.

Rugged construction of entire mechanism insures positive operation, long life and ease of maintenance.

INTERCHANGEABILITY

A two-position controller may be used without change of parts for polarized applications by proper cam and circuit adjustments.

A two-position controller may be used as a three-position controller for two circuits by using two cam spaces for each three-position circuit and the proper cam adjustments.

A three-position controller for four circuits is obtained by substituting combined three-position cams, References 30 and 31, Plate J1-1.1, in place of a two-position cam, Reference 29, and the substitution of cam shaft Reference 28b for Reference 28.

WEIGHT INFORMATION

Four-way controller, including crank, approximately 68 pounds.

Six-way controller, including crank, approximately 87 pounds.

OPERATING RODS

Operating rods and switch point lugs for use with switch circuit controllers are shown on Plate J1-100.

STYLE U-5 SWITCH CIRCUIT CONTROLLER

STYLE U-5 SWITCH CIRCUIT CONTROLLERS
2 AND 3 POSITION, 4 AND 6 WAY

Refer to Plate J1-1.1 for 4 and 6 Way Circuit Controller Details

Order by Plate, Reference, Piece and Abbreviated Description

Style U-5 Four Way (4F-4B dependent contacts) Switch Circuit Controller with two Wire Guide Plates - one blank and one with 1-1/2" tapped hole. For Standard Applications. Dwg. F80065-1

REF.	PIECE	CAM	RETURN SPRING	CRANK			
				3/4" Offset		2-13/32" Offset	
				Insulated Ball Stud	Non-Ins. Ball Stud	Insulated Ball Stud	Non-Ins. Ball Stud
A	UN184136	4-2 Pos.	Without	With			
Aa	UN253925	4-2 Pos.	Without		With		
Ab	UN190700	4-2 Pos.	Without			With	
Ac	UN244167	4-2 Pos.	Without				With
Ad ✓	UN218085	4-2 Pos.	With	With			
Ae	UN199187	4-2 Pos.	With		With		
Af ✓	UN229482	4-2 Pos.	With			With	
Ag	UN257184	4-2 Pos.	With				With
Ah	UN209313	2-2 Pos. 2-3 Pos.	Without	With			
Aj	UN207228	2-2 Pos. 2-3 Pos.	Without		With		
Ak	UN253786	2-2 Pos. 2-3 Pos.	Without			With	
Am	UN298960	2-2 Pos. 2-3 Pos.	Without				With
An	UN262424	2-2 Pos. 2-3 Pos.	With	With			
Ap	UN236956	2-2 Pos. 2-3 Pos.	With		With		
Aq	UN191911	2-2 Pos. 2-3 Pos.	With			With	
Ar	UN194433	2-2 Pos. 2-3 Pos.	With				With
As	UN184035	4-3 Pos.	Without	With			
At	UN207497	4-3 Pos.	Without		With		
Au	UN190702	4-3 Pos.	Without			With	
Av	UN196648	4-3 Pos.	Without				With
Aw	UN323769	4-3 Pos.	With	With			
Ax	UN186829	4-3 Pos.	With		With		
Ay	UN191898	4-3 Pos.	With			With	
Az	UN223613	4-3 Pos.	With				With

Style U-5 Four Way (4F-4B dependent contacts) Switch Circuit Controller with two Wire Guide Plates - one with 2" tapped hole and one with 1-1/2" tapped hole. For Classification Yards. Dwg. F80065-1

REF.	PIECE	CAM	RETURN SPRING	CRANK			
				3/4" Offset		2-13/32" Offset	
				Insulated Ball Stud	Non-Ins. Ball Stud	Insulated Ball Stud	Non-Ins. Ball Stud
B	UN371946	3-3 Pos. 1-2 Pos.	Without	With			

Style U-5 Six Way (6F-6B dependent contacts) Switch Circuit Controller with two Wire Guide Plates - one blank and one with 1-1/2" tapped hole. For Standard Applications. Dwg. F80065-2

REF.	PIECE	CAM	RETURN SPRING	CRANK			
				3/4" Offset		2-13/32" Offset	
				Insulated Ball Stud	Non-Ins. Ball Stud	Insulated Ball Stud	Non-Ins. Ball Stud
C	UN184174	6-2 Pos.	Without	With			
Ca	UN231235	6-2 Pos.	Without		With		
Cb	UN196130	6-2 Pos.	With		With		
Cc	UN342206	6-2 Pos.	With			With	
Cd	UN223614	6-2 Pos.	With				With
Ce	UN330961	2-2 Pos. 4-3 Pos.	Without			With	
Cf	UN220884	6-3 Pos.	Without	With			

Style U-5 Six Way (6F-6B dependent contacts) Switch Circuit Controller with two Wire Guide Plates - one with 2" tapped hole and one with 1-1/2" tapped hole. For Classification Yards. Dwg. F80065-2

REF.	PIECE	CAM	RETURN SPRING	CRANK			
				3/4" Offset		2-13/32" Offset	
				Insulated Ball Stud	Non-Ins. Ball Stud	Insulated Ball Stud	Non-Ins. Ball Stud
D	UN338576	3-3 Pos. 3-2 Pos.	Without	With			

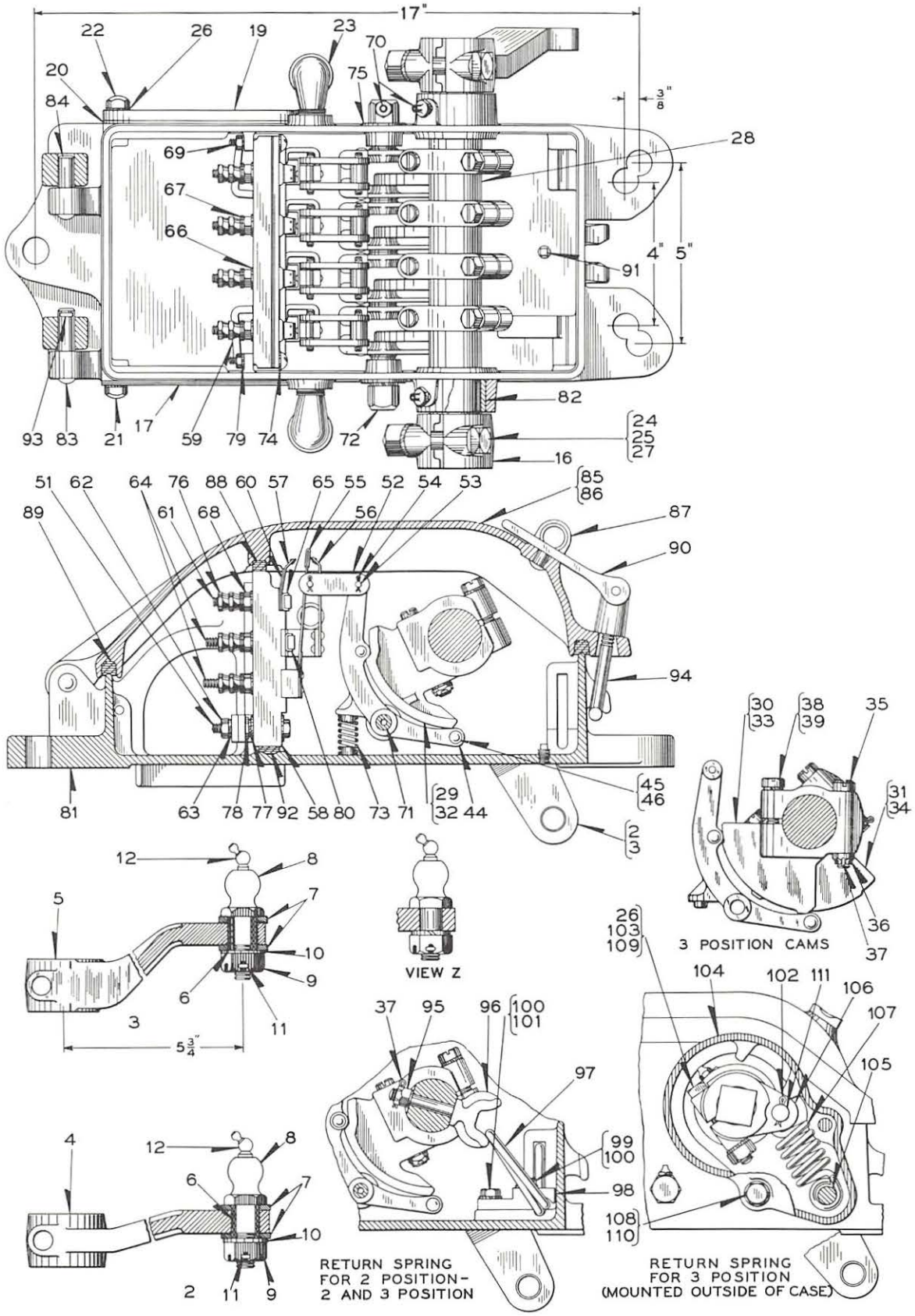

STYLE U-5 SWITCH CIRCUIT CONTROLLER (4 WAY)

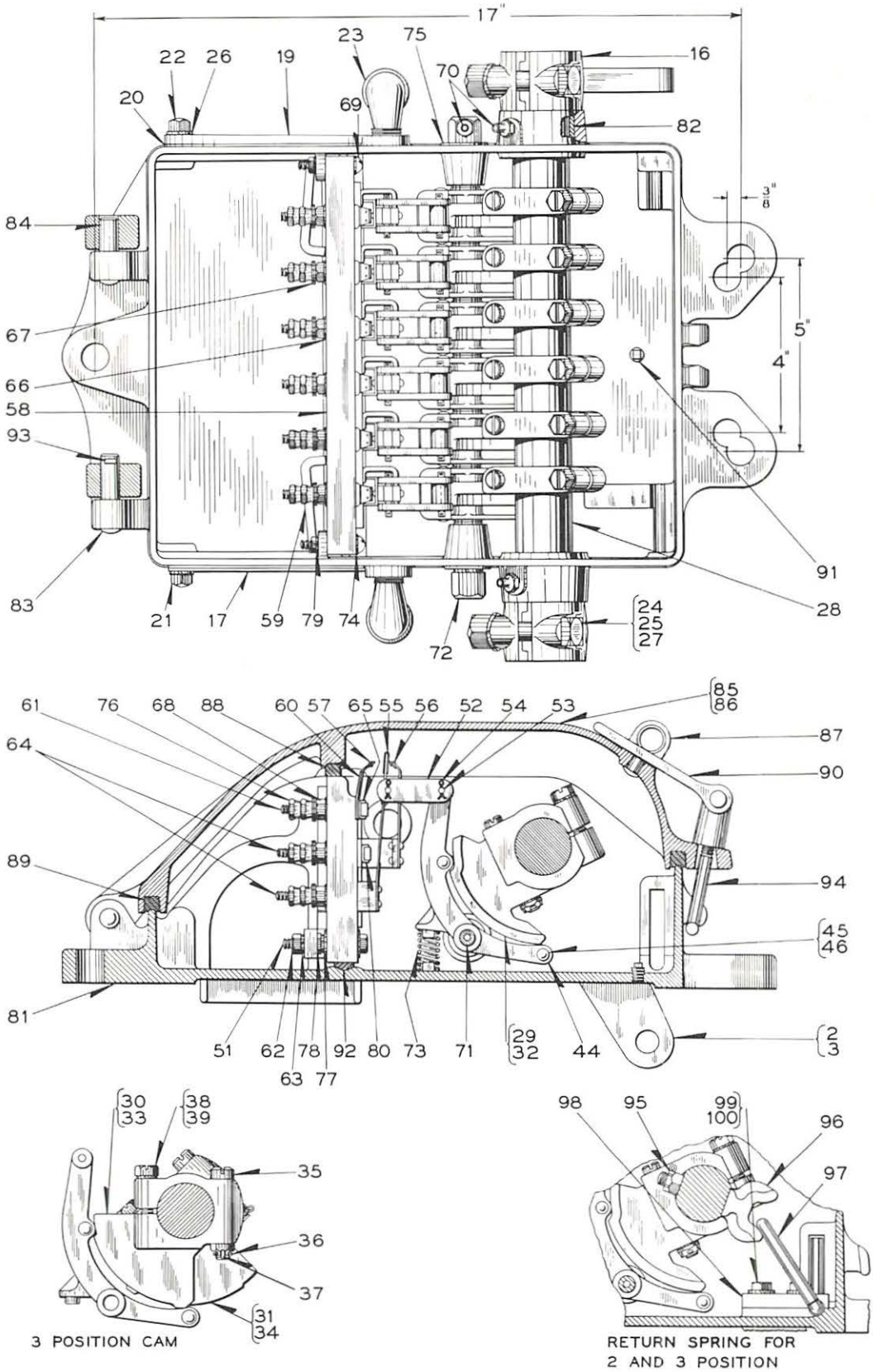

STYLE U-5 SWITCH CIRCUIT CONTROLLER (6 WAY)

STYLE U-5 SWITCH CIRCUIT CONTROLLER

Detail Parts

Indented item descriptions indicate that the references in the "Used On" column refer to this Plate, J1-1.1. All other references refer to the General Plate J1-1.

Order by Plate, Reference, Piece and Abbreviated Description

REF.	PIECE	DESCRIPTION	DRAWING	USED ON
2	UN183491	Operating Crank Complete, 3/4" offset, with Insulated ball stud	8192-386	A, Ad, Ah, An, As, Aw, B, C, Cf
2a	UN253930	Operating Crank Complete, 3/4" offset, with Non-Insulated ball stud per View Z	8192-386	Aa, Ae, Aj, Ap, At, Ax, Ca, Cb
3	UN178530	Operating Crank Complete, 2-13/32" offset, with Insulated ball stud	8192-378	Ab, Af, Ak, Aq, Au, Ay, Cc, Ce
3a	UN244166	Operating Crank Complete, 2-13/32" offset, with Non-Insulated ball stud per View Z	8192-378	Ac, Ag, Am, Ar, Av, Az, Cd
4	UM183490	. Crank only (13/16" dia. drilled hole)	8192-386	2
4a	UM186840	. Crank only (5/8" dia. reamed hole)	8192-386	2a
5	UM178529	. Crank only (13/16" dia. drilled hole)	8192-378	3
5a	UM178528	. Crank only (5/8" dia. reamed hole)	8192-378	3a
6	UM113877	. Ins. Bushing	8095-572	2, 3
7	UM61496	. Washer	8078-1092	2, 3
8	UM146866	. Ball Stud	8071-169	2, 2a, 3, 3a
9	UJ48074	. 5/8" Hex. Nut (Slotted)		2, 2a, 3, 3a
10	UM41375	. Washer	7826-98	2, 2a, 3, 3a
11	UJ48622	. Cotter, 1/8" x 1-1/4"		2, 2a, 3, 3a
12	UJ39141	. Lubricating Fitting, 3/16", 67-1/2° drive		2, 2a, 3, 3a
16	UM178314	Clamp	12565-17	All
17	UM51418	Wire Guide Plate (Blank)	C8042-7	A to Az inc. C to Cf inc.
19	UM147882	Wire Guide Plate with 1-1/2" tapped hole	C8042-27	All
19a	UM172406	Wire Guide Plate with 2" tapped hole	C8042-32	B, D
20	UM378675	Gasket	B35051-13	All
21	UJ50049	Cap Screw, 3/8" x 1/2" hex. head steel		A to Az inc. C to Cf inc.

REF.	PIECE	DESCRIPTION	DRAWING	USED ON
22	UJ50051	Cap Screw, 3/8" x 3/4" hex. head steel		All
22a	UJ50053	Cap Screw, 3/8" x 1" hex. head steel		B, D
23	UN70109	Ventilator Complete	7318-57	All
24	UJ46664	Bolt, 1/2" x 3" Sq. Hd. S. (Cad. Pl.)		All
25	UJ48013	Hex Nut, 1/2" (Cad. Pl.)		All
26	UJ47779	Lock Washer, 3/8" (Cad. Pl.)		All
27	UJ47769	Lock Washer, 1/2" S. (Cad. Pl.)		All
28	UM178531	Cam Shaft for 4-way 2 position controller	C8042-38	A to Ag inc.
28a	UM194434	Cam Shaft for 4-way combination 2 and 3 position controller	C8042-48	Ah to Ar inc.
28b	UM183534	Cam Shaft for 4-way 3 position controller	C8042-41	As to B inc.
28c	UM184181	Cam Shaft, for 6-way 2 position controller	C8042-38	C to Cd inc.
28d	UM206676	Cam Shaft, for 6-way 3 position or combination 2 and 3 position controller	C8042-39	Ce, Cf, D
29	UN208349	Cam Complete (Two-Position)	C8042-39	A to Ar inc. B to Ce inc. D
30	UN213511	L. H. Cam Complete (Three-Position)	C8042-41	Ah to B inc. Ce, Cf, D
31	UN213512	R. H. Cam Complete (Three-Position)	C8042-41	Ah to B inc. Ce, Cf, D
32	UM196244	. Cam Only (Two-Position)	C8042-39	29
33	UM197930	. Cam Only (L. H. Three-Position)	C8042-41	30
34	UM197931	. Cam Only (R. H. Three-Position)	C8042-41	31
35	UM103637	. Adjusting Screw	8190-412	29, 30, 31
36	UJ48096	. Nut	8265-327	29, 30, 31
37	UJ48610	. Cotter Pin, 3/32" x 5/8" steel (Tin. Pl.)		29, 30, 31
38	UM182742	. Screw	8190-329	29, 30, 31
39	UJ47779	. Lock Washer, 3/8" plain steel (Cad. Pl.)		29, 30, 31
44	UN181164	Operating Arm Complete	C8042-39	All
44a	UM180171	. Operating Arm Only	C8042-39	44
45	UM181173	. Roller	8072-1051	44
46	UM38451	. Pin	10202-1	44
51	UJ46508	Tap Bolt, 1/4" - 20 x 2" Hex. Hd. S. (Tin. Pl.)		All
52	UJ77665	Ins. Link	8750-933	All
53	UM51765	Pin	8097-548	All
54	UJ48600	Cotter, 1/16" x 3/8" (N. P.)		All
55	UN70117	Contact Spring Complete	8385-1434	All
56	UN70118	Contact Spring Complete	8385-1435	All
57	UN70119	Contact Spring Complete	8385-1113	All

REF.	PIECE	DESCRIPTION	DRAWING	USED ON
58	UJ77614	Terminal Board	9968-245	A to B inc.
58a	UJ77624	Terminal Board	9968-722	C to D inc.
59	UM178386	Clamp	10914-449	A to B inc.
59a	UM307212	Clamp	10914-2781	C to D inc.
60	UM120158	Reinforcing Spring	8735-575	All
61	UM130593	Binding Post	8094-1192	All
62	UJ48002	Hex. Nut, 1/4" steel (Tin. Pl.)		All
63	UJ47766	Lock Washer, 1/4" steel (Tin Pl.)		All
64	UM113978	Binding Post	8094-1192	All
65	UM188259	Lock Washer	8486-310	All
66	UM29104	Washer	7828-138	All
67	UJ47818	Washer	7828-139	All
68	UM31670	Nut	8109-218	All
69	UJ52509	Machine Screw, 1/4" -20 x 1-1/2" round head steel (Tin Pl.)		All
70	UJ39137	Lubricating fitting, 1/8" P.T. straight hydraulic (Ball Check)		All
71	UN181411	Rocker Shaft, 4-way	12501-84	A to B inc.
71a	UN184179	Rocker Shaft, 6-Way	12501-91	C to D inc.
72	UM181409	. Nut	8265-297	71, 71a
73	UM221867	Spring	8124-259	All
74	UM22008	Washer	7826-68	All
75	UM41210	Washer	7829-98	All
76	UM29101	Nut	8109-193	All
77	UM38149	Washer	7826-98	All
78	UJ48003	Hex Jam Nut, 1/4" steel (Tin Pl.)		All
79	UJ47775	Lock Washer, 1/4" steel (Tin Pl.)		All
80	UM268468	Bolt Lock	8486-443	All
81	UN107685	Case for 4-Way 2 Position and 2 and 3 Position Controllers	C8042-49	A to Av inc. B
81a	UN107687	Case (Arranged for return spring on outside of case), for 4-Way 3 Position Controllers	C8042-49	Aw to Az inc.
81b	UN107697	Case for 6-Way Controllers	C8042-51	C to D inc.
82	UJ79562	. Bushing	8350-830	81, 81a, 81b
83	UM167819	. Stud	8115-215	81, 81a, 81b
84	UM167820	. Stud	8115-215	81, 81a, 81b
85	UN107693	Cover Complete (4-Way)	C8042-50	A to B inc.
85a	UN107701	Cover Complete (6-Way)	C8042-52	C to D inc.

REF.	PIECE	DESCRIPTION	DRAWING	USED ON
86	UM107692	. Cover only (4-Way)	C8042-50	85
86a	UN107700	. Cover only (6-Way)	C8042-52	85a
87	UM106161	. Hasp Lug	8191-164	85, 85a
88	UJ47123	. Gasket	8078-1134	85
88a	UM56286	. Gasket	8078-963	85a
89	UA67043	. Gasket (Orders should specify length desired)		85, 85a
90	UN102112	Hasp Complete	8299-146	All
91	UJ32900	Pipe Plug, 1/8"		All
92	UJ47123	Gasket	8078-1134	A to B inc.
92a	UM56286	Gasket	8078-963	C to D inc.
93	UJ48618	Cotter, 1/8" x 3/4" (Tin Pl.)		All
94	UM103344	Tee Bolt	8709-65	All
95	UJ48081	Hex. Nut, 3/8" (Cad. Pl.)		Ad to Ag inc. An to Ar inc. Cb to Cd inc.
96	UM198044	Operating Crank	8117-556	Ad to Ag inc. An to Ar inc. Cb to Cd inc.
97	UM222146	Return Spring	7770-583	Ad to Ag inc. An to Ar inc.
97a	UM198369	Return Spring	7770-533	Cb to Cd inc.
98	UM222144	Return Spring Clamp	9999-1691	Ad to Ag inc. An to Ar inc.
98a	UM198352	Return Spring Clamp	9999-1223	Cb to Cd inc.
99	UJ46420	Tap Bolt, 5/16" x 1-1/4" Hex. Hd. (Cad. Pl.)		Ad to Ag inc. An to Ar inc.
99a	UJ46418	Tap Bolt, 5/16" x 7/8" Hex. Hd. (Cad. Pl.)		Cb to Cd inc.
100	UJ47767	Lock Washer, 5/16" Pl. S. (Cad. Pl.)		Ad to Ag inc. An to Ar inc. Cb to Cd inc.
101	UJ50038	Cap Screw, 5/16" x 1" hex. head steel (Cad. Pl.)		Ad to Ag inc. An to Ar inc.
102	UJ46618	Cotter, 1/8" x 3/4" (Tin Pl.)		Aw to Az inc.
103	UJ48009	Nut		Aw to Az inc.
104	UN186824	Spring Cap Complete	C8042-45	Aw to Az inc.
104a	UM186823	. Spring Cap	C8042-45	104
105	UM131308	. Stud	8115-197	104
106	UM186822	Crank	8192-388	Aw to Az inc.
107	UJ68249	Spring for 3 position 4-way controller	7770-242	Aw to Az inc.
108	UJ46315	Bolt, 3/8" x 3-1/2" hex. head steel		Aw to Az inc.
109	UJ46637	Bolt, 3/8" x 2-3/8" square head steel		Aw to Az inc.

REF.	PIECE	DESCRIPTION	DRAWING	USED ON
110	UJ48010	Hex. Nut, 3/8"		Aw to Az inc.
111	UM211	Pin	B10214-1	Aw to Az inc.

RODS AND SPRING TYPE BALL SOCKET CONNECTIONS FOR SWITCH CIRCUIT CONTROLLERS

The Spring Type Ball Socket Connections and Rods are the finest fittings available for use with switch circuit controllers.

The Spring Type Ball Socket Connecting Rods are available in two types as illustrated:

Refs. A and B are equipped with a ball socket for the circuit controller connection and a ball clamp for the switch point connection.

Refs. C and D are equipped with ball sockets for both connections.

The ball sockets are self adjusting. Lost motion in the connections is automatically taken up by the spring which is of ample tension and strength to operate the circuit controller under all conditions. The design is such that the ball connection is captive and cannot escape from the socket even if the rugged spring should break, therefore, no unsafe condition can result. For this reason many users prefer the Refs. C and D designs to secure the advantages of the ball socket construction at both points of connection.

Rugged construction throughout these fittings assures long, trouble-free life and minimum maintenance. A grease fitting on the Spring Type Ball Socket Connection provides for force lubrication. The rods use a thread with rounded roots to provide an assembly which will give long trouble-free life under the severe vibration conditions encountered in service.

A variety of assemblies of rods and sockets provides an arrangement for every need in new installations and for replacement purposes. Substituting the Spring Type Ball Socket Connections for existing screw jaw type fittings provides an economical way to upgrade present installations.

Ball Type Switch Point Lug, Ref. 29, is recommended for use with these rods. The arrangement of eliptical holes provides a means of adjustment for different point drillings and rod alignment.

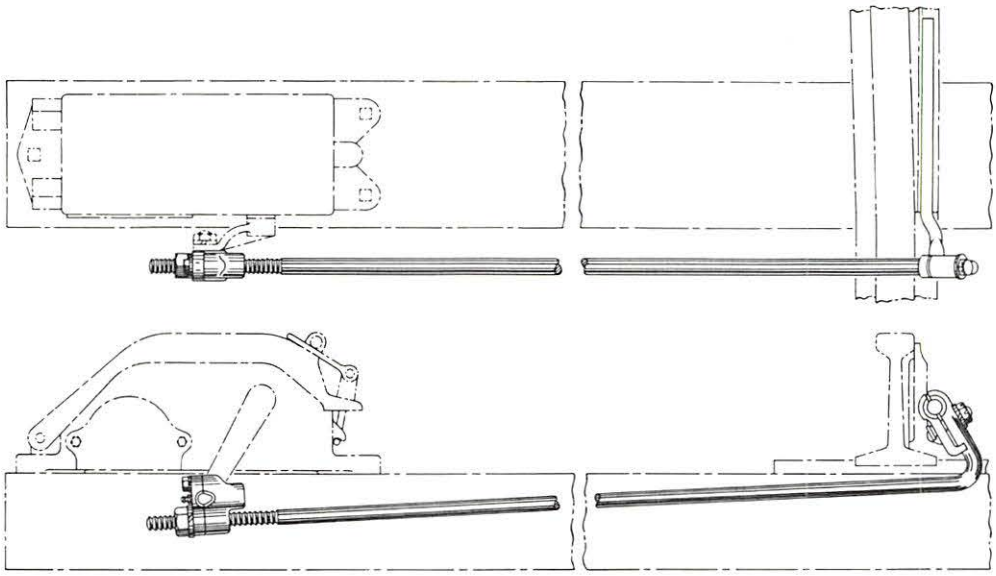

APPLICATION OF SWITCH CIRCUIT CONTROLLER TO NEAR SWITCH POINT

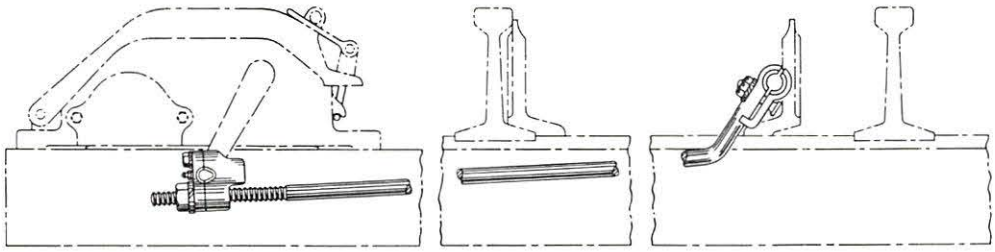

APPLICATION OF SWITCH CIRCUIT CONTROLLER TO FAR SWITCH POINT

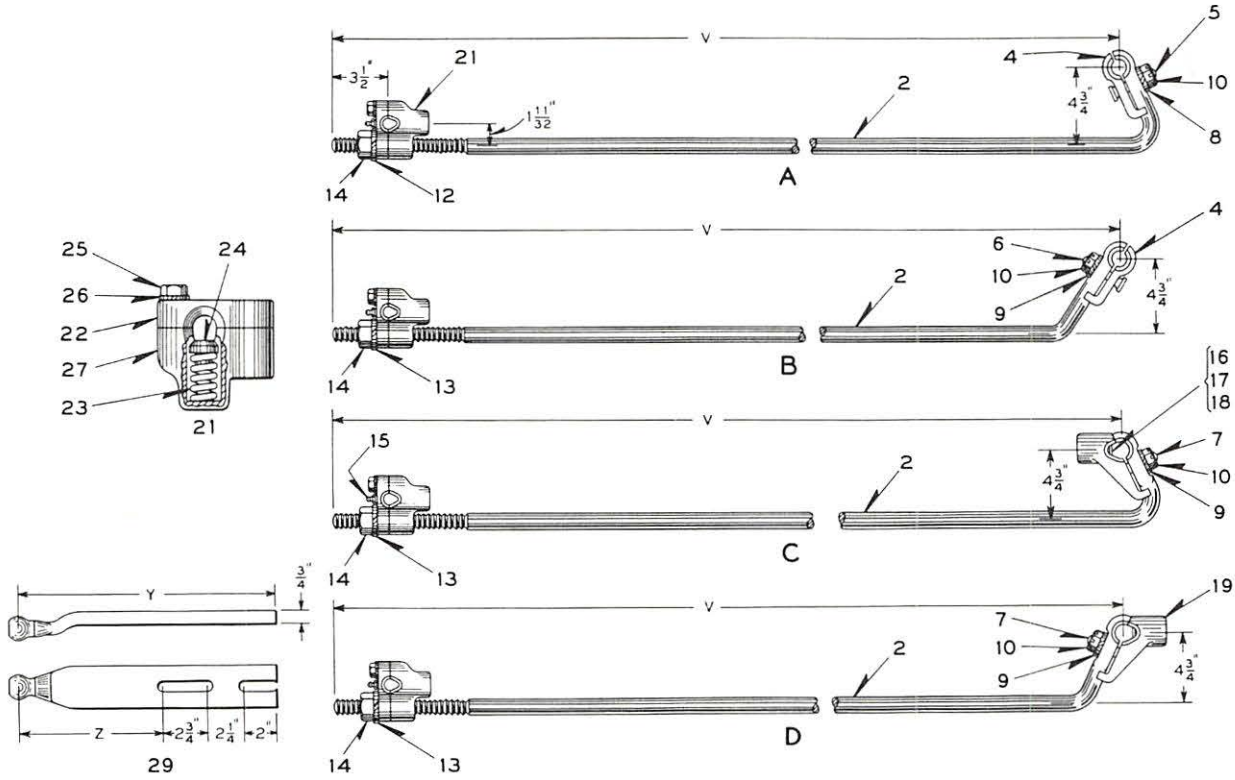

RODS AND SPRING TYPE BALL SOCKET CONNECTIONS

FOR SWITCH CIRCUIT CONTROLLERS

RODS AND SPRING TYPE BALL SOCKET CONNECTIONS FOR SWITCH CIRCUIT CONTROLLERS

Rods and Connections listed on this plate are applicable to Switch Circuit Controllers shown in this catalog section.

Indented item descriptions indicate that the references in the "Used On" column refer to this plate, J1-100.

Order by Plate, Reference, Piece and Abbreviated Description

REF.	PIECE	"V" DIM.	DRAWING
Switch Circuit Controller Operating Rod with Spring Type Ball Socket at one end and Ball Clamp at other end.			
A	UN237118	2' - 3-1/4"	B10287-115
Aa	UN221255	2' - 9-1/2"	B10287-115
Ab	UN224218	3' - 10-1/2"	B10287-115
B	UN225193	7' - 11-1/2"	B10287-119
Switch Circuit Controller Operating Rod with Spring Type Ball Socket Connections at each end.			
C	UN224456	3' - 10-1/2"	B10287-113
D	UN238537	7' - 11-1/2"	B10287-114

REF.	PIECE	DESCRIPTION	DRAWING	USED ON
2	UM341017-001	. Rod	B8887-268A	A
2a	UM341017-005	. Rod	B8887-268A	Aa
2b	UM329367-002	. Rod	B8887-268	Ab, C
2c	UM329155-002	. Rod	B8887-269	B, D
4	UM187470	. Clamp	8060-77	A to B inc.
5	UM272145	. Bolt	8277-135	A to Ab inc.
6	UM187491	. Bolt	8277-135	B
7	UM187491-001	. Bolt	8277-135	C, D
8	UJ47890	. 3/8" Spring Washer (3/8" x 13/64")		A to Ab inc.
9	UJ47546	. 13/16" Spring Washer (3/8" x 13/64")		C, D
10	UJ48180	. Hex. Nut		A to D inc.
11	UJ486001	. Cotter, 1/8" x 1-1/2" S. (Not Shown)		A to D inc.
12	UJ47637	. 1" Spring Washer		A, Aa, Ab
13	UJ47774	. 1" Lock Washer		B to D inc.
14	UJ48030	. Hex. Nut, 1"		All
15	UJ39137	. Lubricating Fitting, 1/8" P.T.		A to D inc.
16	UM212599	. Outer Spring	8124-259	C, D
17	UM212598	. Inner Spring	8124-259	C, D
18	UM106340	. Spring Socket	8084-88	C, D

REF.	PIECE	DESCRIPTION	DRAWING	USED ON
19	UM212574	. Cap	B8060-71	C, D
21	UN212703	. Spring Type Ball Socket Connection Complete	B8060-72	A to D inc.
22	UM212659	. . Cap	B8060-72	21
23	UM199843	. . Spring	8124-259	21
24	UM100539	. . Spring Socket	8084-86	21
25	UJ46221	. . Bolt, 1/2" x 1-3/4" hex. head		21
26	UJ47769	. . Lock Washer, 1/2" S		21
27	UM212660	. . Lug	B8060-72	21
29	UM346588	Point Detector Lug, for 3/4" bolts, "Z" dim. 5", "Y" dim. 12"	B8060-225	All
29a	UM346589	Point Detector Lug, for 3/4" bolts, "Z" dim. 7", "Y" dim. 14"	B8060-225	All
29b	UM346590	Point Detector Lug, for 3/4" bolts, "Z" dim. 9", "Y" dim. 16"	B8060-225	All
29c	UM346591	Point Detector Lug, for 1" bolts, "Z" dim. 5", "Y" dim. 12"	B8060-225	All
29d	UM346592	Point Detector Lug, for 1" bolts, "Z" dim. 7", "Y" dim. 14"	B8060-225	All
29e	UM346593	Point Detector Lug, for 1" bolts, "Z" dim. 9", "Y" dim. 16"	B8060-225	All

HIGHWAY CROSSING SIGNALS

Although the basic concepts of highway crossing protection remain essentially the same from year to year, improved design and arrangement innovations permit us to offer a wide variety of devices with a latitude of applications while holding the number of component assemblies to a minimum.

Versatility of components makes possible the variety of arrangements.

Plate K1-1 shows some of the typical arrangements of standard highway crossing signals. The arrangement required depends upon the importance of the crossing. Suitable combinations for specific signaling applications may be arranged by selecting the various components as desired.

The typical highway crossing signals appearing on this plate are furnished with the lamp units, signs, foundation bolts, and dimensions as shown. The Style HC-81 Lamp Unit is equipped with a 10-volt, 18-watt lamp and the Style HC-9 Lamp Unit is equipped with a 10-volt, 25-watt lamp.

STYLE HC-81 LAMP UNIT

The Style HC-81 Lamp Unit has an 8-3/8" diameter red cover glass (30° horizontal spreadlite, 15° downward deflection) with a 20" diameter black metal background. Other cover glass can be furnished upon request; see Item 4 under "Optional Equipment". A 2-1/4" diameter glass sidelight shield provides an indication to the trainmen that the signal is operating. The light source is a 10-volt, 18-watt single filament lamp.

When supplied for use with the Style HC-9 illuminated sign, the unit is furnished with a yellow cover glass in place of the red cover glass.

SIGNS

The number of signs has been held to a minimum consistent with requirements.

Use of the best available materials and processes assures long life and minimum maintenance.

The clear wording and uniform arrangement is attractive and compels attention.

The RAILROAD CROSSING sign is of reflex-reflecting sheet material permanently bonded to double-channeled aluminum extrusions. Letters are black on a white reflex-reflecting background.

The STOP sign and the TRACKS sign are of reflex-reflecting sheet material permanently bonded to sheet aluminum. Letters are reflex-reflecting white on a black background.

The Style HC-9 Illuminated sign bears the legend NO RIGHT TURN or NO LEFT TURN on a glass stencil. (Other legends can be furnished if requested). The light source is a 10-volt, 25-watt single filament lamp. Letters are clear on a black background. It is designed to provide protection where a street or highway parallels the railroad.

MOUNTING FOR CONVERGING HIGHWAYS

As shown in Figure 1, the 4" pipe posts can be provided to permit mounting of additional Style HC-81 Lamp Units at any angle for converging highways. View A shows the top units located at 112-1/2° to left of signal center line. A 292-1/2° location may be obtained by reassembling the units per dot and dash. Locations are in steps of 22-1/2° as shown by Sec. A-A and any intermediate angles may be obtained as the lamp units can be arranged to align a maximum of 12-1/2° on each side of lamp unit center line as shown by View B. The 6" and 8" pipe posts for cantilever signals can be furnished with hole drilled at 32-1/2°, 55° or 77-1/2° for mounting of additional lamp units for converging highways. Angle of convergence is measured to the left of the signal center line shown in View A.

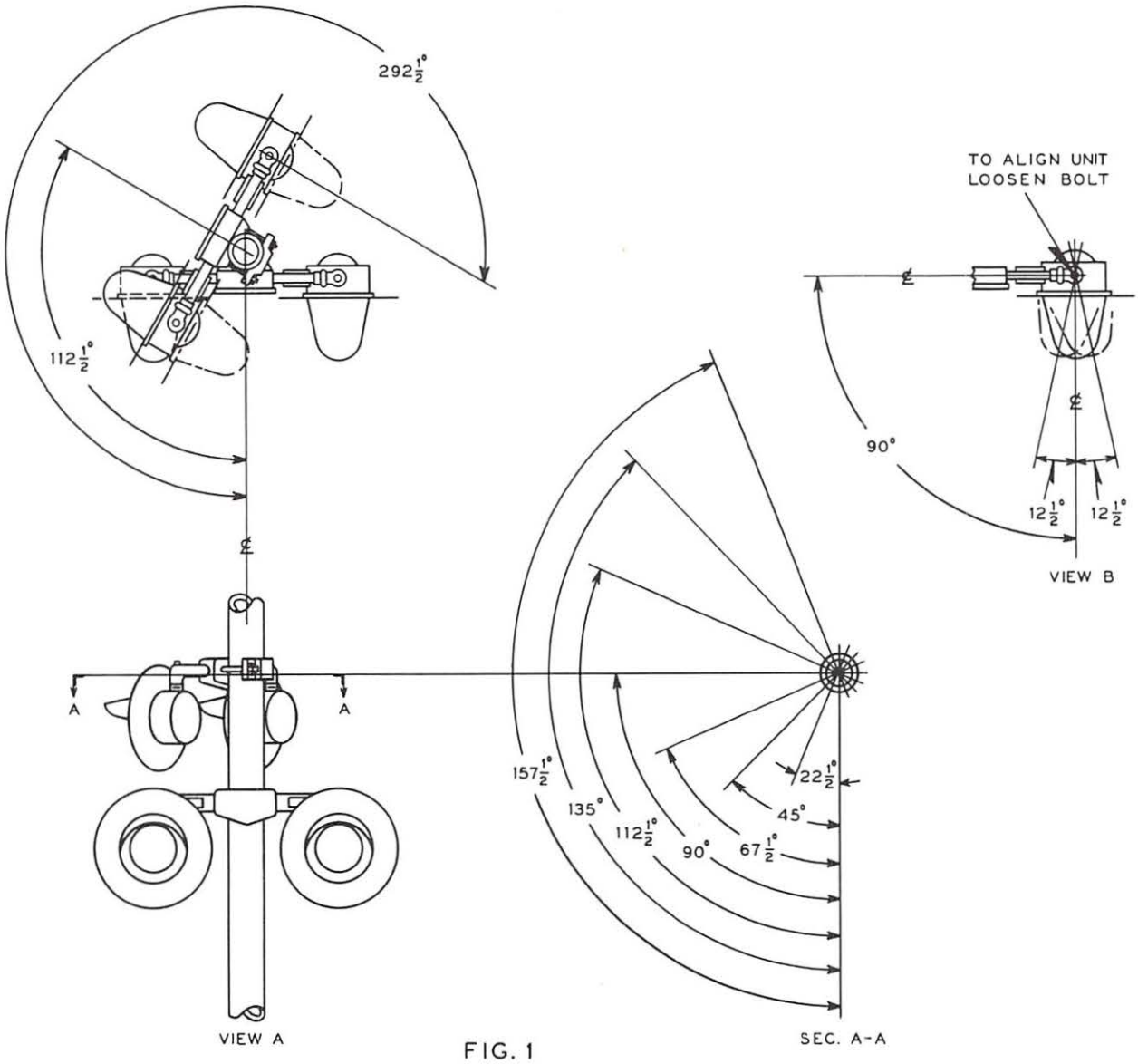

FIG. 1

OPTIONAL EQUIPMENT

The following optional equipment and accessories are available and will be supplied as specified.

1. Crossing bell (Specify A.C. or D.C.).
   (a) Per View Y for the 4" pipe post signals.
   (b) As shown in phantom on cantilever signals.
2. Phankill Units for the Style HC-81 Lamp Unit as shown in phantom on Plate K1-1.1.
3. Lens Guard for the HC-81 Lamp Unit as shown on Plate K1-1.7.
4. Red Cover Glass other than 30° spreadlite, 15° downward deflection:
   (a) 20° horizontal spreadlite, 32° downward deflection.
   (b) Diffusing roundel.
   (c) 70° horizontal spreadlite.
5. Pole Step as shown in phantom in Reference A
6. Extra lamp units on cantilever arranged per View V. Order should specify angle of convergence.

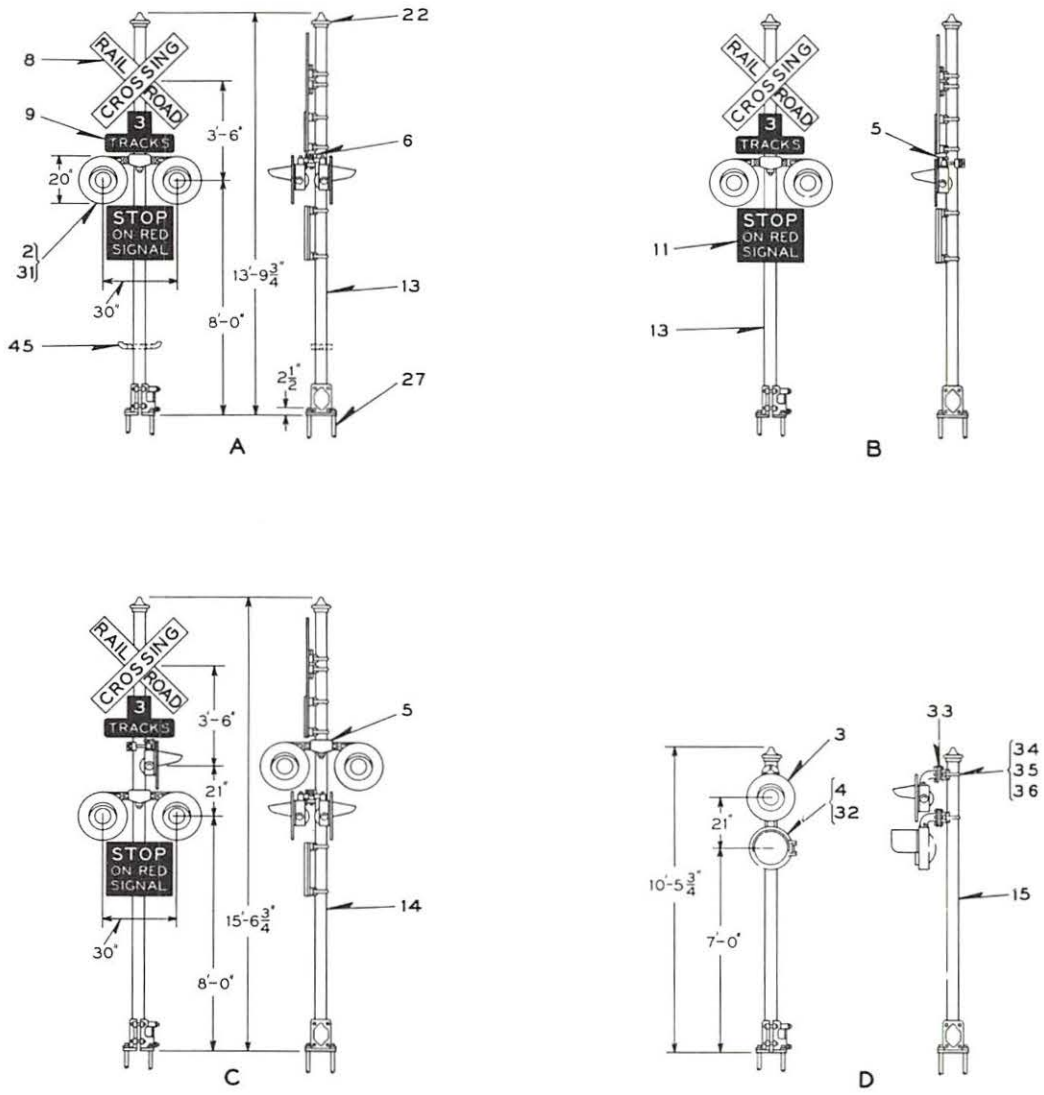

HIGHWAY CROSSING SIGNALS

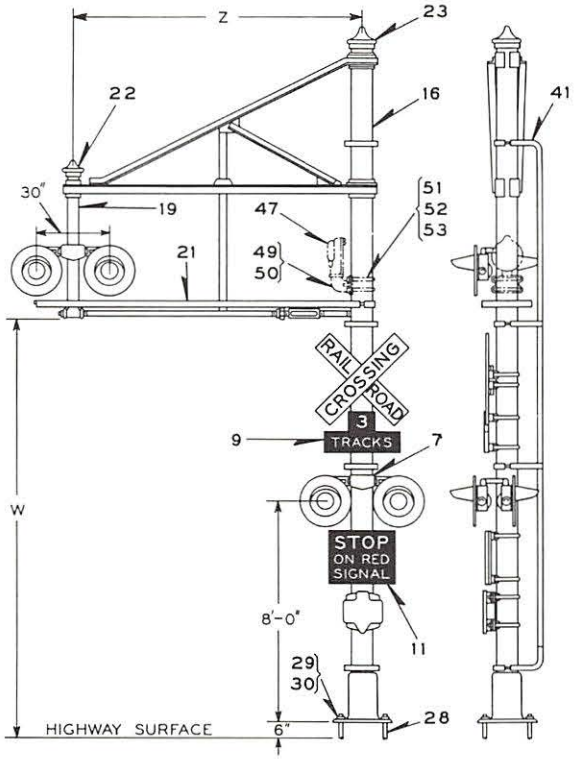

E

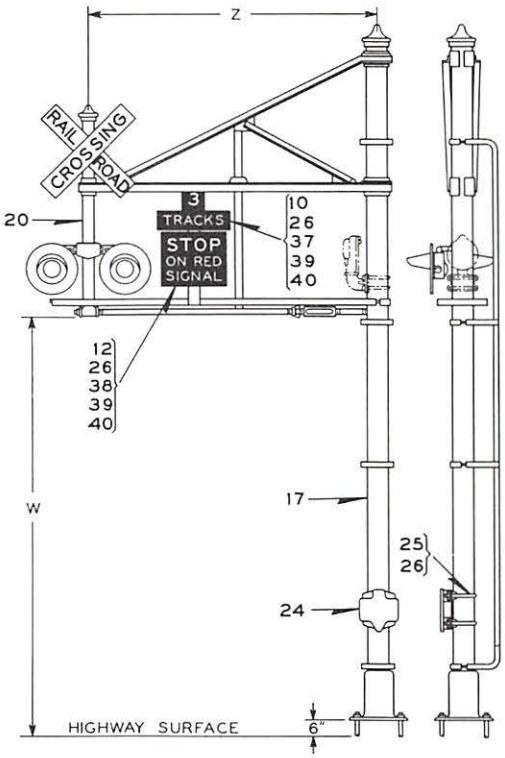

F

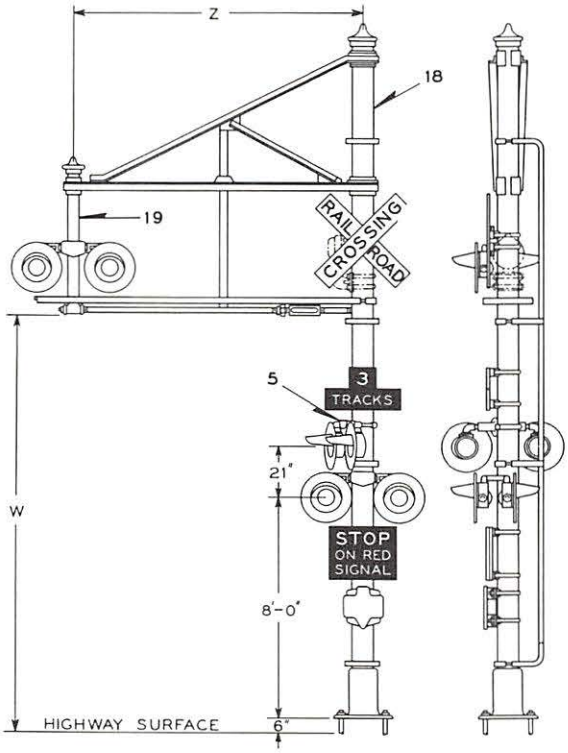

G

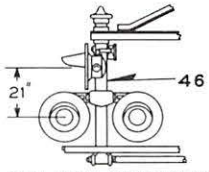

LAMP UNIT ARRANGEMENT
ON CANTILEVER FOR
CONVERGING HIGHWAY
VIEW V

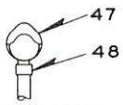

CROSSING BELL
VIEW Y

HIGHWAY CROSSING SIGNALS

HIGHWAY CROSSING SIGNALS

Highway Crossing Signals illustrated are assemblies of standard components and as only typical arrangements are shown, the piece numbers for complete signals have been omitted. Orders for any of the typical assemblies should specify Plate, Reference, and Abbreviated Description. Orders for signals (made from standard components) other than the typicals should specify "Similar to Ref. --- except (list exceptions)".

Order by Plate, Reference, Piece and Abbreviated Description

REF.	PIECE	DESCRIPTION	DRAWING	USED ON
A		Highway Crossing Signal Complete with junction box base as shown. (4 lamp units for indication in two directions). Orders should specify numeral desired on tracks sign	D66365	
Aa		Highway Crossing Signal Complete with clamp base without junction box. (4 lamp units for indication in two directions.) Orders should specify numeral desired on tracks sign	D66365	
B		Highway Crossing Signal Complete with junction box base as shown (2 lamp units for indication in one direction). Orders should specify numeral desired on tracks sign	D66365	
Ba		Highway Crossing Signal Complete with clamp base without junction box. (2 lamp units for indication in one direction). Orders should specify numeral desired on tracks sign	D66365	
C		Highway Crossing Signal Complete with junction box base as shown (4 lamp units for indication in two directions for main highway and 2 lamp units for indication in one direction for converging highway) Orders should specify numeral desired on tracks sign and angle of convergence.	D66365	
Ca		Highway Crossing Signal Complete with clamp base without junction box. (4 lamp units for indication in two directions for main highway and 2 lamp units for indication in one direction for converging highway) Orders should specify numeral desired on tracks sign and angle of convergence	D66365	
D		Highway Crossing Signal Complete with junction box base as shown. With HC-9 illuminated sign and HC-81 flashing lamp unit with yellow cover glass. Orders should specify legend desired - "No Right Turn" or "No Left Turn".	B8912	
Da		Highway Crossing Signal Complete with clamp base without junction box. With HC-9 illuminated sign and HC-81 flashing lamp unit with yellow cover glass. Orders should specify legend desired - "No Right Turn" or "No Left Turn"	B8912	

Cantilever Type Highway Crossing Signal Complete with solid base as shown. (4 lamp units on main mast and 4 lamp units on cantilever for indication in two directions) Orders should specify numeral desired on tracks sign.

Ref.	Piece No.	Dim. W.	Dim. Z.	Main Mast	Drawing
E		14'-6"	6'-0"	6" extra strong pipe	F80126
Ea		14'-6"	8'-0"	6" extra strong pipe	F80126
Eb		14'-6"	10'-0"	8" standard pipe	F80126
Ec		14'-6"	12'-0"	8" extra strong pipe	F80126
Ed		17'-0"	6'-0"	6" extra strong pipe	F80126
Ee		17'-0"	8'-0"	8" standard pipe	F80126
Ef		17'-0"	10'-0"	8" standard pipe	F80126
Eg		17'-0"	12'-0"	8" extra strong pipe	F80126

Cantilever Type Highway Crossing Signal Complete with solid base as shown (4 lamp units on cantilever for indication in two directions) Orders should specify numeral desired on tracks sign.

Ref.	Piece No.	Dim. W.	Dim. Z.	Main Mast	Drawing
F		14'-6"	6'-0"	6" extra strong pipe	F80126
Fa		14'-6"	8'-0"	6" extra strong pipe	F80126
Fb		14'-6"	10'-0"	8" standard pipe	F80126
Fc		14'-6"	12'-0"	8" extra strong pipe	F80126
Fd		17'-0"	6'-0"	6" extra strong pipe	F80126
Fe		17'-0"	8'-0"	8" standard pipe	F80126
Ff		17'-0"	10'-0"	8" standard pipe	F80126
Fg		17'-0"	12'-0"	8" extra strong pipe	F80126

Cantilever Type Highway Crossing Signal Complete with solid base as shown. (4 lamp units on main mast and 4 lamp units on cantilever for indication in two directions for main highway and 2 lamp units on main mast for indication in one direction for converging highway) Orders should specify numeral desired on tracks sign and angle of convergence.

Ref.	Piece No.	Dim. W.	Dim. Z.	Main Mast	Drawing
G		14'-6"	6'-0"	6" extra strong pipe	F80126
Ga		14'-6"	8'-0"	6" extra strong pipe	F80126
Gb		14'-6"	10'-0"	8" standard pipe	F80126
Gc		14'-6"	12'-0"	8" extra strong pipe	F80126
Gd		17'-0"	6'-0"	6" extra strong pipe	F80126
Ge		17'-0"	8'-0"	8" standard pipe	F80126
Gf		17'-0"	10'-0"	8" standard pipe	F80126
Gg		17'-0"	12'-0"	8" extra strong pipe	F80126

REF.	PIECE	DESCRIPTION	DRAWING	USED ON
2	UO249402	. Style HC-81 Lamp Unit with 8-3/8" diameter red cover glass (30° spreadlite - 15° downward deflection) complete with 20" diameter background (Without lamp bulb) For details see Plate K1-1.1	C9481-3	A to Ca E to Gg
3	UN210230	. Style HC-81 Lamp Unit with 8-3/8" diameter yellow cover glass (30° spreadlite -15° downward deflection) complete with 20" diameter background. For use with HC-9 illuminated sign (without lamp bulb) For details see Plate K1-1.1	C9481-3	D, Da
4	UN207949	. Style HC-9 Illuminated Sign Complete. Legend: No Left Turn. (Without lamp bulb) For details see Plate K1-1.2	C16646-1	D, Da
4a	UN207950	. Style HC-9 Illuminated Sign Complete. Legend: No Right Turn. (Without lamp bulb) For details see Plate K1-1.2	C16646-1	D, Da
5	UO380592	. Combined Junction Box and Cross Arm for two lamp units, complete with mounting fittings for 4" pipe post. For details see Plate K1-1.3	C9476-1	B, Ba
6	UO380595	. Combined Junction Box and Cross Arm for four lamp units, complete with mounting fittings for 4" pipe post. For details see Plate K1-1.3	C9476-2	A, Aa, C, Ca, E to Gg
7	UO380596	. Combined Junction Box and Cross Arm for four lamp units, complete with mounting fittings for 6" pipe post. For details see Plate K1-1.3	C9476-2	E, Ea, Ed, Ee, F, Fa, Fd, Fe, G, Ga, Gd, Ge
7a	UO380597	. Combined Junction Box and Cross Arm for four lamp units, complete with mounting fittings for 8" pipe post. For details see Plate K1-1.3	C9476-2	Eb, Ec, Ef, Eg, Fb, Fc, Ff, Fg, Gb, Gc, Gf, Gg
8	UO373482	. Railroad Crossing Sign Complete (Reflex-Reflecting type) with fittings for mounting to pipe post. When ordering assemblies or details refer to Plate K1-1.4	D66379-4	All
9	UO373476	. Tracks Sign complete (Reflex-Reflecting type) with fittings for mounting to pipe post. When ordering assemblies or details refer to Plate K1-1.4.	D66379-2	A to Ca, E to Eg, G to Gg
10	UO387112	. Tracks Sign Complete (Reflex-Reflecting type) for mounting to cantilever. When ordering assemblies or details refer to Plate K1-1.4	D66379-2	F to Fg
11	UO373338	. Stop On Red Signal Sign Complete. (Reflex-Reflecting type) with fittings for mounting to pipe post. When ordering assemblies or details refer to Plate K1-1.4	D66379-1	A to Ca, E to Eg, G to Gg

REF.	PIECE	DESCRIPTION	DRAWING	USED ON
12	UN373332	. Stop On Red Signal Sign Complete (Reflex-Reflecting type) for mounting to cantilever. When ordering assemblies or details refer to Plate K1-1.4	C66379-1	F to Fg
13	UN268867	. 4" Pipe Post with junction box base	C50037-1	A, B
13a	UN195171	. 4" Pipe Post with clamp base without junction box. .	C50037-1	Aa, Ba
*14	UN371113	. 4" Pipe Post with junction box base. For top units located at 22-1/2° to left of center line.	C50037-2	C, Ca
*14a	UN371114	. 4" Pipe Post with junction box base. For top units located at 45° to left of center line.	C50037-2	C, Ca
*14b	UN371115	. 4" Pipe Post with junction box base. For top units located at 67-1/2° to left of center line.	C50037-2	C, Ca
*14c	UN371116	. 4" Pipe Post with junction box base. For top units located at 90° to left of center line.	C50037-2	C, Ca
*14d	UN371117	. 4" Pipe Post with junction box base. For top units located at 112-1/2° to left of center line	C50037-2	C, Ca
*14e	UN380259	. 4" Pipe Post with junction box base. For top units located at 135° to left of center line	C50037-2	C, Ca
*14f	UN380260	. 4" Pipe Post with junction box base. For top units located at 157-1/2° to left of center line	C50037-2	C, Ca
*14g	UN371108	. 4" Pipe Post with clamp base without junction box. For top units located at 22-1/2° to left of center line	C50037-2	C, Ca
*14h	UN371109	. 4" Pipe Post with clamp base without junction box. For top units located at 45° to left of center line. . .	C50037-2	C, Ca
*14j	UN371110	. 4" Pipe Post with clamp base without junction box. For top units located at 67-1/2° to left of center line	C50037-2	C, Ca
*14k	UN371111	. 4" Pipe Post with clamp base without junction box. For top units located at 90° to left of center line . .	C50037-2	C, Ca
*14m	UN371112	. 4" Pipe Post with clamp base without junction box. For top units located at 112-1/2° to left of center line	C50037-2	C, Ca
*14n	UN380257	. 4" Pipe Post with clamp base without junction box. For top units located at 135° to left of center line. .	C50037-2	C, Ca
*14p	UN380258	. 4" Pipe Post with clamp base without junction box. For top units located at 157-1/2° to left of center line	C50037-2	C, Ca
		* NOTE: See preceding writeup for diagrams of pole drilling for Refs. 14 to 14p inclusive.		
15	UN217620	. 4" Pipe Post with junction box base.	B9893-377	D
15a	UN210296	. 4" Pipe Post with clamp base without junction box. .	B9893-383	Da

Pipe Post with solid base. Includes clamps for attaching cantilever.

Ref.	Piece	Size of Pipe	Drawing	Used On
16	UN380441	6" extra strong	C50037-22	E, Ea
16a	UN380451	8" standard	C50037-23	Eb
16b	UN380456	8" extra strong	C50037-23	Ec
16c	UN380446	6" extra strong	C50037-22	Ed
16d	UN380461	8" standard	C50037-23	Ee
16e	UN380466	8" standard	C50037-23	Ef
16f	UN380471	8" extra strong	C50037-23	Eg
17	UN380440	6" extra strong	C50037-22	F, Fa
17a	UN380450	8" standard	C50037-23	Fb
17b	UN380455	8" extra strong	C50037-23	Fc
17c	UN380445	6" extra strong	C50037-22	Fd
17d	UN380460	8" standard	C50037-23	Fe
17e	UN380465	8" standard	C50037-23	Ff
17f	UN380470	8" extra strong	C50037-23	Fg

Pipe Post with solid base. Includes clamps for attaching cantilever. With hole for mounting lamp units for converging highway.

Ref.	Piece	Angle of Convergence*	Size of Pipe	Drawing	Used On
18	UN380442	77-1/2°	6" extra strong	C50037-22	G, Ga
18a	UN380443	55°	6" extra strong	C50037-22	G, Ga
18b	UN380444	32-1/2°	6" extra strong	C50037-22	G, Ga
18c	UN380452	77-1/2°	8" standard	C50037-23	Gb
18d	UN380453	55°	8" standard	C50037-23	Gb
18e	UN380454	32-1/2°	8" standard	C50037-23	Gb
18f	UN380457	77-1/2°	8" extra strong	C50037-23	Gc
18g	UN380458	55°	8" extra strong	C50037-23	Gc
18h	UN380459	32-1/2°	8" extra strong	C50037-23	Gc
18j	UN380447	77-1/2°	6" extra strong	C50037-22	Gd
18k	UN380448	55°	6" extra strong	C50037-22	Gd
18m	UN380449	32-1/2°	6" extra strong	C50037-22	Gd
18n	UN380462	77-1/2°	8" standard	C50037-23	Ge
18p	UN380463	55°	8" standard	C50037-23	Ge
18q	UN380464	32-1/2°	8" standard	C50037-23	Ge
18r	UN380467	77-1/2°	8" standard	C50037-23	Gf

Pipe Post with solid base. Includes clamps for attaching cantilever. With hole for mounting lamp units for converging highway. (Cont'd.).

Ref.	Piece	Angle of Convergence*	Size of Pipe	Drawing	Used On
18s	UN380468	55°	8" standard	C50037-23	Gf
18t	UN380469	32-1/2°	8" standard	C50037-23	Gf
18u	UN380472	77-1/2°	8" extra strong	C50037-23	Gg
18v	UN380473	55°	8" extra strong	C50037-23	Gg
18w	UN380474	32-1/2°	8" extra strong	C50037-23	Gg

* NOTE: See preceding writeup for pole drilling for Refs. 18 to 18w inclusive.

REF.	PIECE	DESCRIPTION	DRAWING	USED ON
19	UN380569	. 4" Pipe Post	C50037-24	E to Eg, G to Gg
20	UN380568	. 4" Pipe Post	C50037-24	F to Fg
21	UN260751	. Platform Complete for cantilever signal with 6" pipe and 6' - 0" span	B7501-234	E, Ed, F, Fd, G, Gd
21a	UN313919-001	. Platform Complete for cantilever signal with 6" pipe and 8' - 0" span.	B7501-308	Ea, Fa, Ga
21b	UN313919	. Platform Complete for cantilever signal with 8" Pipe and 8' - 0" span	B7501-308	Ee, Fe, Ge
21c	UN380556	. Platform Complete for cantilever signal with 8" Pipe and 10' - 0" span	C50061-4	Eb, Ef, Fb, Ff, Gb, Gf
21d	UN380539	. Platform Complete for cantilever signal with 8" Pipe and 12' - 0" span	C50061-2	Ec, Eg, Fc Fg, Gc, Gg
22	UN145739	. Pinnacle for 4" pipe post	B8121-10	All
23	UN168877	. Pinnacle for 6" pipe post	B8121-18	E, Ea, Ed, F, Fa, Fd, G, Ga, Gd,
23a	UN215093	. Pinnacle for 8" pipe post	B8121-19	Eb, Ec, Ee, Ef, Eg, Fb, Fc, Fe, Ff, Fg, Gb, Gc, Ge, Gf, Gg
24	UN373993	. Junction Box (for details see Plate L3-151).	D66357-2	E to Gg
25	UM109746	. U-Bolt for 6" pipe post.	8782-37	E, Ea, Ed, F, Fa, Fd, G, Ga, Gd
25a	UM215117	. U-Bolt for 8" pipe post	8782-220	Eb, Ec, Ee, Ef, Eg, Fb, Fc, Fe, Ff, Fg, Gb, Gc, Ge, Gf, Gg

REF.	PIECE	DESCRIPTION	DRAWING	USED ON
26	UJ48020	. Hex. Nut, 5/8" steel (Cad. Pl.)		E to Gg
27	UM254806	. Foundation Bolt, 1" x 24"	7913-52	A to Da
28	UM169805	. Foundation Bolt, 1" x 36"	7913-370	E, Ea, Ed, F, Fa, Fd, G, Ga, Gd
28a	UM232960	. Foundation Bolt, 1-1/4" x 42"	7913-215	Eb, Ec, Ee, Ef, Eg, Fb, Fc, Fe, Ff, Fg, Gb, Gc Ge, Gf, Gg
29	UJ48030	. Hex. Nut, 1" steel (Zinc Pl.)		A to Da, E, Ea, Ed, F, Fa, Fd, G, Ga, Gd
29a	UJ48176	. Hex. Nut, 1-1/4" steel (Zinc Pl.)		Eb, Ec, Ee, Ef, Eg, Fb, Fc, Fe, Ff, Fg, Gb, Gc, Ge, Gf, Gg
30	UJ47509	. Plate Washer, 1" steel (Zinc Pl.)		A to Ad, E, Ea, Ed, F, Fa, Fd, G, Ga, Gd
30a	UJ47510	. Plate Washer, 1-1/4" steel (Zinc Pl.)		Eb, Ec, Ee, Ef, Eg, Fb, Fc, Fe, Ff, Fg, Gb, Gc, Ge, Gf, Gg
31	UJ71463	. Lamp, 10 volt, 18 watt, single filament for HC-81 lamp unit	12409-12	All
32	UJ71574	. Lamp, 10 volt, 25 watt, single filament for HC-9 lamp unit	12409-12	D, Da
33	UN104823	. Adapter Bracket	C9482-13	D, Da
34	UM172193	. U-Bolt	8782-108	D, Da
35	UJ47503	. Washer, 1/2" steel plate (Cad. Pl.)		D, Da
36	UJ48013	. Hex. Nut, 1/2" steel (Cad. Pl.)		D, Da
37	UN387114	. Mounting Strap for Tracks Sign	10914-3407	F to Fg
38	UN387115	. Mounting Strap for Stop On Red Signal Sign	10914-1060	F to Fg
39	UJ46695	. Bolt, 5/8" x 1-1/2" sq. hd. steel (Cad. Pl.) for attaching mounting straps Refs. 37 and 38 to mounting bracket		F to Fg
40	UJ47771	. Lock Washer, 5/8" steel (Cad. Pl.)		F to Fg
41	UO380590	. Ladder Complete for cantilever signal with 6" pipe and 14' - 6" road clearance	C50045-7	E, Ea, F, Fa, G, Ga
41a	UO380591	. Ladder Complete for cantilever signal with 8" pipe and 14' - 6" road clearance	C50045-7	Eb, Ec, Fb Fc, Gb, Gc

REF.	PIECE	DESCRIPTION	DRAWING	USED ON
41b	UO380579	. Ladder Complete for cantilever signal with 6" pipe and 17' - 0" road clearance	C50045-6	Ed, Fd, Gd
41c	UO380583	. Ladder Complete for cantilever signal with 8" pipe and 17' - 0" road clearance	C50045-6	Ee, Ef, Eg, Fe, Ff, Fg, Ge, Gf, Gg
45	UN301758	Step	12536-9	A to Da
46	UN380570	4" Pipe Post with tee and clamp for attaching cantilever. For top units located at 90° to left of center line. See preceding writeup for diagrams of pole drilling	C50037-24	E to Eg, G to Gg
47	UN86181	Model 15A, D.C. Crossing Bell Complete. 20 ohms per pair of coils, 8 volts. For details see Plate K1-1.6	C8807-1	All
47a	UN74357	Model 15A, D.C. Crossing Bell Complete. 31 ohms per pair of coils, 10 volts. For details see Plate K1-1.6	C8807-1	All
47b	UN171021	Model 15A, D.C. Crossing Bell Complete. 31 ohms per pair of coils, 10 volts. With condenser for radio interference. For details see Plate K1-1.6	C8807-1	All
47c	UN79654	Model 15A, D.C. Crossing Bell Complete. 5000 ohms per pair of coils, 220 volts. For details see Plate K1-1.6	C8807-1	All
47d	UN152837	Model AH-10, A.C. Crossing Bell Complete, 10 ohms per pair of coils, 110/100 volts, 25/100 cycles. For details see Plate K1-1.5	C8913-2	All
48	UN82254	Adapter for mounting crossing bell on top of 4" pipe post	C6041-10	A to Ca
49	UM61931	Bracket	C6041-10	E to Gg
50	UM380919	Pipe	B10925-5	E to Gg
51	UM44199	U-Bolt	8782-69	E, Ea, Ed, F, Fa, Fd, G, Ga, Gd
51a	UN159492	Hinged U-Bolt	8782-187	Eb, Ec, Ee, Ef, Eg, Fb, Fc, Fe, Ff, Fg, Gb, Gc, Ge, Gf, Gg
52	UJ47772	Spring Lock Washer, 3/4" steel (Cad. Pl.)		E to Gg
53	UJ48026	Hex. Nut, 3/4" steel (Cad. Pl.)		E to Gg

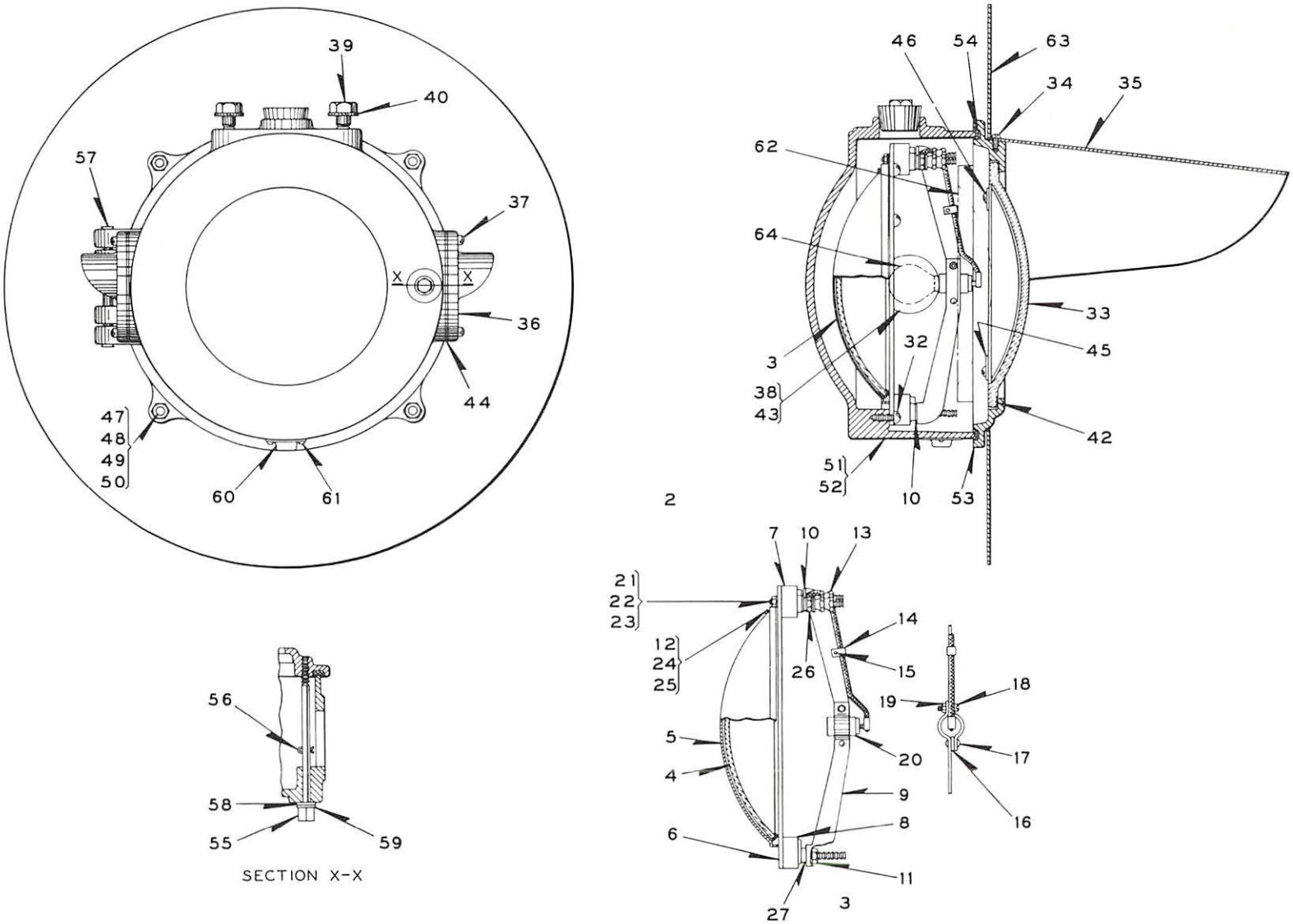

STYLE HC-81 LAMP UNITS

STYLE HC-81 LAMP UNITS
FOR HIGHWAY CROSSING SIGNALS

Units shown on this catalog plate do not include Lamp Ref. 64

Indented item descriptions indicate that the references in the "Used On" column refer to this Plate, K1-1.1. All other references refer to the General Plate K1-1.

Order by Plate, Reference, Piece and Abbreviated Description

REF.	PIECE	DESCRIPTION	DRAWING	USED ON
2	UO193766	Style "HC-81" Lamp Unit Complete with 20" Background (Order should specify unit desired by referring to Refs. 2a thru 2c inc.	C9481-3	All
2a	UN193602	. Style "HC-81" Lamp Unit with 8-3/8" Diameter Red Cover Glass (30° Horizontal Spreadlite, 15° Downward Deflection) without background	C9481-3	2
2b	UN212368	. Style "HC-81" Lamp Unit with 8-3/8" Diameter Red Cover Glass (30° Horizontal Spreadlite, 15° Downward Deflection) With Phankill Unit, without background	C9481-3	2
2c	UN210230	. Style "HC-81" Lamp Unit with 8-3/8" Diameter Yellow Cover Glass (30° Horizontal Spreadlite, 15° Downward Deflection) without background	C9481-3	2
3	UN193600	. . Reflector Assembly, Complete	C9482-4	2a thru 2c
4	UN293215	. . . Reflector Only	B12652-15	3
5	UM193594	. . . Reflector Holder	C9482-2	3
6	UM193593	. . . Retaining Ring	C9482-2	3
7	UN193599	. . . Terminal Block (With two Binding Posts)	9968-1128	3
8	UN193598	. . . Terminal Block (With one Binding Post)	9968-1128	3
9	UM193596	. . . Receptacle Holder	C9482-2	3
10	UJ47818	. . . Washer	7828-139	3
11	UM29103	. . . Nut	8109-194	3
12	UJ48002	. . . Hex. Nut, 1/4" - 20 steel (Tin Pl.)		3
13	UM29101	. . . Nut	8109-193	3
14	UM147988	. . . Clip	11893-393	3
15	UJ49811	. . . Rivet	10301-1	3
16	UM192815	. . . Spacer	7828-377	3
17	UJ49081	. . . Rivet, 5/32" x 5/16" rd. hd. ph. bz. (N. Pl.).		3
18	UJ51255	. . . Machine Screw, No. 8-32 x 3/8" fil. hd. br. (N. Pl.)		3
19	UM24236	. . . Nut	8109-172	3

REF.	PIECE	DESCRIPTION	DRAWING	USED ON
20	UJ72466	. . . Receptacle	12415-40	3
21	UJ52298	. . . Machine Screw, No. 10-32 x 3/4" fil. hd. steel (Tin. Pl.)		3
22	UJ47733	. . . Lock Washer, No. 10 plain steel (Tin Pl.)		3
23	UJ48172	. . . Hex. Nut, No. 10-32 steel (Tin Pl.)		3
24	UJ52642	. . . Machine Screw, 1/4" - 20 x 1/2" rd. hd. steel (Tin Pl.)		3
25	UJ47775	. . . Lock Washer, 1/4" plain steel (Tin Pl.)		3
26	UM127260	. . . Nut	8109-194	3
27	UM102230	. . . Washer	7826-180	3
32	UJ52580	. . Machine Screw, No. 14-24 x 3/8" rd. hd. steel (Tin Pl.)		2a, 2b, 2c
33	UJ53111	. . Red Cover Glass, 8-3/8" Diameter (30° Horizontal Spreadlite, 15° Downward Deflection)	B8276-83	2a, 2b
33a	UJ53342	. . Yellow Cover Glass, 8-3/8" Diameter (30° Horizontal Spreadlite, 15° Downward Deflection)	B8276-83	2c
33b	UJ53360	. . Red Cover Glass, 8-3/8" Diameter (20° Horizontal Spreadlite, 32° Downward Deflection)	B8276-84	2a, 2b
33c	UJ53311	. . Red Cover Glass, 8-3/8" Diameter (Diffusing Roundel)	B8276-60	2a, 2b
33d	UJ53345	. . Red Cover Glass, 8-3/8" Diameter (70° Horizontal Spreadlite)	B8276-81	2a, 2b
34	UJ51664	. . Machine Screw No. 10-32 x 1/4" rd. hd. br. (N. Pl.)		2a, 2b, 2c
35	UM147975	. . Hood	C8964-62	2a, 2b, 2c
36	UM124375	. . Hood for side lights	C8964-22	2a, 2b, 2c
37	UJ51299	. . Machine Screw, No. 10-32 x 5/8" fil. hd. br. (N. Pl.)		2a, 2b, 2c
38	UJ53417	. . Glass Shield (Clear) for side lights (2-1/4" Diameter)	8163-222	2a, 2b, 2c
39	UJ50090	. . Cap Screw, 1/2" x 1-1/4" hex. hd. steel (Cad. Pl.)		2a, 2b, 2c
40	UJ47769	. . Lock Washer, 1/2" plain steel (Cad. Pl.)		2a, 2b, 2c
42	UJ47308	. . Gasket	8078-1499	2a, 2b, 2c
43	UJ47315	. . Gasket	8078-1499	2a, 2b, 2c
44	UJ47316	. . Gasket	8078-1592	2a, 2b, 2c
45	UM169707	. . Clip	11893-568	2a, 2b, 2c
46	UJ51668	. . Machine Screw, No. 10-32 x 1/2" rd. hd. br. (N. Pl.)		2a, 2b, 2c
47	UJ46606	. . Bolt, 1/4" x 20 x 1" sq. hd. steel (Tin Pl.)		2a, 2b, 2c
48	UJ48002	. . Hex. Nut, 1/4" (Tin Pl.)		2a, 2b, 2c
49	UJ47501	. . Plate Washer, 1/4" (Tin Pl.)		2a, 2b, 2c

REF.	PIECE	DESCRIPTION	DRAWING	USED ON
50	UJ47766	. . Lock Washer, 1/4" plain steel (Tin Pl.)		2a, 2b, 2c
51	UN193601	. . Case & Door Complete	C9481-2	2a, 2b, 2c
52	UM193592	. . . Case only	C9482-1	51
53	UM169709	. . . Door	C8964-89	51
54	UM146038	. . . Gasket	8078-717	51
55	UM192919	. . . Locking Stud	8114-803	51
56	UJ48603	. . . Cotter, 1/16" x 1/2" steel (Tin Pl.)		51
57	UM145984	. . . Pin	B10206-1	51
58	UJ47731	. . . Washer	8076-422	51
59	UM38149	. . . Washer	7826-98	51
60	UM170243	. . . Ventilator	11893-573	51
61	UJ52501	. . . Drive Screw, No. 4 x 1/4" rd. hd. hardened (Cad. Pl.)		51
62	UN207075	. . Phankill Unit	C9482-7	2b
63	UM168992	. Background, 20" Diameter	C8964-84	2
64	UJ71463	Lamp, 10 volt, 18 Watt single filament, single contact bayonet candelabra base	12409-12	All

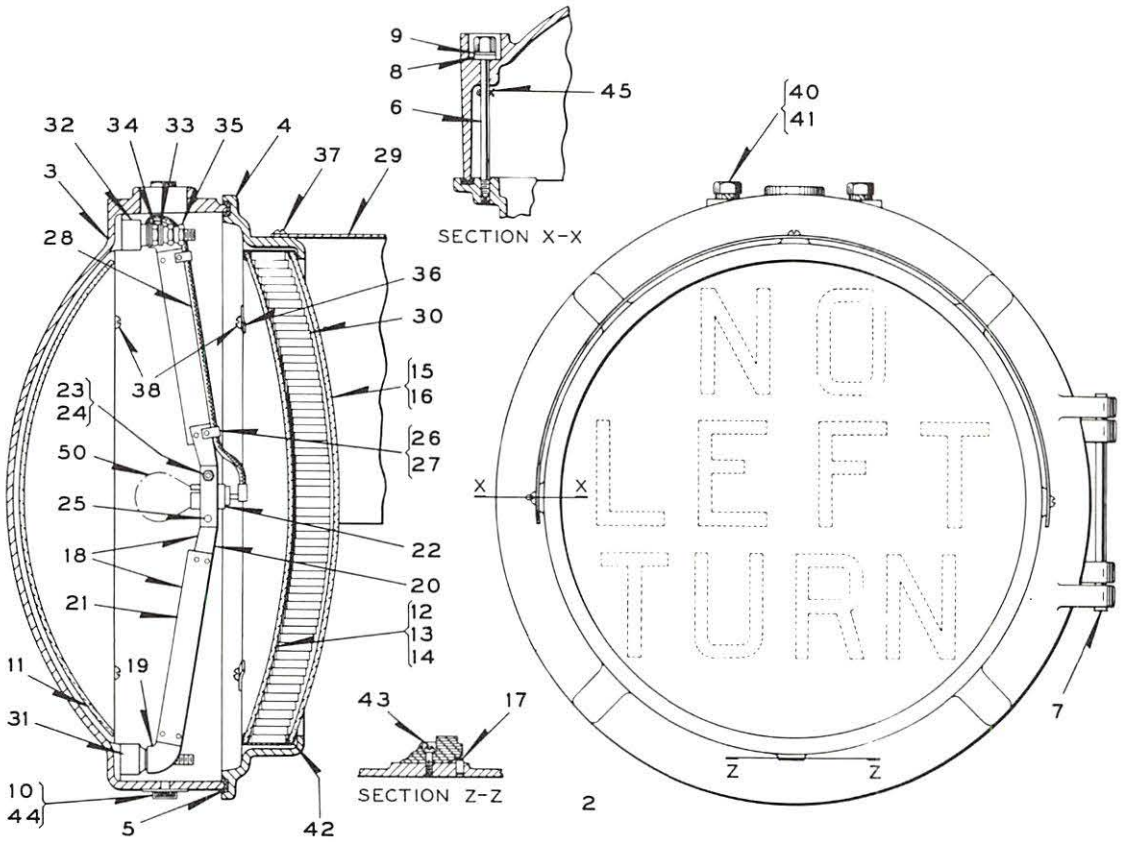

STYLE HC-9 ILLUMINATED SIGN

STYLE HC-9 ILLUMINATED SIGN FOR HIGHWAY CROSSING SIGNALS

Illuminated Signs shown on this Catalog Plate do not Include Lamp Ref. 50

Indented item descriptions indicate that the references in the "Used On" column refer to this Plate, K1-1.2. All other references refer to the General Plate K1-1.

Order by Plate, Reference, Piece and Abbreviated Description

REF.	PIECE	DESCRIPTION	DRAWING	USED ON
2	UN207949	Style HC-9 Illuminated Sign complete (No Left Turn). .	C16646-1	D, Da
2a	UN207950	Style HC-9 Illuminated Sign complete (No Right Turn).	C16646-1	D, Da
3	UM207951	. Case	C16647-1	2, 2a
4	UM207908	. Door	C16647-2	2, 2a
5	UM207916	. Gasket	8078-1579	2, 2a
6	UM177880	. Locking Stud	8114-803	2, 2a
7	UM210214	. Pin	B10206-1	2, 2a
8	UJ47731	. Washer	8078-422	2, 2a
9	UM38149	. Washer	7826-98	2, 2a
10	UM170243	. Ventilator	11893-573	2, 2a
11	UJ53399	. Reflector	12652-16	2, 2a
12	UN224781*	. Glass Stencil Complete with Rubber Gasket, 14" diameter (No Left Turn) clear letters on black background	8163-314	2
12a	UN224780*	. Glass Stencil Complete with Rubber Gasket, 14" diameter (No Right Turn) clear letters on black background	8163-313	2a
13	UJ53396	. . Glass Stencil (No Left Turn)	8163-314	12
13a	UJ53397	. . Glass Stencil (No Right Turn)	8163-313	12a
14	UJ47457	. . Gasket	8078-1887	12
15	UN221718	. Clear Convex Cover Glass, 14" diameter, with rubber gasket	8163-315	2, 2a
15a	UJ53395	. . Clear Convex Cover Glass	8163-315	15
16	UJ47457	. . Gasket	8078-1887	15
17	UM187235	. Pin	8097-466	2, 2a
18	UN207953	. Receptacle Holder Complete	C16647-5	2, 2a
19	UM208510	. . Receptacle Strap	C16647-5	18
20	UM208511	. . Receptacle Strap	C16647-5	18
		* NOTE: Glass stencils having legends other than those listed can be furnished upon request.		

REF.	PIECE	DESCRIPTION	DRAWING	USED ON
21	UM208512	. . Receptacle Strap	C16647-5	18
22	UJ72466	. . Lamp Receptacle Complete	12415-40	18
23	UJ51263	. . Machine Screw, No. 8 - 36 x 3/8" fil. hd.		18
24	UM32498	. . Nut (not shown)	8109-223	18
25	UJ49081	. . Rivet, 5/32" x 5/16" rd. hd. ph. bz.		18
26	UM147988	. . Clip	11893-393	18
27	UJ49811	. . Rivet	10301-1	18
28	UN208513	. . Lead Complete	B9991-14	18
29	UN207915	. Hood	C16647-4	2, 2a
30	UN207911	. Phankill Unit	C16647-3	2, 2a
31	UM193598	. Terminal Block Complete with one Binding Post	9968-1128	2, 2a
32	UM193599	. Terminal Block Complete with two Binding Posts	9968-1128	2, 2a
33	UJ47818	. Washer	7828-139	2, 2a
34	UM127260	. Nut	8109-194	2, 2a
35	UM29101	. Nut	8109-193	2, 2a
36	UM157117	. Clip	11893-473	2, 2a
37	UJ51686	. Machine Screw, No. 14-24 x 3/8" rd. hd.		2, 2a
38	UJ51666	. Machine Screw, No. 10-32 x 3/8" rd. hd.		2, 2a
39	UM207946	. Gasket	8078-1636	2, 2a
40	UJ50090	. Cap Screw, 1/2" - 13 x 1-1/4" hex. hd.		2, 2a
41	UJ47769	. Lock Washer, 1/2"		2, 2a
42	UJ47457	. Gasket	8078-1887	2, 2a
43	UJ52300	. Machine Screw, 10-32 x 5/8" fil. hd. steel		2, 2a
44	UJ52501	. Drive Screw, No. 4 x 1/4" rd. hd. hardened		2, 2a
45	UJ48603	. Cotter Pin, 1/16" x 1/2" steel		2, 2a
46	UM322410	. Gasket, Used with Phankil Unit (not shown)	8078-1736	2, 2a
50	UJ71574	Lamp, 10 Volt, 25 Watt, single filament, single contact bayonet candelabra base	12409-12	2, 2a

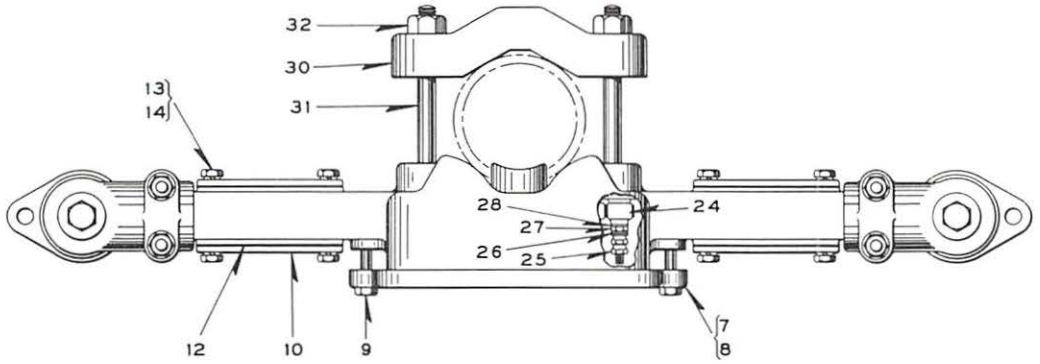

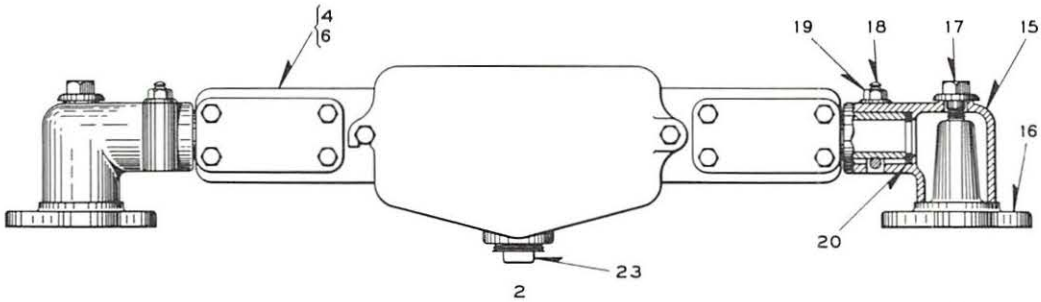

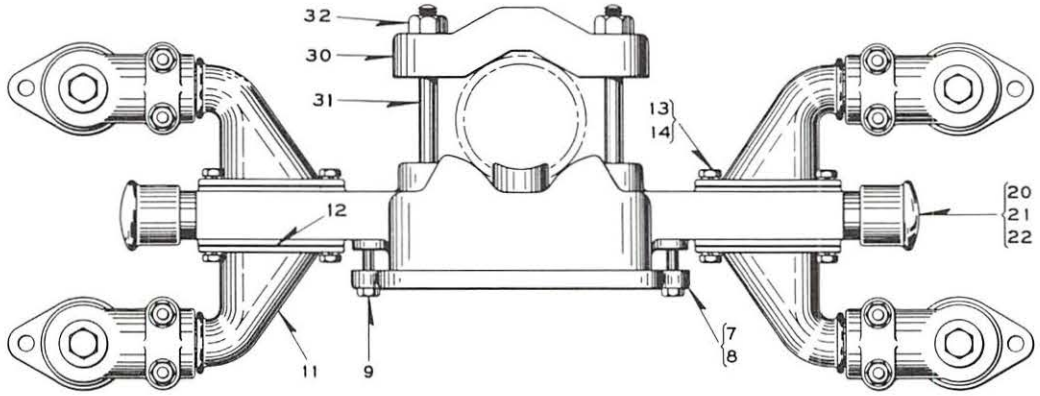

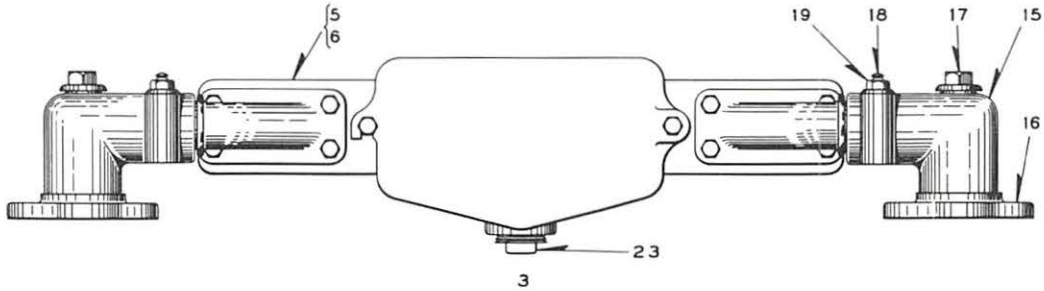

COMBINED JUNCTION BOX AND CROSS ARM

COMBINED JUNCTION BOX AND CROSSARM FOR HIGHWAY CROSSING SIGNALS

Indented item descriptions indicate that the references in the "Used On" column refer to this Plate K1-1.3. All other references refer to Plate K1-1.

Order by Plate, Reference, Piece and Abbreviated Description

REF.	PIECE	DESCRIPTION	DRAWING	USED ON
2	UO380592	Combined Junction Box and Cross Arm Complete with fittings for mounting on 4" pipe. For two lamp units.	C9476-1	B, Ba, C, Ca,
2a	UO380593	Combined Junction Box and Cross Arm Complete with fittings for mounting on 6" pipe. For two lamp units.	C9476-1	G, Ga, Gd
2b	UO380594	Combined Junction Box and Cross Arm Complete with fittings for mounting on 8" pipe. For two lamp units.	C9476-1	Gb, Gc, Ge, Gf, Gg
3	UO380595	Combined Junction Box and Cross Arm Complete with fittings for mounting on 4" pipe. For four lamp units.	C9476-2	A, Aa, C, Ca, E to Gg
3a	UO380596	Combined Junction Box and Cross Arm Complete with fittings for mounting on 6" pipe. For four lamp units.	C9476-2	E, Ea, Ed, G, Ga, Gd
3b	UO380597	Combined Junction Box and Cross Arm Complete with fittings for mounting on 8" pipe. For four lamp units.	C9476-2	Eb, Ec, Ee, Ef, Eg, Gb, Gc, Ge, Gf, Gg
4	UN192761	. Combined Junction Box and Cross Arm Complete. Without mounting fittings, for two lamp units	C9476-1	2, 2a, 2b
5	UN192769	. Combined Junction Box and Cross Arm Complete. Without mounting fittings, for four lamp units	C9476-2	3, 3a, 3b
6	UM192485	. . Combined Junction Box and Cross Arm	C9475-1	4, 5
7	UM192496	. . Cover	C9475-2	4, 5
8	UM194764	. . Gasket	8078-1579	4, 5
9	UJ50060	. . Cap Screw, 3/8" x 2" hex. hd. steel (Cad. Pl.) .		4, 5
10	UM192518	. . Cover Plate	C9475-3	4
11	UM192495	. . Bracket	C9475-2	5
12	UJ47313	. . Gasket	8078-1590	4, 5
13	UJ50052	. . Cap Screw, 3/8" x 7/8" hex. hd. (Cad. Pl.). . . .		4, 5
14	UJ47779	. . Lock Washer, 3/8" pl. steel (Cad. Pl.).		4, 5
15	UM193648	. . Supporting Bracket.	C9475-4	4, 5
16	UM193646	. . Lamp Unit Support	C9475-3	4, 5
17	UN193650	. . Bolt.	8277-137	4, 5
18	UM167609	. . U-Bolt, 3/8"	8782-189	4, 5

REF.	PIECE	DESCRIPTION	DRAWING	USED ON
19	UM335610	. . Hex. Nut, 3/8"	8265-319	4, 5
20	UJ47309	. . Gasket	8078-1582	4, 5
21	UM193647	. . Cap	C9475-3	5
22	UJ50559	. . Set Screw, 1/4" x 1/2" sq. hd. cup point iron (Cad. Pl.)		5
23	UJ32910	. . Pipe Plug, 1-1/4" cast iron (Cad. Pl.)		4, 5
24	UN194765	. . Terminal Block Complete, 3-Way	9968-1137	4, 5
24a	UN181830	. . . Terminal Block without nuts and washers	9968-1100	24
25	UM29101	. . . Nut	8109-193	24
26	UJ47818	. . . Washer	7828-139	24
27	UM29103	. . . Nut	8109-194	24
28	UM40468	. . . Terminal Connector	8064-258	24
29	UJ52300	. . Screw, No. 10-32 x 5/8" fil. hd. steel (Tin Pl.). For attaching terminal block to box (not shown)		4, 5
30	UM192519	. Clamp	C9475-3	2 to 3b
31	UJ46714	. Bolt, 5/8" x 6" sq. hd. steel (Cad. Pl.)		2, 3
31a	UM108489	. Bolt	8277-153	2a, 3a
31b	UM215034	. Bolt	8277-152	2b, 3b
32	UJ48020	. Hex Nut, 5/8" steel (Cad. Pl.)		2 to 3b

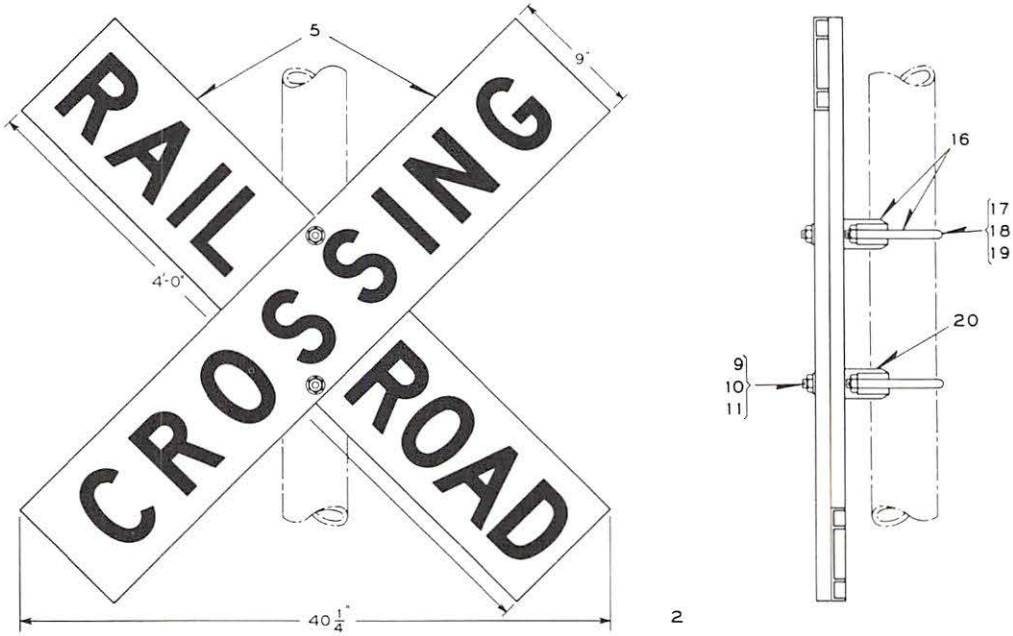

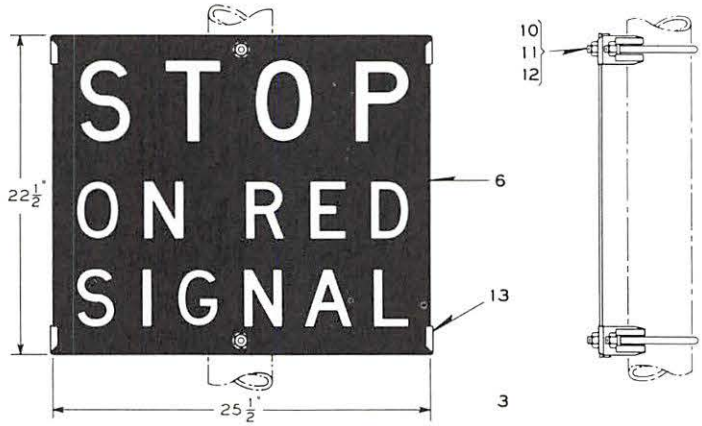

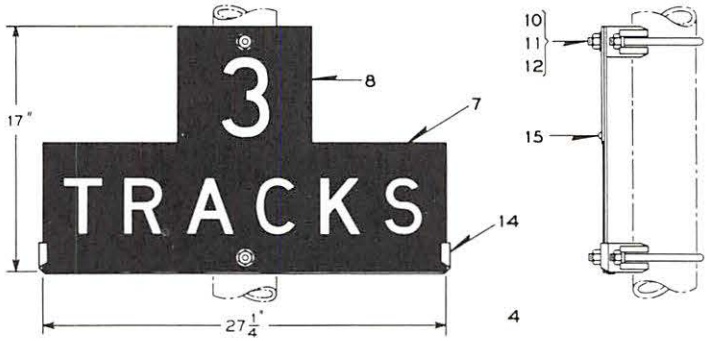

SIGNS FOR HIGHWAY CROSSING SIGNALS

SIGNS FOR HIGHWAY CROSSING SIGNALS

Indented item descriptions indicate that the references in the "Used On" column refer to this plate, K1-1.4. All other references refer to Plate K1-1.

Order by Plate, Reference, Piece and Abbreviated Description

REF.	PIECE	DESCRIPTION	DRAWING	USED ON
2	UO373482	Railroad Crossing Sign Complete. Black letters on white reflex-reflecting background. With fittings for mounting to pipe post. Orders should specify size of pipe post so proper mounting fittings will be furnished	D66379-4	All
3	UO373338	Stop On Red Signal Sign Complete. Reflex-reflecting letters on black background. With fittings for mounting to pipe post. Orders should specify size of pipe post so proper mounting fittings will be furnished . . .	D66379-1	A to Ca, E to Eg, G to Gg
3a	UN373332	Stop On Red Signal Sign Complete. Reflex-reflecting letters on black background. Without mounting fittings for use with mounting strap Ref. 21 for attaching sign to cantilever	D66379-1	F to Fg
4	UO373476	Tracks Sign Complete. Reflex-reflecting letters on black background. With fittings for mounting to pipe post. Orders should specify numeral desired and size of pipe post so proper mounting fittings will be furnished	D66379-2	A to Ca, E to Eg, G to Gg
4a	UO387112	Tracks Sign Complete. Reflex-reflecting letters on black background. Without mounting fittings; for use with mounting strap Ref. 22 for attaching sign to cantilever. Orders should specify numeral desired . .	D66379-2	F to Fg
5	UJ791603	. Set of Railroad Crossing signs. Black letters on white reflex-reflecting background	D66380-5	2
6	UJ791767	. Stop On Red Signal sign. Reflex-reflecting letters on black background	D66380-9	3, 3a
7	UJ791615	. Tracks Sign. Reflex-reflecting letters on black background	D66380-6	4, 4a
8	UJ791605	. Numeral Sign, 2	D66380-6	4, 4a
8a	UJ791606	. Numeral Sign, 3	D66380-6	4, 4a
8b	UJ791607	. Numeral Sign, 4	D66380-6	4, 4a
8c	UJ791608	. Numeral Sign, 5	D66380-6	4, 4a
8d	UJ791609	. Numeral Sign, 6	D66380-6	4, 4a
8e	UJ791610	. Numeral Sign, 7	D66380-6	4, 4a
8f	UJ791611	. Numeral Sign, 8	D66380-6	4, 4a

REF.	PIECE	DESCRIPTION	DRAWING	USED ON
8g	UJ791612	. Numeral Sign, 9	D66380-6	4, 4a
8h	UJ791613	. Numeral Sign, 10	D66380-6	4, 4a
8j	UJ791614	. Numeral Sign, 12	D66380-6	4, 4a
		NOTE: Refs. 8 to 8j inclusive have reflex-reflecting numbers on black background		
9	UJ46703	. Bolt, 5/8" - 11 x 3-1/4" sq. hd. steel (Cad. Pl.)		2
10	UM41375	. Washer	7826-98	2 to 4a inc.
11	UJ48020	. Hex. Nut, 5/8" - 11 steel (Cad. Pl.)		2 to 4a inc.
12	UJ46696	. Bolt, 5/8" - 11 x 1-3/4" sq. hd. steel (Cad. Pl.)		3, 3a, 4, 4a
13	UM381093	. Brace	D66380-1	3, 3a
14	UM381094	. Brace	D66380-1	4, 4a
15	UJ52656	. Screw, No. 10 x 3/8" rd. hd. sheet metal (Cad. Pl)		4, 4a
16	UN373333	. Mounting Fittings for 4" pipe post	D66379-1	2, 3, 4
16a	UN373334	. Mounting Fittings for 5" pipe post	D66379-1	2, 3, 4
16b	UN373335	. Mounting Fittings for 6" pipe post	D66379-1	2, 3, 4
16c	UN373336	. Mounting Fittings for 7" pipe post	D66379-1	2, 3, 4
16d	UJ373337	. Mounting Fittings for 8" pipe post	D66379-1	2, 3, 4
17	UM172193	. . U-Bolt for 4" pipe post	8782-108	16
17a	UM183844	. . U-Bolt for 5" pipe post	8782-195	16a
17b	UM215790	. . U-Bolt for 6" pipe post	8782-175	16b
17c	UN267637	. . U-Bolt for 7" pipe post	8782-237	16c
17d	UN215089	. . U-Bolt for 8" pipe post	8782-219	16d
18	UJ48013	. . Hex. Nut, 1/2" steel (Cad. Pl.)		16 to 16d inc.
19	UJ47503	. . Washer, 1/2" steel plate (Cad. Pl.)		16 to 16d inc.
20	UM180354	. . Adapter Clamp	C9361-19	16 to 16d inc.
21	UN387115	Mounting Strap Complete with bolts and nuts. For attaching Stop On Red Signal sign to cantilever (Not shown)	10914-1060	F to Fg
22	UN387114	Mounting Strap Complete with bolts and nuts. For attaching Tracks sign to cantilever (Not shown)	10914-3407	F to Fg

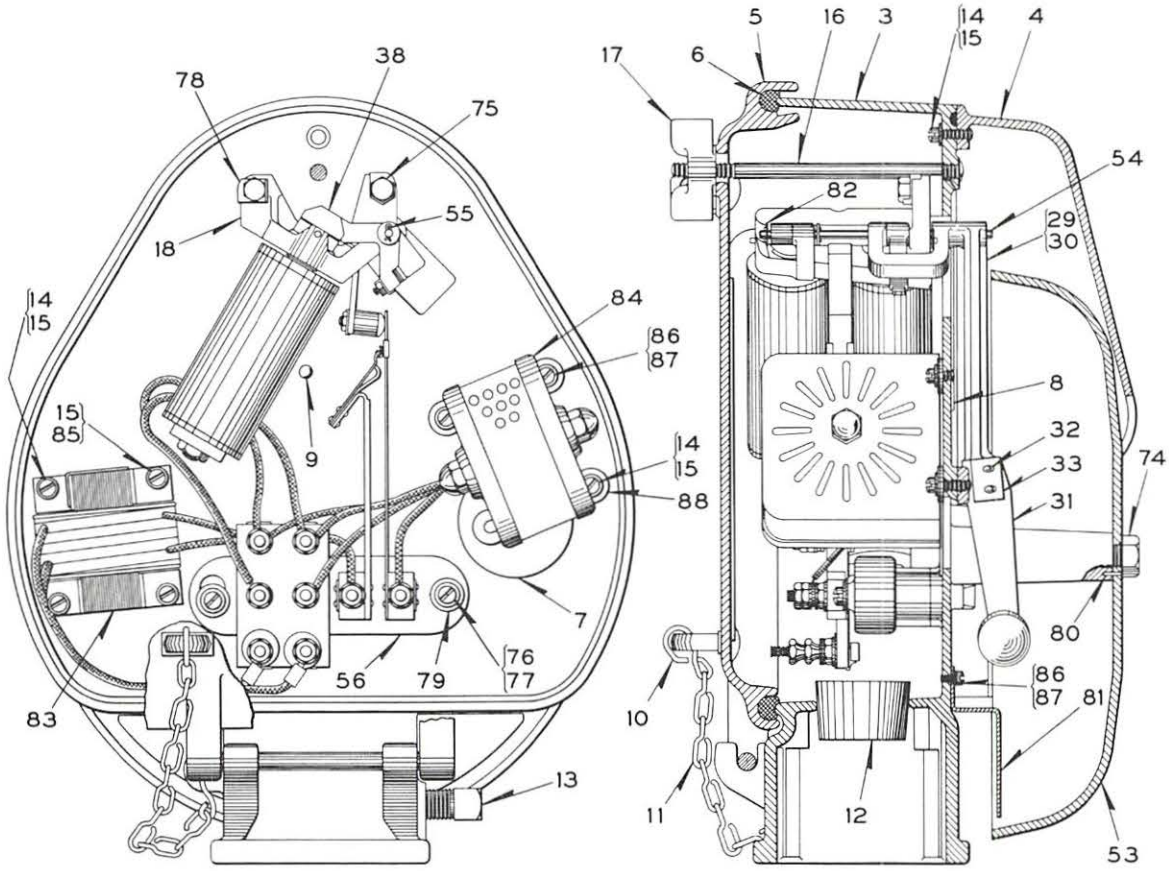

2

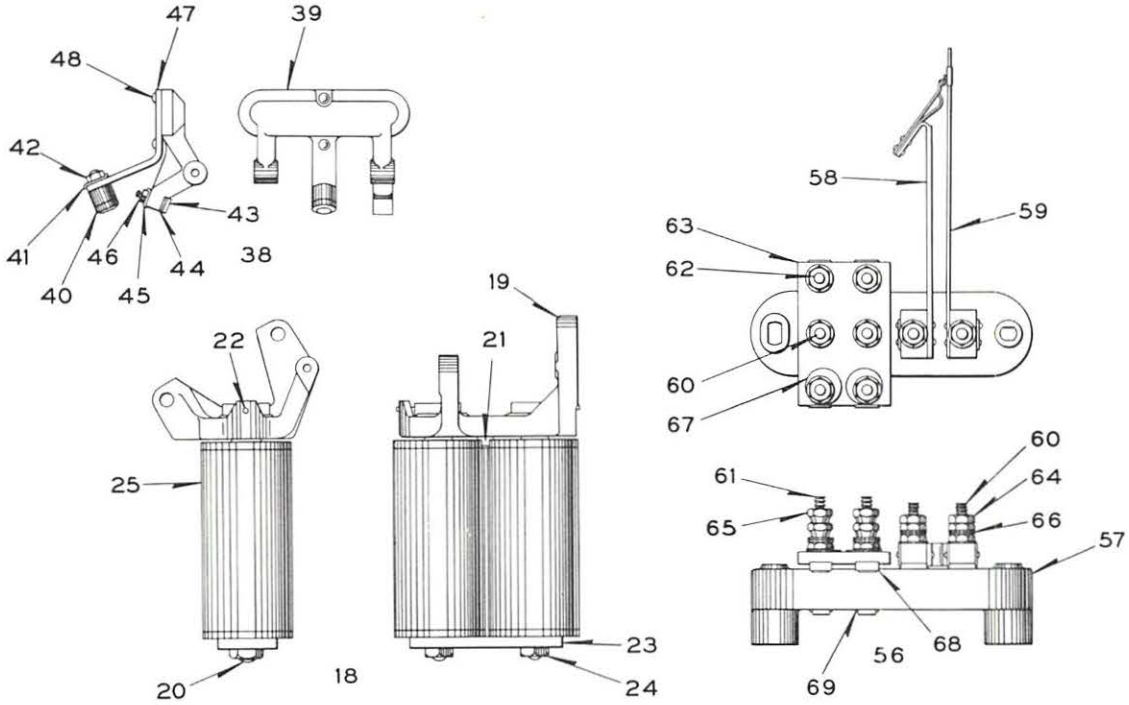

STYLE AH-10 A.C. CROSSING BELL

STYLE AH-10 A.C. CROSSING BELL FOR HIGHWAY CROSSING SIGNALS

Crossing Bell Ref. 2 does not include Socket Ref. 89.

The Style AH-10 crossing bell for A.C. operation consists essentially of the Model 15-A D.C. crossing bell modified by the addition of a small transformer and copper oxide rectifier to permit operation on alternating current. It is so designed that for 110/100 volt operation it may be used without change on power sources having a frequency of 25 to 100 cycles. The Style AH-10 bell operates at a rate of approximately 100 strokes per minute.

Indented item descriptions indicate that the references in the "Used On" column refer to this Plate, K1-1.5. All other references refer to the General Plate K1-1.

Order by Plate, Reference, Piece and Abbreviated Description

REF.	PIECE	DESCRIPTION	DRAWING	USED ON
2	UN152837	Style AH-10 A.C. Crossing Bell Complete, 110/100 volts, 25/100 cycles, (with coils 10 ohms per pair)	C8913-3	All
3	UM152707	. Case	C8808-3	2
4	UM136397	. Hood	C8808-4	2
5	UN74355	. Cover Complete	C8808-1	2
6	UA67069	. . Gasket (Order should specify length desired)		5
7	UM61362	. Shield	C8808-2	2
8	UM61363	. Shield	C8808-2	2
9	UJ49827	. Rivet	10301-50	2
10	UJ56179	. Hook, No. 1S steel (Cad. Pl.)		2
11	UJ61109	. No. 8, 6 Link Single Jack Chain (Cad. Pl.)		2
12	UM61928	. Wire Guide	C7330-1	2
13	UJ50598	. Set Screw, 5/8" - 11 x 1" cup point iron (Cad. Pl.)		2
14	UJ52202	. Machine Screw, 1/4" - 20 x 7/8" fil. hd. steel (Tin. Pl.)		2
15	UJ47775	. Lock Washer, 1/4" plain steel (Tin Pl.)		2
16	UM61403	. Stud	8114-225	2
17	UM111526	. Wing Nut	8331-65	2
18	UN70234	. Magnet Bracket Assembly with Coils (Coils 10 ohms per pair)	B12438-33	2
19	UN97308-001	. . Magnet Bracket Assembly (Without coils)	B12438-33	18
19a	UM61376-001	. . . Magnet Bracket only	8075-199	19
20	UM61378	. . . Core	8101-231	19
21	UM61375	. . . Stud	8750-1769	19
22	UM37163	. . . Pin	8097-279	19
23	UM61374	. . . Back Strap	8162-174	19
24	UM51610	. . . Nut	8265-161	19
25	UN74446	. . Coil, 5 Ohms	8133-312	18
29	UN70198	. Clapper Arm Complete	C8808-2	2

REF.	PIECE	DESCRIPTION	DRAWING	USED ON
30	UM61359	. . Clapper Arm Only	C8808-2	29
31	UN74364	. . Clapper	C8808-2	29
32	UJ49434	. . Rivet, 3/16" x 3/4" rd. hd. iron		29
33	UM61379	. . Washer	7826-202	29
38	UN97406	. Armature Complete	C8808-2	2
39	UM61377	. . Armature Only	8157-256	38
40	UJ78039	. . Bushing	8095-527	38
41	UM79652	. . Nut Lock	8486-102	38
42	UM1515	. . Nut	8109-23	38
43	UM62306	. . Stud	8098-1200	38
44	UM62307	. . Washer	8486-197	38
45	UM62309	. . Nut Lock	8486-197	38
46	UM73494	. . Nut	8265-126	38
47	UM61360	. . Operating Arm	C8808-2	38
48	UJ49404	. . Rivet, 1/4" x 1/2" rd. hd. iron		38
53	UM63312	. Gong	B8379-4	2
54	UM61700	. Shaft	8097-719	2
55	UJ48601	. Cotter Pin, 1/16" x 3/8" steel (Tin Pl.)		2
56	UN152699	. Terminal Board with Contact Springs	9968-886	2
57	UM81427	. . Terminal Board Only	9968-381	56
58	UN153127	. . Contact Spring	8385-2173	56
59	UN153368	. . Contact Spring	8385-2172	56
60	UM113978	. . Binding Post	8094-1192	56
61	UM199852	. . Binding Post	8094-2207	56
62	UM122489	. . Binding Post	8094-1192	56
63	UM152698	. . Terminal Board	9968-887	56
64	UM29103	. . Nut	8109-194	56
65	UM29101	. . Nut	8109-193	56
66	UJ47818	. . Washer	7828-139	56
67	UJ75510-0005	. . Tag (Lettered A.C.)	8988-75	56
68	UM186420	. . Lock Washer	8486-362	56
69	UM188259	. . Lock Washer	8486-810	56
74	UM40372	. Screw	C7377-2	2
75	UJ50037	. Cap Screw, 5/16" - 18 x 7/8" hex. hd. steel (Cad. Pl.)		2
76	UJ522076	. Machine Screw, 1/4" - 20 x 2-1/4" fil. hd. steel (Tin Pl.)		2
77	UM73099	. Washer (Tin. Pl.)	7826-66	2

REF.	PIECE	DESCRIPTION	DRAWING	USED ON
78	UM21439	. Lock Washer	8486-70	2
79	UJ47034	. Washer (Leather)	8078-422	2
80	UM43654	. Pin	8097-448	2
81	UM180652	. Shield	10914-489	2
82	UM53	. Washer	7828-5	2
83	UN152621	. Style N2 Transformer, 110/100 Volts, 25/100 Cycles	C8605-17	2
84	UN152477	. Style R-27 Rectifier, Input 10 Volts, 25 to 100 Cycles A.C., Output 6 Volts D.C., 0.6 Amp.	C9135-26	2
85	UJ52200	. Machine Screw, 1/4" - 20 x 1/2" fil. hd. steel (Tin Pl.)		2
86	UJ522019	. Machine Screw, No. 10-32 x 3/8" fil. hd. steel (Tin Pl.)		2
87	UJ47733	. Lock Washer, No. 10 plain steel (Tin Pl.)		2
88	UM50682	. Washer	7826-117	2
89	UN82254	Socket Complete (For mounting Bell on 4" pipe post) (Not shown)	C6041-10	A to Da

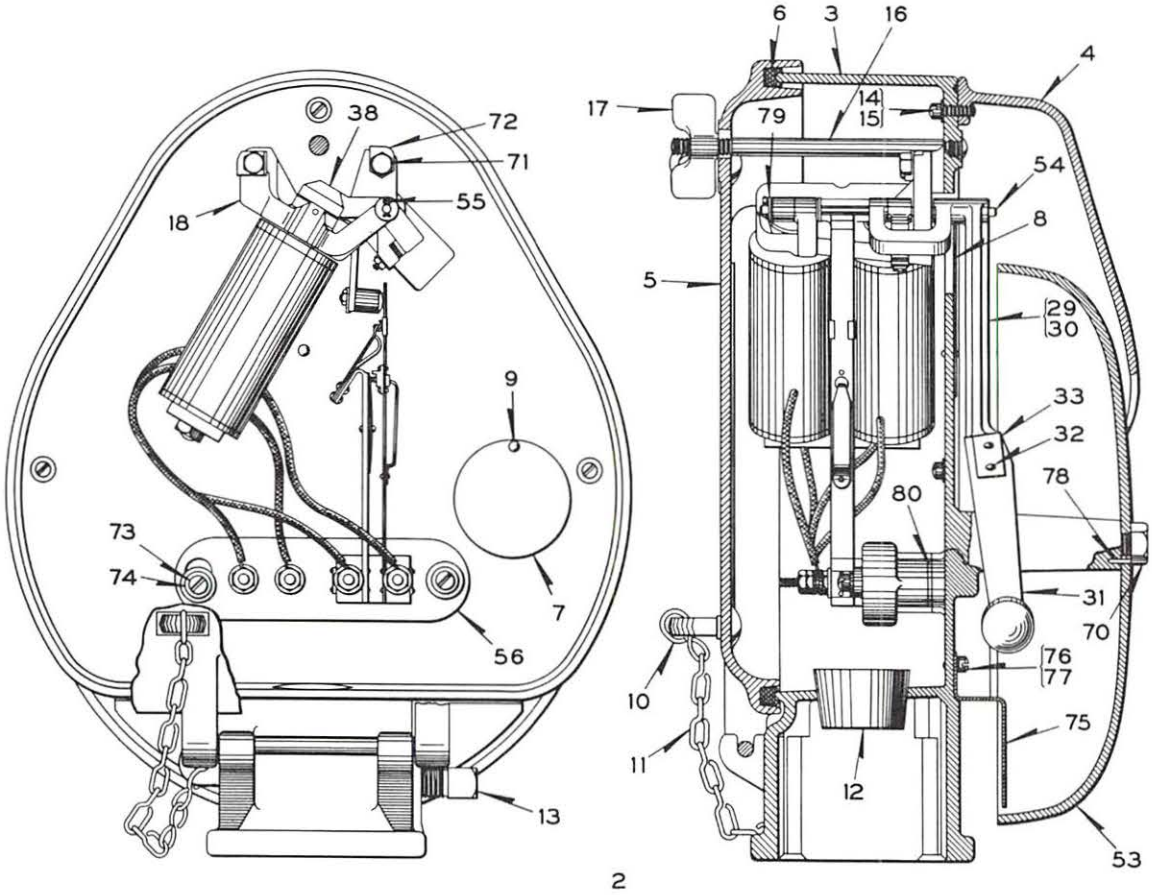

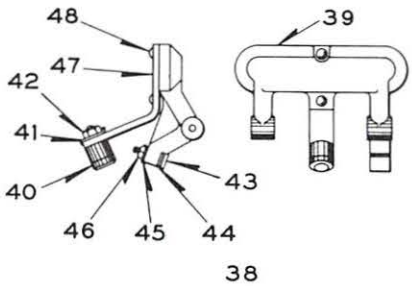

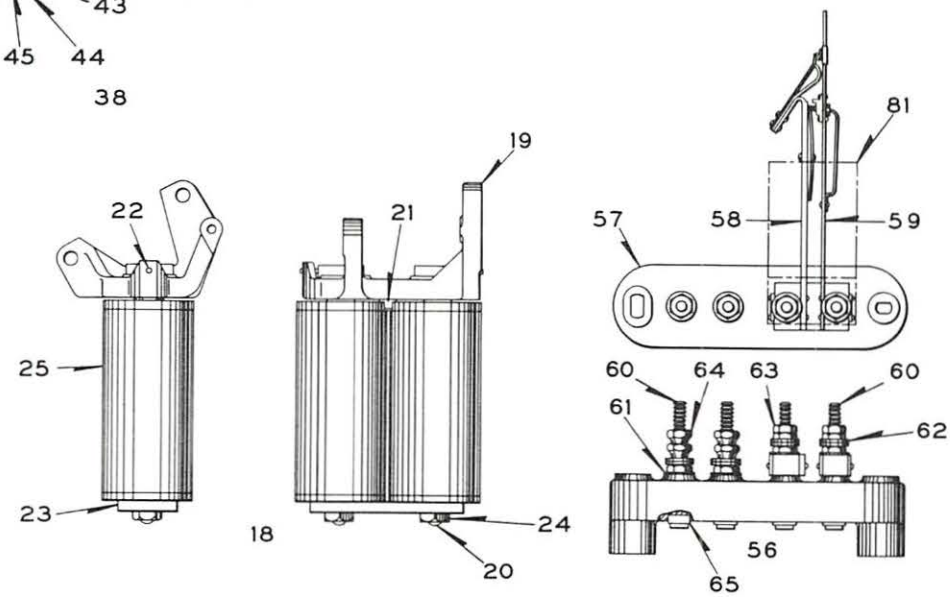

MODEL 15A D. C. CROSSING BELL

MODEL 15-A D.C. CROSSING BELL FOR HIGHWAY CROSSING SIGNALS

Crossing Bells shown on this catalog plate do not include Socket Ref. 82.

Indented item descriptions indicate that the references in the "Used On" column refer to this Plate, K1-1.6. Crossing Bells are applicable to all signals listed on Plate K1-1.

Order by Plate, Reference, Piece and Abbreviated Description

Model 15-A D.C. Crossing Bell, Complete

Ref.	Piece	Operating Voltage	Resistance Per Pair of Coils	Drawing
2	UN86181	8-Volts	20-Ohms	C8807-1
2a	UN74357	10-Volts	31-Ohms	C8807-1
*2b	UN171021	10-Volts	31-Ohms	C8807-1
2c	UN79654	220-Volts	5000-Ohms	C8807-1

* Equipped with Capacitor for Radio interference elimination

REF.	PIECE	DESCRIPTION	DRAWING	USED ON
3	UM136396	. Case	C8808-3	2 thru 2c
4	UM136397	. Hood	C8808-4	2 thru 2c
5	UM74355	. Cover Complete	C8808-1	2 thru 2c
6	UA67069	. . Gasket (Order should specify length desired)		5
7	UM61362	. Shield	C8808-2	2 thru 2c
8	UM61363	. Shield	C8808-2	2 thru 2c
9	UJ49827	. Rivet	10301-50	2 thru 2c
10	UJ56179	. No. 1S Hook, steel (Cad. Pl.)		2 thru 2c
11	UA61109	. No. 8, 6 Link Single Jack Chain (Cad. Pl.)		2 thru 2c
12	UM61928	. Wire Guide	C73301-1	2 thru 2c
13	UJ50598	. Set Screw, 5/8" - 11 x 1" cup point iron (Cad. Pl.)		2 thru 2c
14	UJ52202	. Machine Screw, 1/4" - 20 x 7/8" fil. hd. steel (Tin Pl.)		2a thru 2c
15	UJ47775	. Lock Washer, 1/4" plain steel (Tin Pl.)		2a thru 2c
16	UM61403	. Stud	8114-225	2a thru 2c
17	UM111526	. Wing Nut	8331-65	2a thru 2c
18	UN86180	. Magnet Bracket Assembly with Coils (Coils 20 Ohms Per Pair)	B12438-33	2
18a	UN74363	. Magnet Bracket Assembly with Coils (Coils 31 Ohms Per Pair	B12438-33	2a, 2b

REF.	PIECE	DESCRIPTION	DRAWING	USED ON
18b	UN79655	Magnet Bracket Assembly with Coils (Coils 5000 Ohms Per Pair)	B12438-33	2c
19	UN97308-001	. . Magnet Bracket Assembly (Without Coils)	B12438-33	18
19a	UM61376-001	. . . Magnet Bracket Only	8075-199	19
20	UM61378	. . . Core	8101-231	19
21	UM61375	. . . Stud	8750-1769	19
22	UM37163	. . . Pin	8097-279	19
23	UM61374	. . . Back Strap	8162-174	19
24	UM51610	. . . Nut	8265-161	19
25	UN86177	. . Coil, 10 Ohms	8133-312	18
25a	UN74358	. . Coil, 15.5 Ohms	8133-312	18a
25b	UN79656	. . Coil, 2500 Ohms	8133-312	18b
29	UN70198	. Clapper Arm Complete	C8808-2	2a thru 2c
30	UM61359	. . Clapper Arm only	C8808-2	29
31	UN74364	. . Clapper	C8808-2	29
32	UJ49434	. . Rivet, 3/16" x 3/4" rd. hd. iron		29
33	UM61379	. . Washer	7826-202	29
38	UN97406	. Armature Complete	C8808-2	2a thru 2c
39	UM61377	. . Armature Only	8157-256	38
40	UJ78039	. . Bushing	8095-527	38
41	UM79652	. . Nut Lock	8486-102	38
42	UM1515	. . Nut	8109-23	38
43	UM62306	. . Stud	8098-1200	38
44	UM62307	. . Washer	8486-197	38
45	UM62309	. . Nut Lock	8486-197	38
46	UM73494	. . Nut	8265-126	38
47	UM61360	. . Operating Arm	C8808-2	38
48	UJ49409	. . Rivet, 1/8" x 1/2" rd. hd. iron		38
53	UM63312	. Gong	B8379-4	2a thru 2c
54	UM61700	. Shaft	8097-719	2a thru 2c
55	UJ48601	. Cotter Pin, 1/16" x 3/8" steel (Tin Pl.)		2a thru 2c
56	UN70235	. Terminal Board with Contact Springs	9968-384	2a thru 2c
57	UM81427	. . Terminal Board Only	9968-381	56
58	UN74362	. . Contact Spring	8385-1529	56
59	UN131429	. . Contact Spring	8385-1530	56
60	UM118271	. . Binding Post	8094-1192	56
61	UM29104	. . Washer	7828-138	56

REF.	PIECE	DESCRIPTION	DRAWING	USED ON
62	UJ47818	. . Washer	7828-139	56
63	UM29103	. . Nut	8109-194	56
64	UM29101	. . Nut	8109-193	56
65	UM188259	. . Lock Washer	8486-310	56
70	UM40372	. Screw	C7377-2	2a thru 2c
71	UJ50037	. Cap Screw, 5/16" - 18 x 7/8" hex. hd. steel (Cad. Pl.)		2a thru 2c
72	UM21439	. Lock Washer	8486-70	2a thru 2c
73	UJ522076	. Machine Screw, 1/4" - 20 x 2-1/4" fil. hd. steel (Tin Pl.)		2a thru 2c
74	UM73099	. Washer (Tin Pl.)	7826-66	2a thru 2c
75	UM180652	. Shield	10914-498	2a thru 2c
76	UJ522019	. Machine Screw, No. 10-32 x 3/8" fil. hd. steel (Tin Pl.)		2a thru 2c
77	UJ47733	. Lock Washer, No. 10 plain steel		2a thru 2c
78	UM43654	. Pin	8097-448	2a thru 2c
79	UM53	. Washer	7828-5	2a thru 2c
80	UM170935	. Washer (cork)	8078-1499	2a thru 2c
81	UN190169	. Capacitor	B12549-29	2b
82	UN82254	Socket Complete (For mounting Bell on 4" pipe post) (Not shown)	C6041-10	2 thru 2c

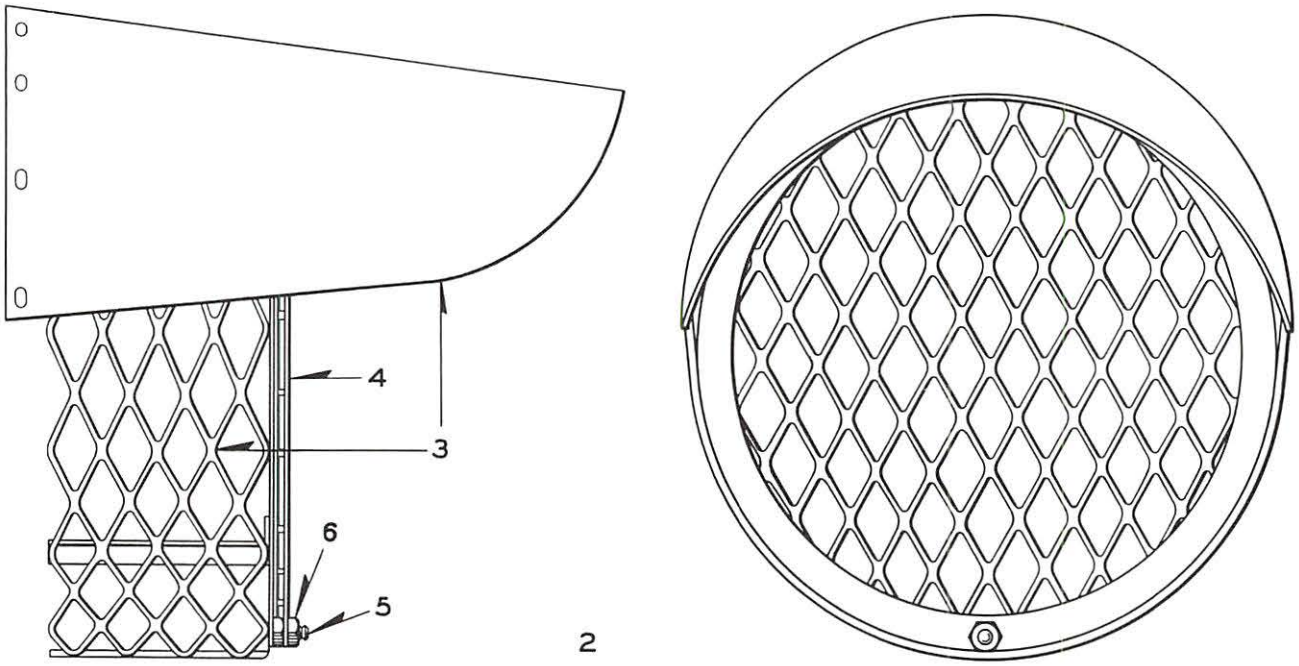

COVER GLASS GUARD FOR HC-81 LAMP UNIT

COVER GLASS GUARD
FOR HC-81 LAMP UNIT

Indented item descriptions indicate that the references in the "Used On" column refer to this Plate, K1-1.7. All other references refer to the General Plate K1-1.

Order by Plate, Reference, Piece and Abbreviated Description

REF.	PIECE	DESCRIPTION	DRAWING	USED ON
2	UN189844	Cover Glass Guard and Hood Complete with Side and Front Screens	C8964-108	All
3	UN189755	. Cover Glass Guard and Hood Complete with Side Screen (Without Front Screen)	C8964-108	2
4	UN106093	. Front Screen Complete	C8901-125	2
5	UJ51341	. Machine Screw, No. 14-24 x 5/8" fil. hd. br. (N. P.)		2
6	UM29103	. Nut	8109-194	2

STYLE HM SHEET STEEL INSTRUMENT HOUSE

The UNION Style HM Instrument House has been designed with primary consideration given to modular construction, improved lifting facilities and flexibility of interior arrangements. This sheet steel instrument house, shown in Figure 1, has a striking external appearance which is in keeping with modern industrial design. Roof and side sheets have formed slip-joints, and corners are rounded. The side sheets are X-creased to provide additional rigidity. Hinges are abutted to the door flap and to the face of the house casing and are concealed when the doors are closed. The doors contain adjustable, style-rounded louvers, three of which are located at the bottom of each door and three at the top. All instrument houses are painted aluminum on the exterior and grey enamel on the interior.

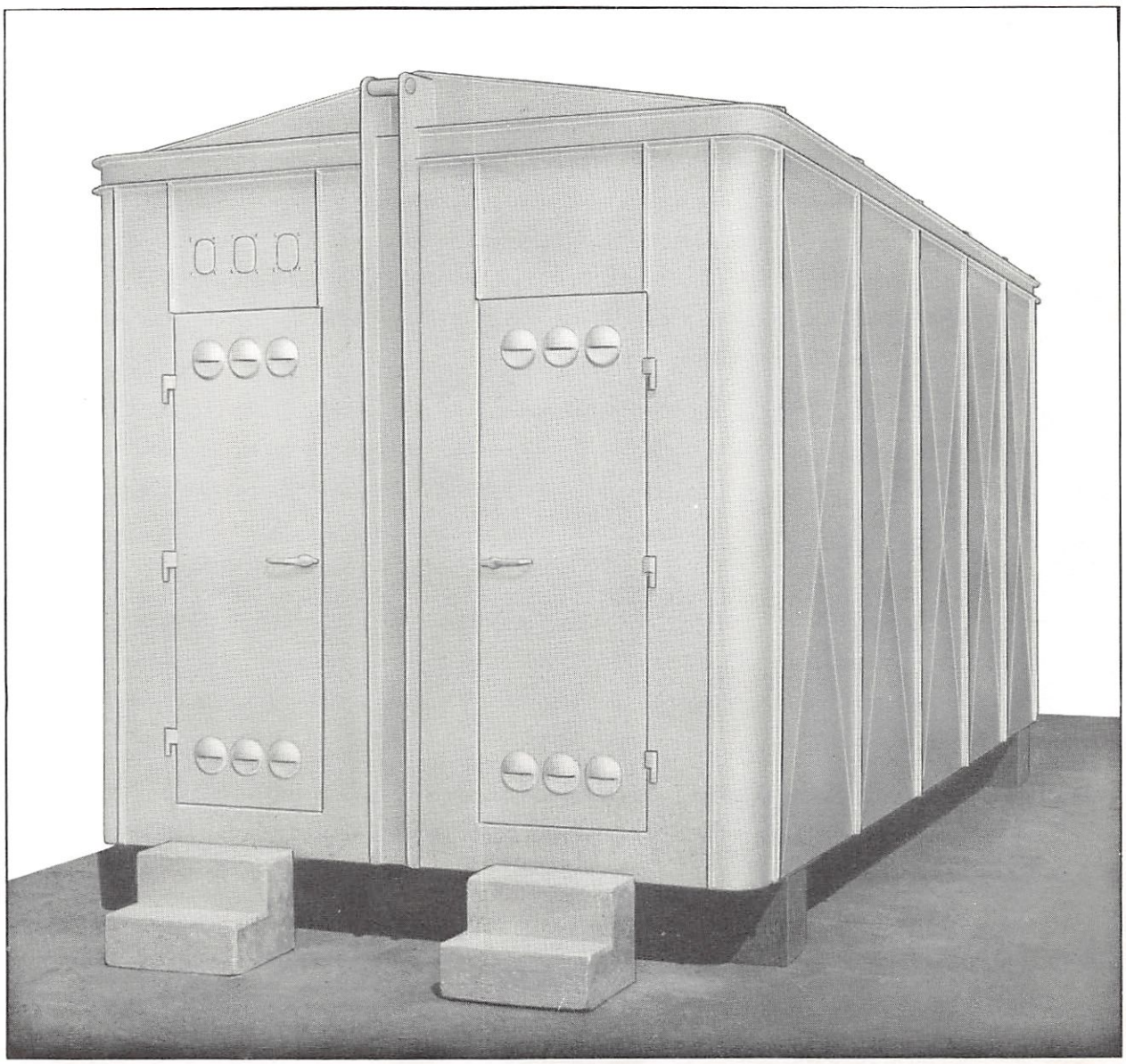

Figure 1 . . . Style HM Instrument House

APPLICATION

This instrument house is ideal for housing batteries, shelf-mounted equipment and plug-in equipment that is located at power operated wayside switches. Its sealed construction offers maximum protection against weather and dust intrusion.

The UNION Style HM Instrument House is provided in two widths -- 6' 6" and 8' 6". All houses are 9' 2-1/4" in height. The inside clear height is 7' 5-5/8". There are four standard sizes as follows: 6' 6" x 5' 8"; 6' 6" x 8' 4"; 6' 6" x 12' 0" and 8' 6" x 12' 0".

In addition, extended lengths of 15' 8" and 19' 4" may be ordered in the 8' 6" width when desired. It will be noted that lengths are varied in 3' 8" (44") modules. Modular construction permits the stocking of many of the details such as side sheets and roof panels, which are applicable to any length of house, in order to speed deliveries.

CONSTRUCTION

The rugged, steel-sheet construction affords a minimum of maintenance. Railway signaling equipment and apparatus are offered maximum protection from exposure to the elements. The formed slip-joints are dust-tight. Adjustable screened louvers, provided in the doors, may be opened for ventilation when desired. Adjustable screened ventilator openings are located at both ends of the roof beam. The HM Instrument House is portable and may be moved to selected sites with relative ease. Lifting is accomplished without the use of spreader bars by utilizing built-in lifting pins in the top of pilasters located at each end of the house. The stresses and strains encountered in lifting and loading are taken up, not by the skin, but by the sturdy pilasters and structural members of the roof and base.

Inside the house, the main roof beam is open from end to end serving to aid ventilation. To provide for various shelf arrangements, this HM house is fitted with notched angles at top and bottom, permitting vertical shelf supports to be shifted horizontally in 2" increments. These supports are arranged to permit shelves and tag boards to be adjusted vertically in 3" increments. Details of the interior construction are shown in Figures 2 and 3.

Knockout cable outlets are provided in the end wall above each door and in the floor. Cable outlet castings are available for assembly in the knockouts. An integral floor beam eliminates the need for additional individual reinforcing members beneath the floors. The bottom of the floor is coated with asbestos filled asphaltic mastic.

If desired, the interior of the HM Instrument House may be lined with insulation. The insulation sections are easily placed behind the notched angles found at the top and bottom of each house panel. The insulation is cemented to the doors and is placed flat between the roof trusses.

Each instrument house has provision for shelving, tag boards and wire troughs on the left and right sides. The 6' 6" x 8' 4" and 6' 6" x 12' 0" houses also have provisions for four rows of shelving across the back of each house. In the 8' 6" wide houses, two tiers of shelving may be provided through the centers. Provision also has been made in each house for convenient installation of hinged or fixed universal racks 20" and 31" wide in place of sections of shelving.

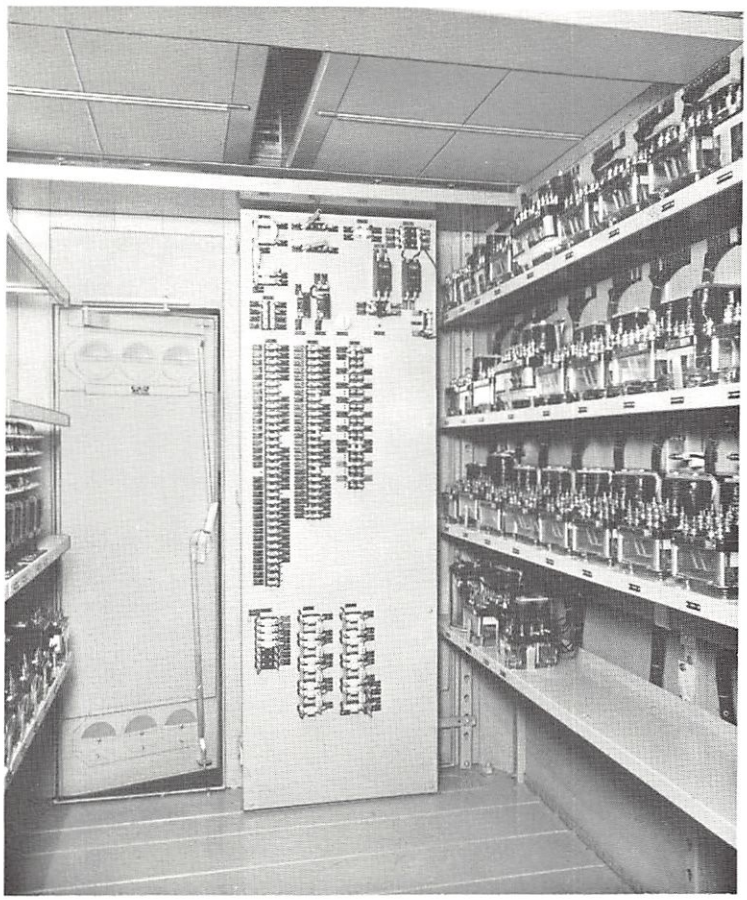

Figure 2 . . . Interior View of Style HM Instrument House

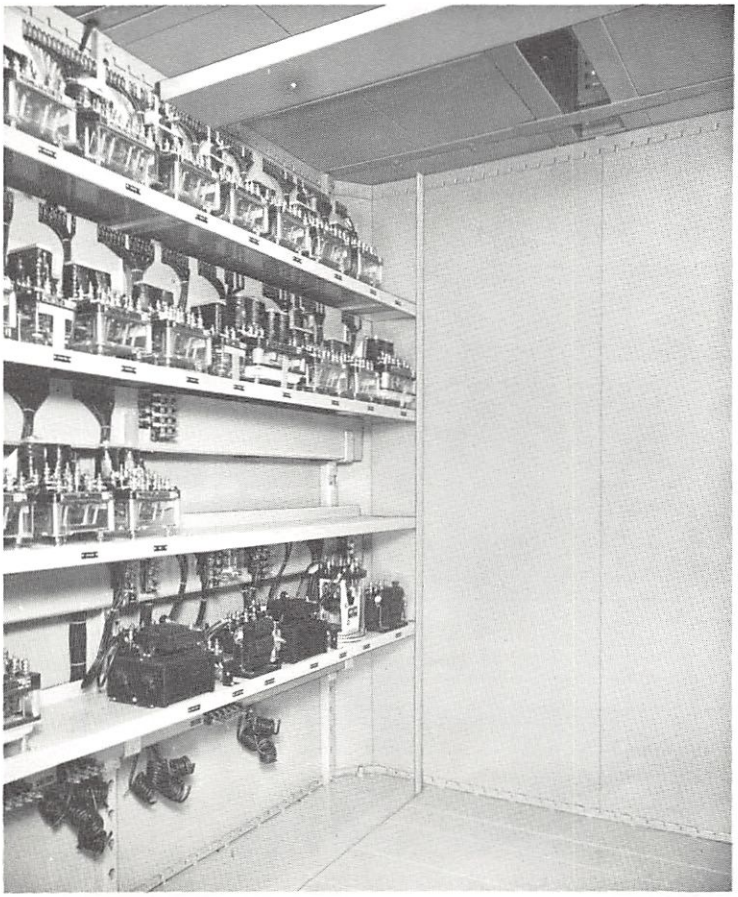

Figure 3 . . . Details of Relay Mounting, Tag-Boards and Wire Troughs

FOUNDATIONS

Arrangements have been included in the new HM Instrument House for mounting on concrete or cast-iron piers. See Catalog Section "P" for detailed ordering references on cast-iron piers. Models of this instrument house were thoroughly load-tested to assure that the design meets the severe requirements encountered in service. Results of "weight-lift" tests of the models give ample proof that the HM Instrument House can withstand the severe stresses and strains to which it is subjected when being lifted for shipment and installation. This rigid construction also permits supporting the HM House at the corners, thereby minimizing foundation requirements when mounted on concrete.

The house is secured to concrete foundations by means of bolts which protrude from each foundation and pass through the corner plates, sleeves and mounting plates located in the four corners of the steel structure. The foundation bolt-nuts are tightened from inside the house.

For mounting on cast-iron piers, the base channel is drilled to receive bolted-on short channels. These in turn are to be bolted to the cast-iron piers. On houses 12' or longer, three sets of cast-iron piers including short channels are recommended to distribute load of the house more evenly over this type of pier.

WEIGHT INFORMATION

6' 6" x 5' 8" house (empty) = 1,900 lbs. approximately.
6' 6" x 8' 4" house (empty) = 2,200 lbs. approximately.
6' 6" x 12' 0" house (empty) = 2,500 lbs. approximately.
8' 6" x 12' 0" house (empty) = 2,850 lbs. approximately.

UNIVERSAL RACKS FOR MOUNTING PLUG-IN EQUIPMENT

Universal racks (hinged or stationary) are provided in two standard sizes, 20" and 31" widths. Shown in Figures 4, 5, 6, and 7 are applications of the recommended maximum number of swinging and stationary racks that may be installed in the style HM Houses.

In ordering state size (width), location of racks and whether they should be hinged or stationary.

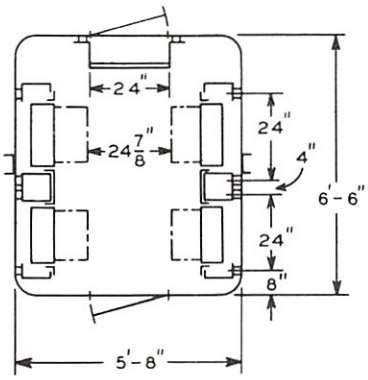

Figure 4 . . . (6' 6" x 5' 8")

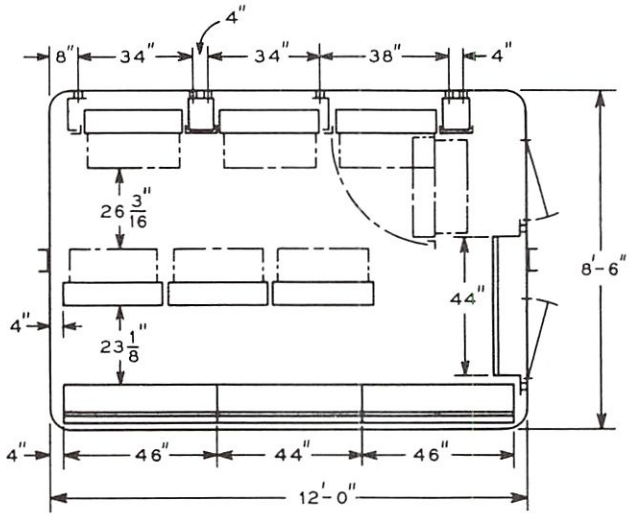

Figure 5 . . . (8' 6" x 12' 0")

Typical arrangement showing maximum number of Racks which may be installed in each size house.

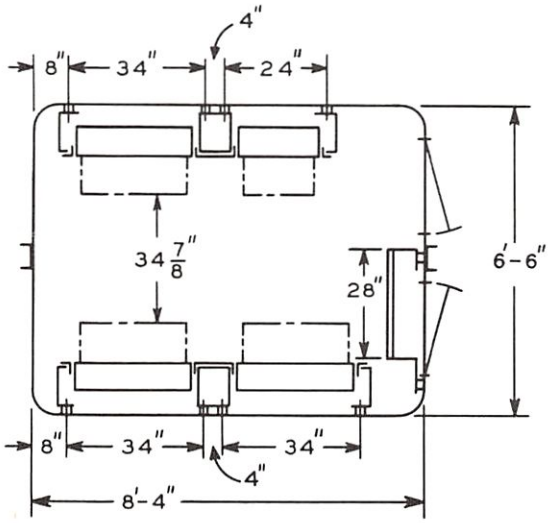

Figure 6 . . . (6' 6" x 8' 4")

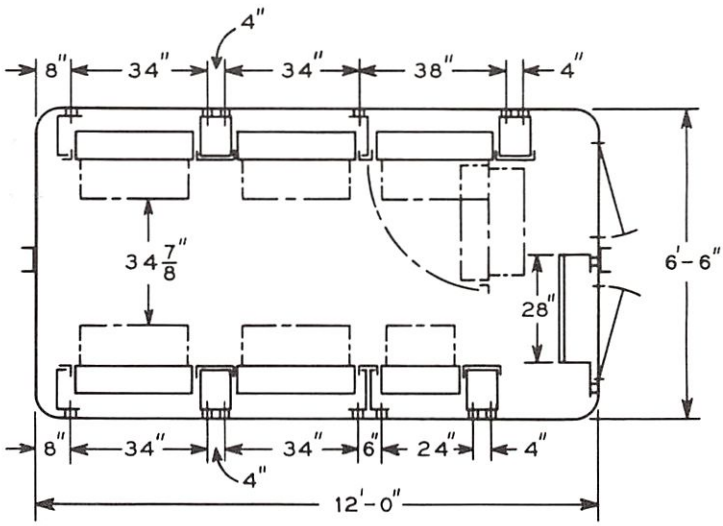

Figure 7 . . . (6' 6" x 12' 0")

Typical arrangement showing maximum number of Racks which may be installed in each size house.

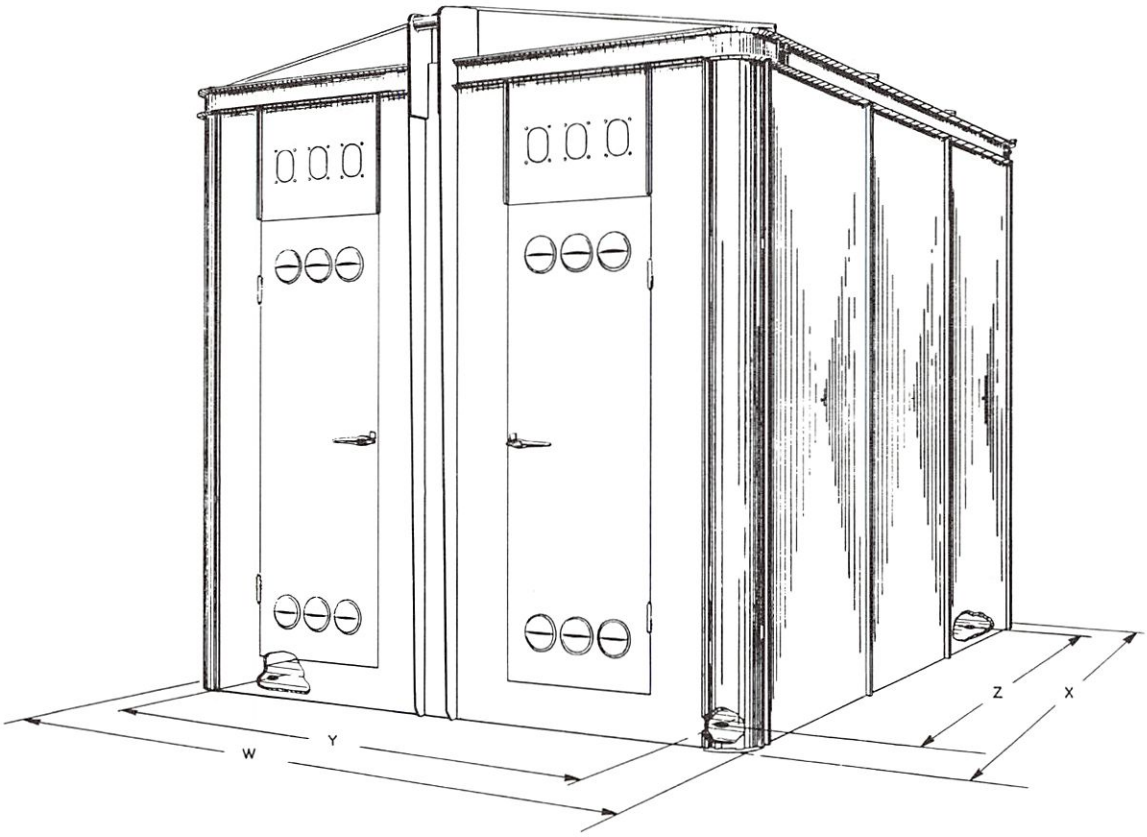

Style HM Sheet Steel Instrument House

STYLE HM SHEET STEEL INSTRUMENT HOUSE

Refer to Plates L1-1.1 thru L1-1.6 for detail parts.

The Style HM instrument houses listed below are furnished where specified with plywood terminal boards, tag boards and battery boards. Houses are furnished with lights and mastipave floor covering. Where shelving is specified, four levels are furnished on each side and for the 8' 6" width, two center tiers, each with four levels. If four levels of shelves are desired in rear of 6' 6" x 8' 4" and 6'-6" x 12' 0" size, order should so state. (Total linear feet of rear shelves is 15' 8"). Doors in 6'-6" x 5' 8" size are located one in each side. If small access door for telephone is desired in entrance door, this should be specified on order. If telephone booth is desired, order should so state.

Order by Plate, Reference, Piece and Abbreviated Description

Standard Instrument House (without lining) Complete with Shelves, Battery Boards and Terminal Board as shown on detail Plate L1-1.1

REF.	PIECE	*LINEAR FEET FOR EQUIPMENT MOUNTING	OUTSIDE DIMENSION		FOUNDATION BOLT SPACING CONCRETE		DRAWING
			W	X	Y	Z	
A	UN348620 2050	46' 8"	6' 6"	5' 8"	67-7/8"	57-7/8"	F80047-5
B	UN348623	58' 8"	6' 6"	8' 4"	67-7/8"	89-7/8"	F80047-1
C	UN348629	88' 0"	6' 6"	12' 0"	67-7/8"	133-7/8"	F80047-2
D	UN348626	166' 0"	8' 6"	12' 0"	91-7/8"	133-7/8"	F80047-4

Standard Instrument House (with lining) Complete with Shelves, Battery Boards and Terminal Board as shown on detail Plate L1-1.1

REF.	PIECE	*LINEAR FEET FOR EQUIPMENT MOUNTING	OUTSIDE DIMENSION		FOUNDATION BOLT SPACING CONCRETE		DRAWING
			W	X	Y	Z	
Aa	UN348621 2050	46' 8"	6' 6"	5' 8"	67-7/8"	57-7/8"	F80047-5
Ba	UN348624 2203	58' 8"	6' 6"	8' 4"	67-7/8"	89-7/8"	F80047-1
Ca	UN348630 3133	88' 0"	6' 6"	12' 0"	67-7/8"	133-7/8"	F80047-2
Da	UN348627 4886	166' 0"	8' 6"	12' 0"	91-7/8"	133-7/8"	F80047-4

Standard Instrument House Only, Without Shelves, Battery Boards, or Terminal Boards. (without lining)

REF.	PIECE	*LINEAR FEET FOR EQUIPMENT MOUNTING	OUTSIDE DIMENSION		FOUNDATION BOLT SPACING CONCRETE		DRAWING
			W	X	Y	Z	
Ab	UN345125-001		6' 6"	5' 8"	67-7/8"	55-7/8"	F80046-5
Bb	UN339808-001		6' 6"	8' 4"	67-7/8"	89-7/8"	F80046-1
Cb	UN339809-001		6' 6"	12' 0"	67-7/8"	133-7/8"	F80046-2
Db	UN327339-001		8' 6"	12' 0"	91-7/8"	133-7/8"	F80046-4

Standard Instrument House Only, without Shelves, Battery Boards, or Terminal Boards. (with lining)

REF.	PIECE	*LINEAR FEET FOR EQUIPMENT MOUNTING	OUTSIDE DIMENSION		FOUNDATION BOLT SPACING CONCRETE		DRAWING
			W	X	Y	Z	
Ac	UN345125-003		6' 6"	5' 8"	67-7/8"	57-7/8"	F80046-5
Bc	UN339808-003		6' 6"	8' 4"	67-7/8"	89-7/8"	F80046-1
Cc	UN339809-003		6' 6"	12' 0"	67-7/8"	133-7/8"	F80046-2
Dc	UN327339-003		8' 6"	12' 0"	91-7/8"	133-7/8"	F80046-4

* Linear Feet for Equipment Mounting is the combined length of shelves.

UNION DEVELOPMENT U.D. 284

UNION SWITCH & SIGNAL . . . SWISSVALE, PA.
DIVISION OF WESTINGHOUSE AIR BRAKE COMPANY

union style HM instrument house

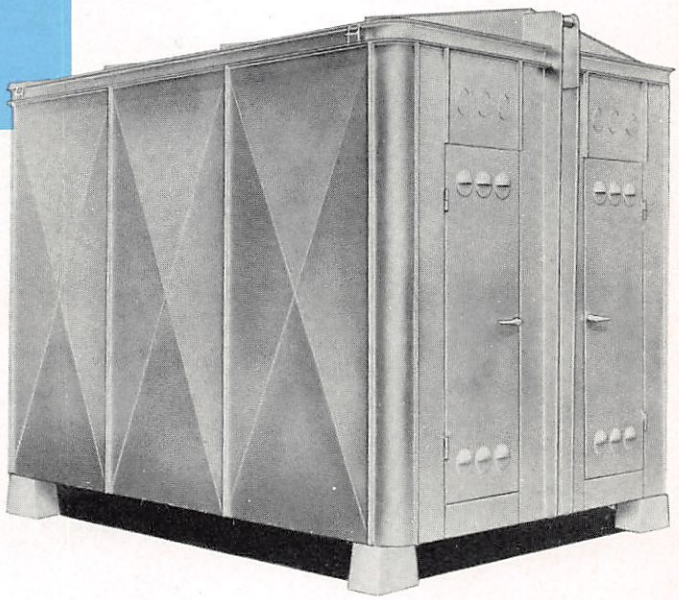

October 1958

union style

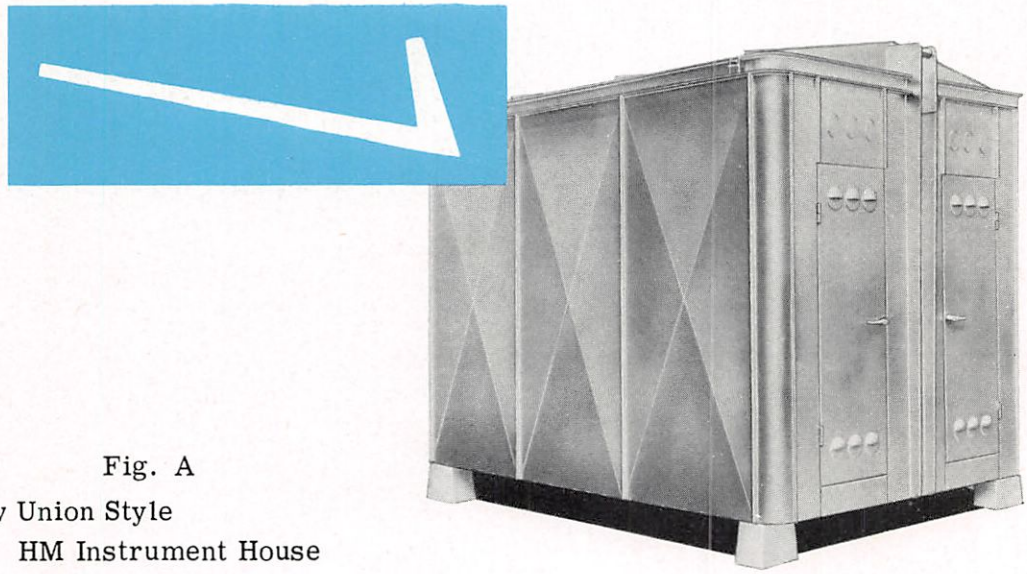

Fig. A
The new Union Style
HM Instrument House

HM instrument house

GENERAL DESCRIPTION

The UNION Style HM Instrument House has been designed with primary consideration given to the features of modular construction, improved lifting facilities and flexibility of interior arrangements. The new design of the sheet steel instrument house differs from previous models in its striking external appearance which is in keeping with modern industrial design. Roof and side sheets have formed slip-joints, and corners are rounded. The side sheets are X-creased to provide additional rigidity. Hinges are abutted to the door flap and to the face of the house casing and are concealed when the doors are closed. The doors contain adjustable-style rounded louvers, three of which are located at the bottom of each door and three at the top. All instrument houses are painted aluminum on the exterior and gray enamel on the interior.

Fig. B Interior views of 6' 6" x 8' 4" Instrument House showing shelf-mounted equipment and terminal board.

GENERAL APPLICATION

This instrument house is ideal for housing batteries, shelf-mounted equipment, and plug-in equipment such as are located at power operated wayside switches. Its sealed construction offers maximum protection against weather and dust intrusion.

SIZES

The UNION Style HM Instrument House is provided in two widths -- 6' 6" and 8' 6". All houses are 9' 2-1/4" in height. The inside clear height is 7' 5-5/8". There are four standard sizes as follows:

1. 6' 6" x 5' 8"
2. 6' 6" x 8' 4"
3. 6' 6" x 12' 0"
4. 8' 6" x 12' 0"

In addition, extended lengths of 15' 8" and 19' 4" may be ordered in the 8' 6" width when desired. With the exception of the 6' 6" x 5' 8" size house, it will be noted that lengths are varied in 3' 8" (44") modules. This modular construction permits the stocking of many of the details such as side sheets and roof panels

which are applicable to any length of house in order to speed deliveries. Detailed ordering references are provided elsewhere in this brochure.

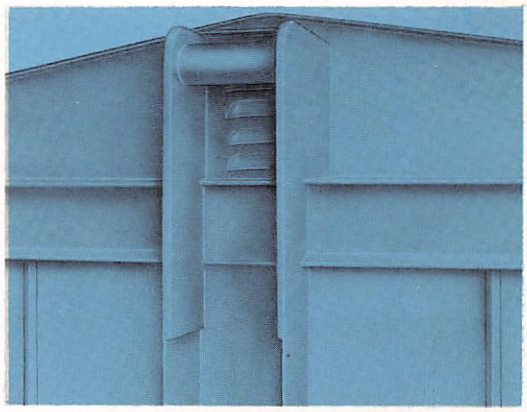

Fig. C View of built-in lifting pin.

CONSTRUCTION: EXTERIOR

The rugged, steel-sheet construction affords a minimum of maintenance. Railway signaling equipment and apparatus are offered maximum protection from exposure to the elements. The formed slip-joints are dust-tight. Adjustable screened louvers provided in the doors may be opened for ventilation purposes when desired. Adjustable screened ventilator openings are also located at both ends of the roof beam. The HM Instrument House is portable and may be moved to selected sites with relative ease. The new method of lifting offers an advantage to users since the spreader bar needed formerly to match various Style H House sizes is no longer required. Elimination of the spreader bar is accomplished by utilizing built-in lifting pins in the top of pilasters located at each end of the house. (Fig. C) Stresses and strains encountered in lifting and loading are taken up, not by the skin, but by the sturdy pilasters and structural members of the roof and base.

CONSTRUCTION: INTERIOR

Inside the house, the main roof beam is open from end to end and serves to aid ventilation. To provide for various shelf arrangements, this HM house is fitted with notched angles at top and bottom, permitting vertical shelf supports to be shifted horizontally in two-inch increments. These supports are arranged to permit shelves and tag boards to be adjusted vertically in 3" increments.

Knockout cable outlets are provided in the end wall above each door and in the floor. Cable outlet castings are available for assembly in the knockouts. An integral floor beam eliminates the need for additional individual reinforcing members beneath the floors. The bottom of the floor is coated with asbestos filled asphaltic mastic.

If desired, the interior of the HM Instrument House may be lined with insulation. The insulation sections are easily placed behind notched angles found

at the top and bottom of each house panel. The insulation is cemented to the doors and is placed flat between the roof trusses.

Each instrument house has provisions for shelving, tag boards and wire troughs on the left and right hand sides. The 6' 6" x 8' 4" and 6' 6" x 12' 0" houses also have provisions for four rows of shelving across the back of each house. (Fig. D)

In the 8' 6" wide houses, two tiers of shelving may be provided through the center. Provision also has been made in each house for convenient installation of hinged or fixed universal racks 20" and 31" wide in place of sections of shelving. (Fig. G)

Fig. D

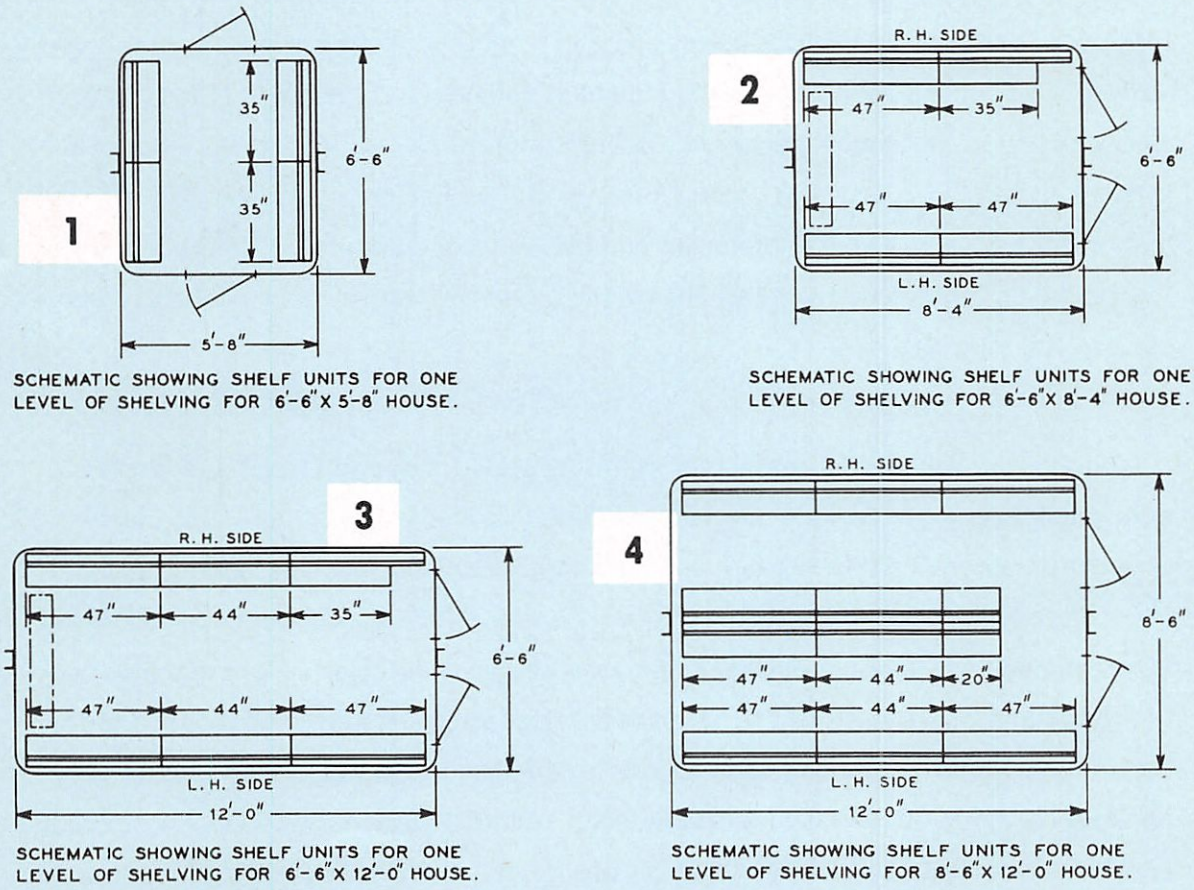

SCHEMATIC SHOWING SHELF UNITS FOR ONE LEVEL OF SHELVING FOR 6'-6" X 5'-8" HOUSE.

SCHEMATIC SHOWING SHELF UNITS FOR ONE LEVEL OF SHELVING FOR 6'-6" X 8'-4" HOUSE.

SCHEMATIC SHOWING SHELF UNITS FOR ONE LEVEL OF SHELVING FOR 6'-6" X 12'-0" HOUSE.

SCHEMATIC SHOWING SHELF UNITS FOR ONE LEVEL OF SHELVING FOR 8'-6" X 12'-0" HOUSE.

Fig. G

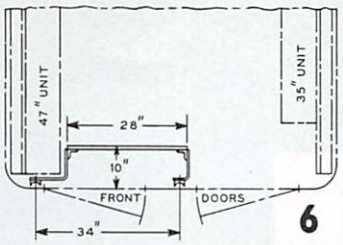

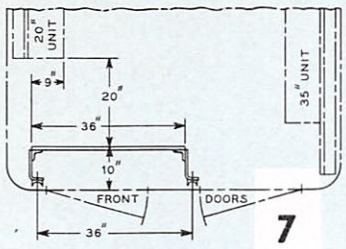

SCHEMATICS SHOWING TERMINAL BOARD FOR 6'-6" WIDE HOUSE

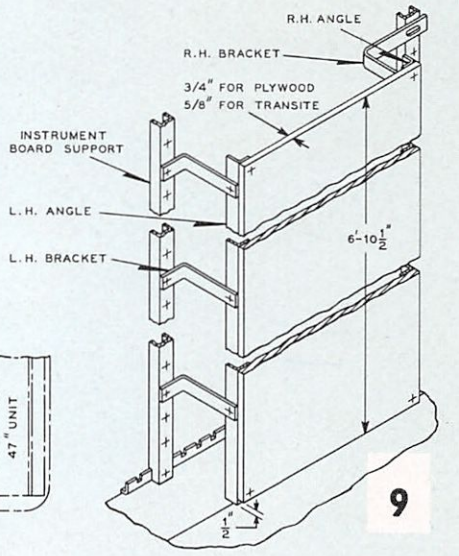

VIEW SHOWING APPLICATION OF TERMINAL BOARDS, MOUNTING ANGLES AND BRACKETS

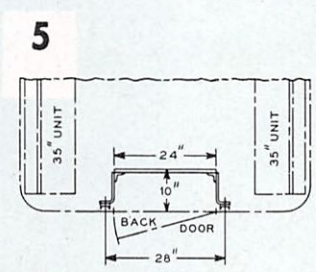

SCHEMATIC SHOWING TERMINAL BOARD FOR 5'-8" WIDE HOUSE

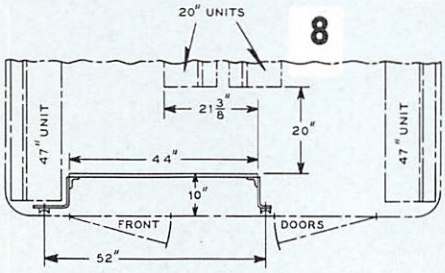

SCHEMATIC SHOWING TERMINAL BOARD FOR 8'-6" WIDE HOUSE

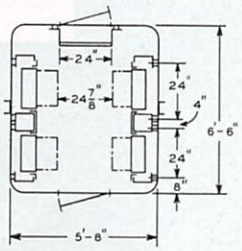

(4) 20" RACKS

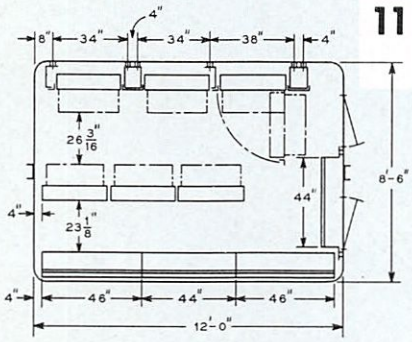

(3) 31" SWINGING RACKS ON R.H. SIDE, (3) 31" RACKS IN CENTER AND SHELVES ON L.H. SIDE.

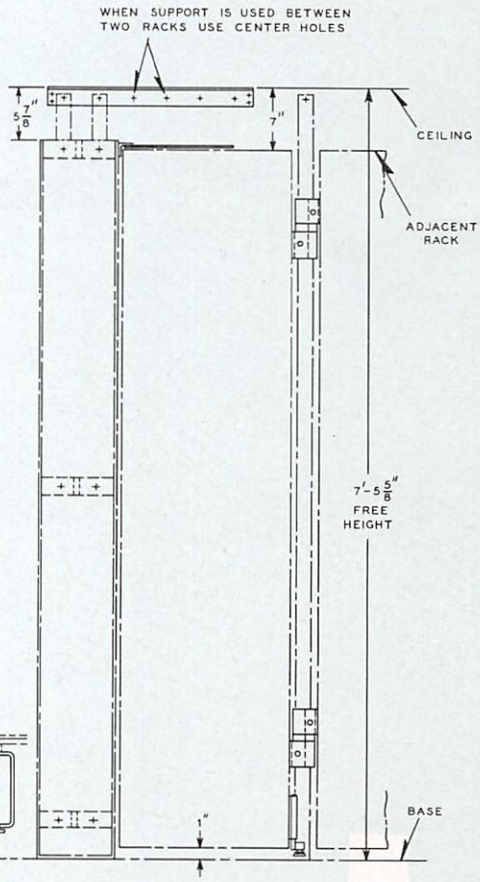

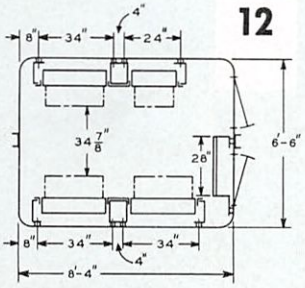

(3) 31" AND (1) 20" RACKS

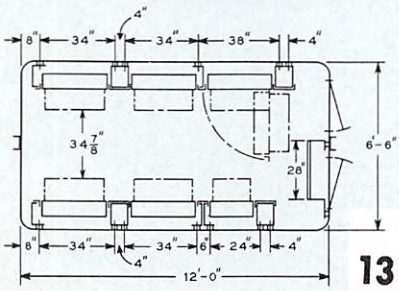

(5) 31" AND (1) 20" RACKS

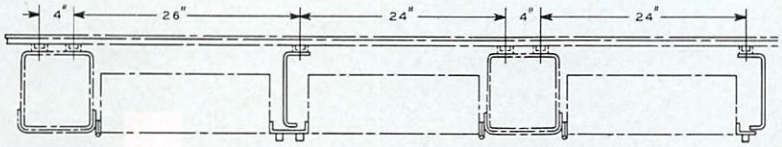

(3) 20" RACKS

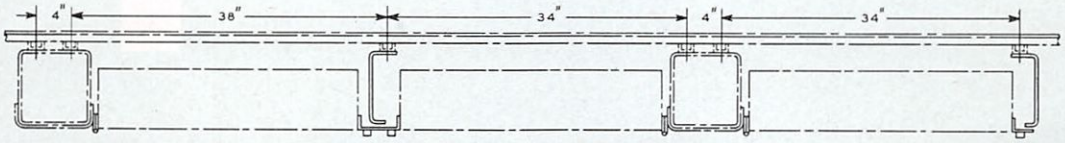

(3) 31" RACKS

Fig. H

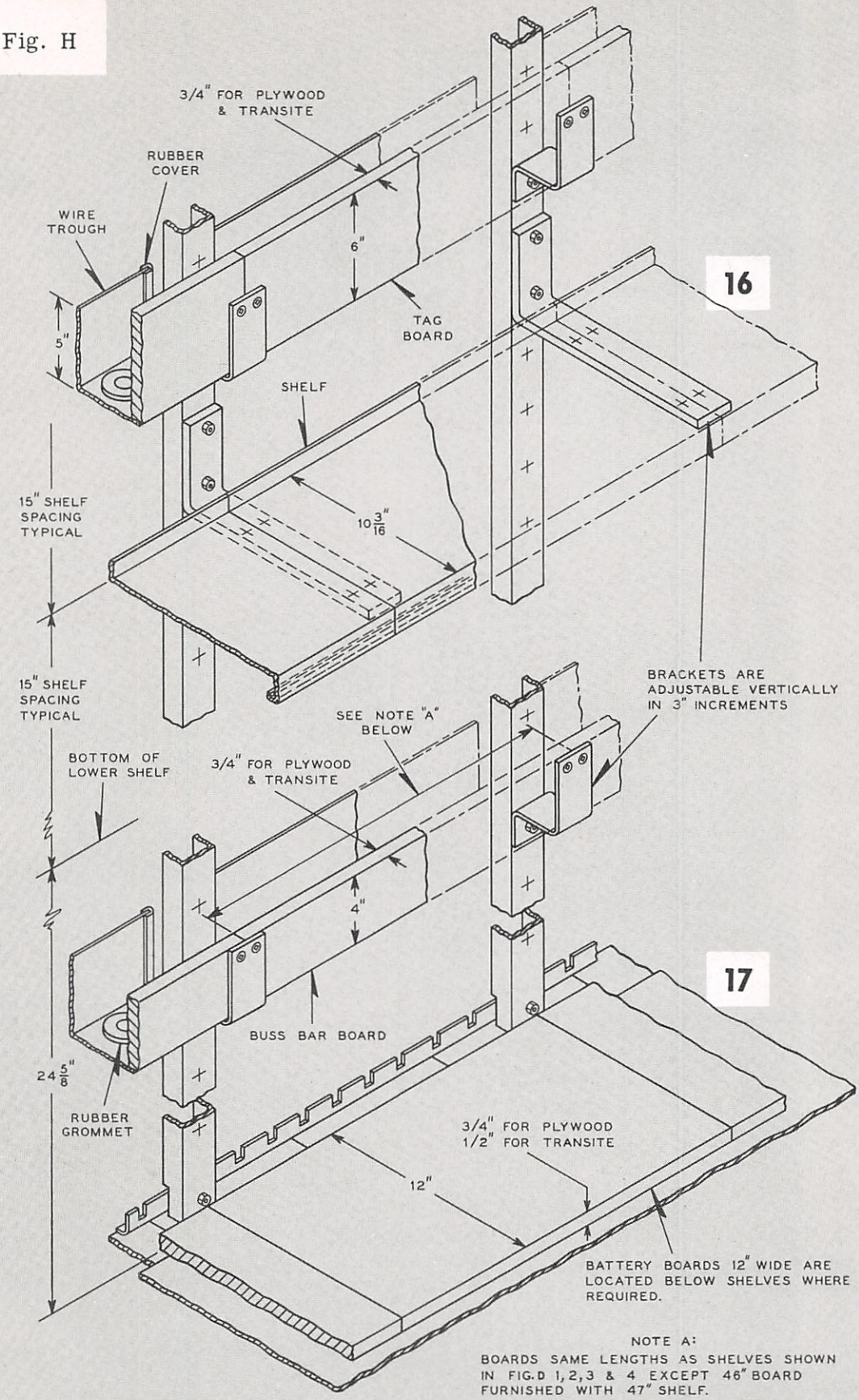

NOTE A:
BOARDS SAME LENGTHS AS SHELVES SHOWN IN FIG. D 1, 2, 3 & 4 EXCEPT 46" BOARD FURNISHED WITH 47" SHELF.

Fig. I

NOTE:-
AERIAL CABLE OUTLETS TO BE LOCATED AT KNOCKOUTS ABOVE DOOR.
(3 KNOCKOUTS PROVIDED ABOVE EACH DOOR)

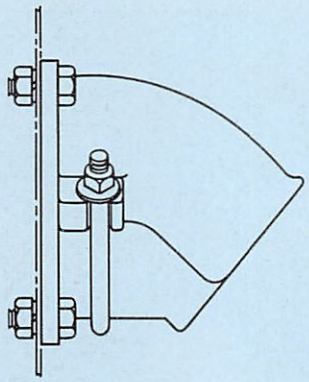

CABLE OPENING = 10 SQ. IN.

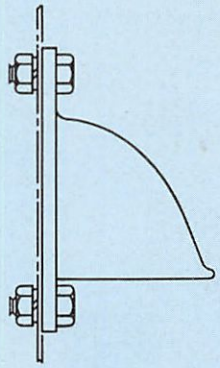

CABLE OPENING = 5.4 SQ. IN.

CABLE OUTLETS (WALL TYPE)

NOTE:-
4 KNOCKOUTS PROVIDED IN 5'-8" WIDE HOUSE
4 KNOCKOUTS PROVIDED IN 6'-6" WIDE HOUSE
7 KNOCKOUTS PROVIDED IN 8'-6" WIDE HOUSE

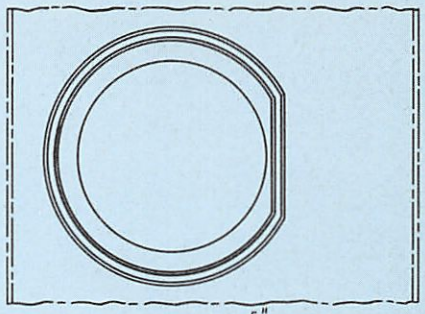

CABLE OPENING = 13 SQ. IN.

$4\frac{5}{8}$" DIA. KNOCKOUTS IN FLOOR CHANNEL

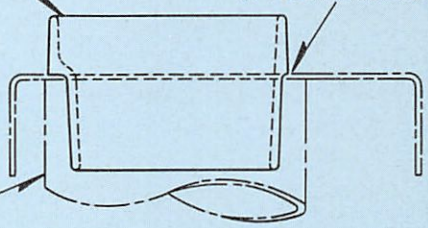

FOR REFERENCE ONLY (36" LONG)

CABLE OUTLETS (FLOOR TYPE)

$\frac{3}{8}$" X 1" HEX. HD. CAP SCREWS, $\frac{3}{8}$" HEX. NUTS AND $\frac{3}{8}$" PLAIN S. LOCK WASHERS

CHASE NIPPLE

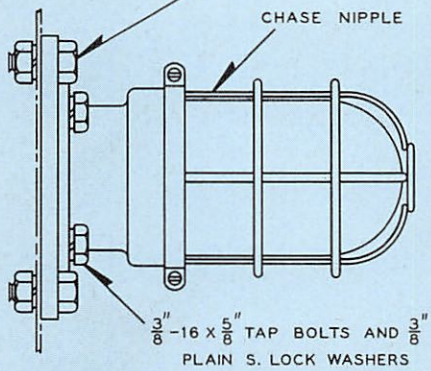

$\frac{3}{8}$"-16 X $\frac{5}{8}$" TAP BOLTS AND $\frac{3}{8}$" PLAIN S. LOCK WASHERS

CALL LIGHT-TYPE A

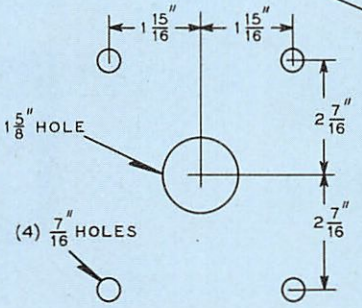

NOTE:-
EITHER CALL LIGHT MAY BE LOCATED AT KNOCKOUT HOLES ABOVE DOOR. ANY OTHER LOCATIONS WILL REQUIRE THIS GROUP OF HOLES.

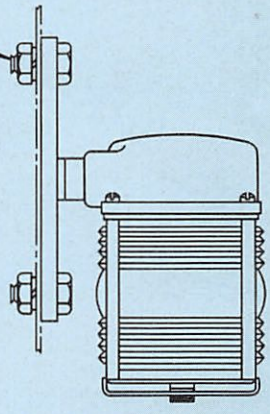

CALL LIGHT-TYPE B

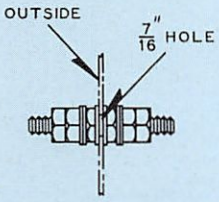

GROUND STUD

(4) $\frac{3}{4}$" X 24" FOUNDATION BOLTS, WASHERS AND $\frac{3}{4}$" HEX. NUTS

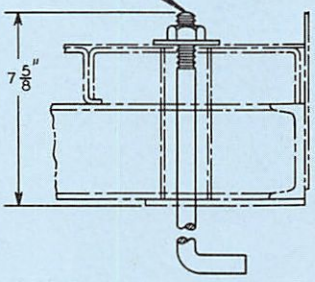

SECTION THRU CORNER OF BASE

FOUNDATION BOLTS FOR CONCRETE PIERS

SEE VIEW A

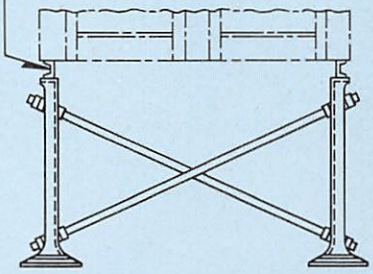

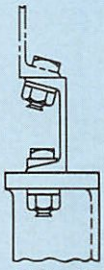

VIEW A

CAST IRON FOUNDATION PIERS

A0.58-1.2M-10.58.1

Printed in U. S. A.

STYLE RS SHEET STEEL INSTRUMENT CASE

6' 9" Instrument Case				
REF.	PIECE	DIAGRAM	MAXIMUM NUMBER PN-150 RELAYS	DRAWING
D	UN307388	L	-	D2638-1A
Da	UN307391	M	-	D2638-1A
Db	UN318729	N	-	D2638-1A
Dc	UN331679	P	24	D2638-1D
Dd	UN376696	Q	48	D2638-1D

9' 8" Instrument Case				
REF.	PIECE	DIAGRAM	MAXIMUM NUMBER PN-150 RELAYS	DRAWING
E	UN307394	L	-	D2638-3A
Ea	UN307397	M	-	D2638-3A
Eb	UN318731	N	-	D2638-3A
Ec	UN376694	P	40	D2638-3D
Ed	UN376697	Q	80	D2638-3D

STYLE RS SHEET STEEL INSTRUMENT CASE

STYLE RS SHEET STEEL INSTRUMENT CASE

The Style RS (removable shelf) Sheet Steel Instrument Case provides flexible arrangements designed to take care of the various installations required by field conditions. Through the use of movable shelves, wire chases and removable backboard floor angle - shelf spacing, wire chase spacing and backboard can be arranged in the field as required, and the instrument case can be wired with or without shelves installed.

A feature of the Style RS Case is the hinged front and rear doors. (See Fig. 1).

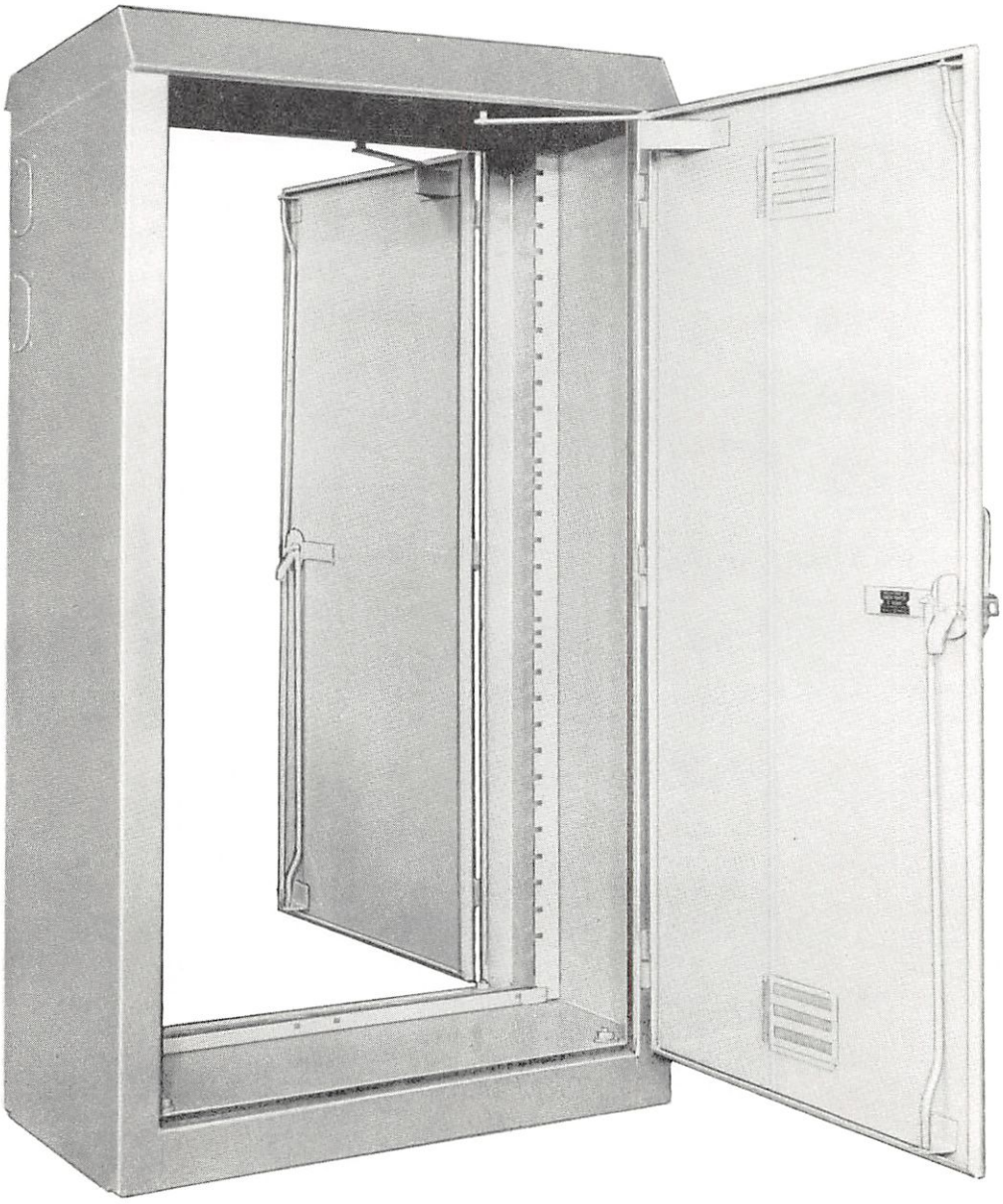

Figure 1 . . . Style RS 3' 3-1/2" Instrument Case (High) Showing Hinged Removable Front and Rear Doors

Since both the front and rear doors can be easily opened, instruments and wiring can be checked from either side of the case, a feature particularly useful when housing plug-in relays. Both front and rear doors have an inside, sliding door stop which automatically stops the door in either the 90-degree or 180-degree open position. All the doors are removable, being assembled to the case with "come apart hinges".

The Style RS Case has the following additional features.

1. The roof is one piece which eliminates lap joints over the doors. This prevents the passage of dust and snow.
2. The shelves are stiffened by an extra bend.
3. The bottom of the four sides is bent to form a groove to wrap upward over the bottom edges of the base. This groove is filled with caulking and when pressed on the base makes a weather-tight joint.
4. The front and rear doors are tightly sealed by the use of an all-weather neoprene covered sponge rubber gasket.

CONSTRUCTION

The basic case consists of a shell having hinged removable front and rear doors. Vertical supporting angles are provided on each side (and in the middle of larger cases) for mounting movable wire chases and movable shelves. These vertical angles are provided with notches which allow for assembly of shelves or wire chases in 2" vertical increments by bolting them in place to "snap-in" nuts for which slots are provided.

The 6' 9" and 9' 8" cases have a center post between the doors, and two half shelves instead of one full shelf are used. It is possible to assemble half shelves in either side of the case and any combination of half shelves can be made.

Standard widths for the Style RS Case are 3' 3-1/2", 4' 11", 6' 9" and 9' 8". All these widths can be furnished in the 3-shelf height (5' 6" door opening). The 3' 3-1/2" wide case can also be furnished in the 2-shelf height (3' 9" door opening).

The Style RS Case can be mounted on concrete or on cast iron piers. The foundation bolt spacing is the same as previously used for the Style S Case; i.e., 18-1/2" from front bolt to rear bolt (longitudinal spacing depends on width of case), (see Plate L2-1.2). The foundation bolts (3/4" diameter) are applied inside the case. See Catalog Section "P" for detailed ordering references on cast-iron piers.

The high cases (5' 6" door) have two "knockouts" on each side for aerial cable outlets. The low cases (3' 9" door) have one "knockout" on each side. Knockouts are provided in the rear of the base for maximum number of parkway cable outlets.

The RS Cases are made of sheet steel using #14 gauge for sides and roof, #12 gauge for doors and #11 gauge for the base.

ARRANGEMENT POSSIBILITIES

Each of the case sizes can be furnished in five basic arrangements as shown in Fig. 3. With these five basic arrangements, it is possible, to make up any combination in the field necessitated by local conditions. If certain modifications such as adding extra shelves, horizontal relay supports or wire chases to the

basic arrangements are required in the field, these can be easily made by ordering the necessary parts shown on Plate L2-1.1. It can readily be seen that the combinations are sufficient to satisfy any need.

FACTORY WIRING

For factory wiring there are available three arrangements for conventional relays and one arrangement for plug-in relays.

The wiring arrangements for conventional relays are as follows:

A. Shelf mounted instruments with tag board type wire chase, with individual wire holes and flat (plastic or fibre) tags fastened to front of wire chase.

B. Shelf mounted instruments with backboard with individual wire holes and flat (plastic or fibre) tags fastened to backboard. (See Fig. 2).

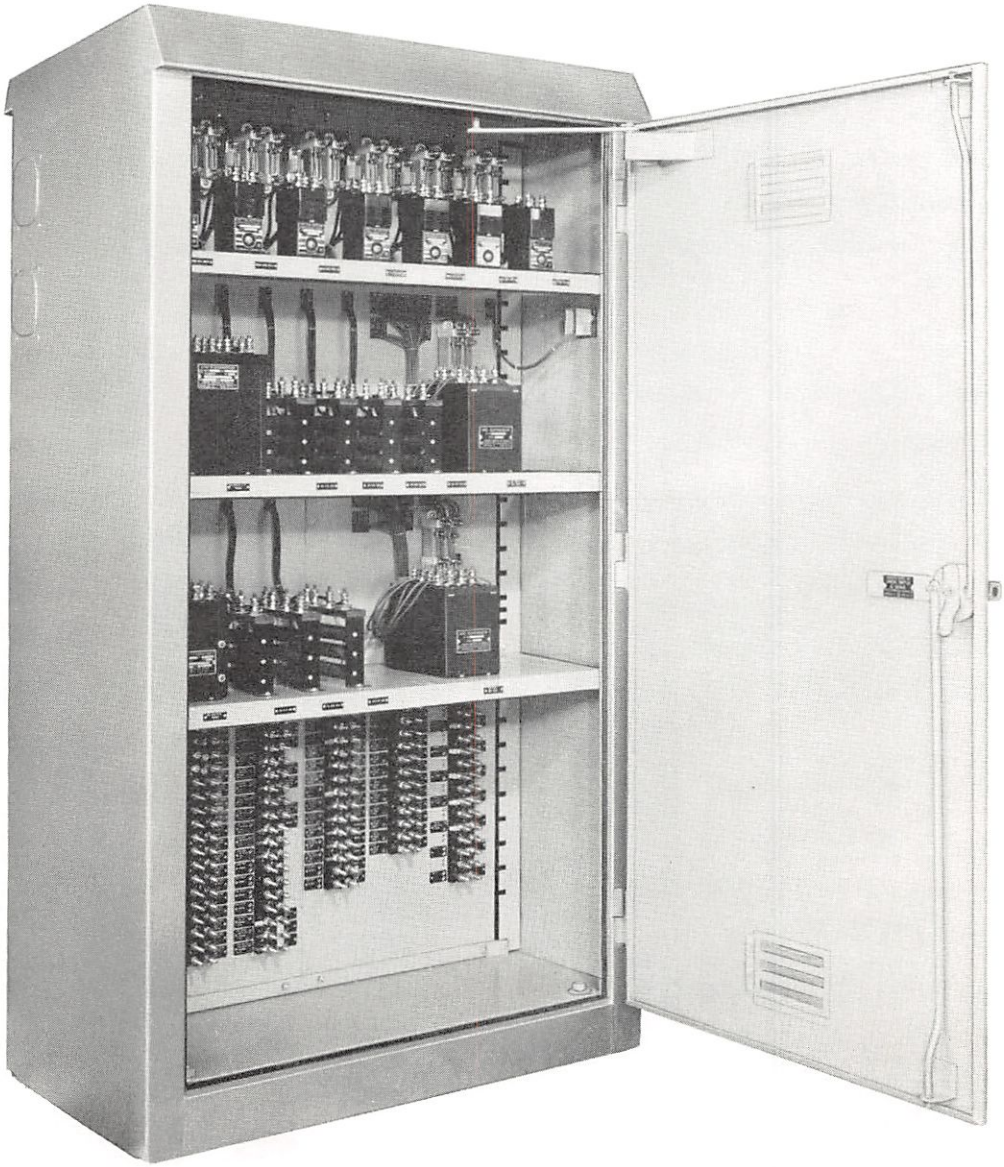

Figure 2 . . . Style RS 3' 3-1/2" Instrument Case (High) Wiring Arrangement B.

C. Wall type wiring - Similar to Wiring Arrangement B.

The arrangement for plug-in relays is as follows:

D. Relays mounted in horizontal rows with steel wire chases having large holes with rubber grommets and wiring in the rear with plastic sleeve type identification tags.

PAINTING - STANDARD

Outside painting consists of:

1 Coat of chromate primer
2 Coats of aluminum
1 Coat of mastic under base

Inside metal parts are painted with:

1 Coat of chromate primer
2 Coats of gray enamel

Plywood boards are painted with:

1 Coat of primer
2 Coats of gray enamel

SHIPPING

Cases having wire chases and shelves will be shipped with the wire chases and shelves spaced as shown in Fig. 3. Parkway cable and aerial outlets, ground terminals and foundation bolts will be shipped inside the case.

ORDERING REFERENCES

Order by plate number, reference, piece number and abbreviated description. Transite backboard terminal boards and tag boards are available and should be specified if desired.

If complete case is ordered, the number of parkway cable and aerial outlets, and the number of ground terminals required should be specified. If foundation bolts are needed this should also be specified. The outlets, ground terminals, and foundation bolts will be shipped loose for installation in the fields. (See Plate L2-1.2 for ordering information).

WEIGHT INFORMATION

Size	With Plywood Backboard	With Transite Backboard
3' 3-1/2" Low	372 pounds	414 pounds
3' 3-1/2" High	476 pounds	536 pounds
4' 11"	688 pounds	782 pounds
6' 9"	847 pounds	975 pounds
9' 8"	1212 pounds	1400 pounds

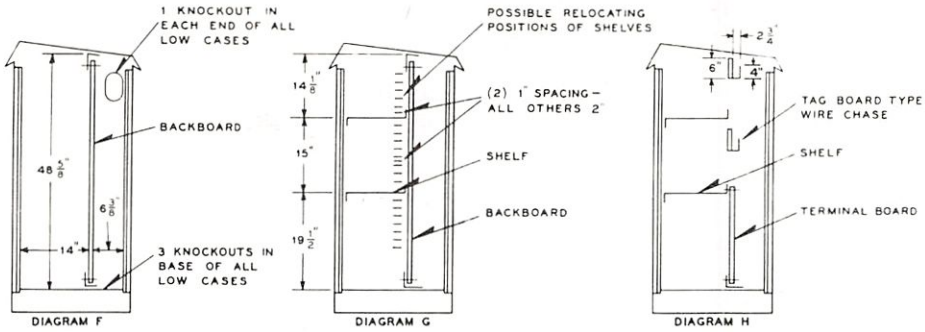

CASES WITH BACKBOARDS, SHELVES AND WIRE CHASES

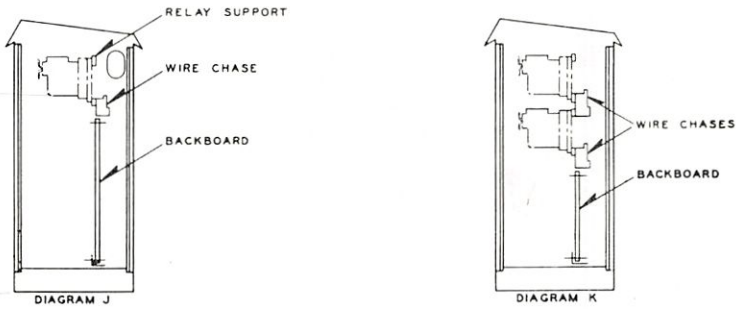

CASES ARRANGED FOR WALL MOUNTED PLUG-IN RELAYS

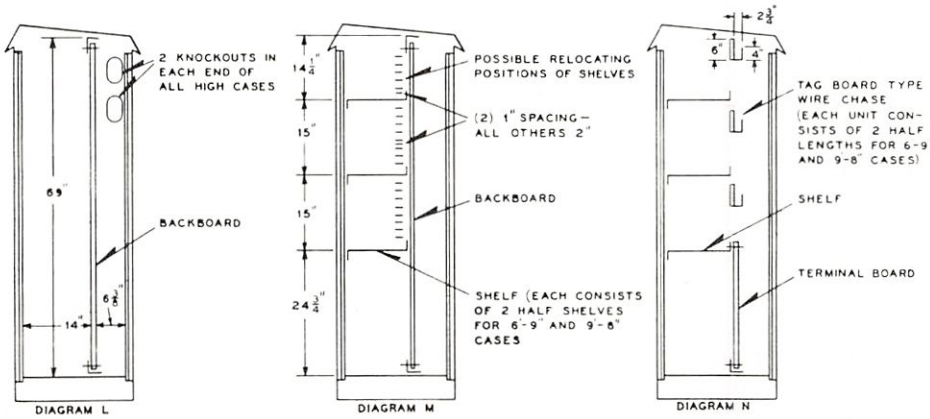

CASES WITH BACKBOARDS, SHELVES AND WIRE CHASES

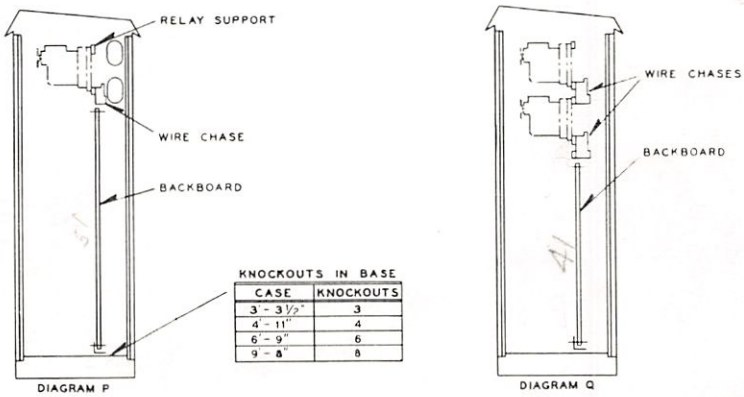

KNOCKOUTS IN BASE

CASE	KNOCKOUTS
3' - 3½"	3
4' - 11"	4
6' - 9"	6
9' - 8"	8

CASES ARRANGED FOR WALL MOUNTED PLUG-IN RELAYS

Figure 3 . . . Style RS Sheet Steel Instrument Case

STYLE RS SHEET STEEL INSTRUMENT CASE

Refer to Plate L2-1.1 for Detail Parts
and to Plate L2-1.2 for Miscellaneous Parts

Order by Plate, Reference, Piece and Abbreviated Description

3' 3-1/2" Instrument Case (low)

REF.	PIECE	DIAGRAM	MAXIMUM NUMBER PN-150 RELAYS	DRAWING
A	UN318437	F	-	D2638-6A
Aa	UN318439	G	-	D2638-6A
Ab	UN318717	H	-	D2638-6A
Ac	UN331195	J	12	D2638-6D
Ad	UN376693	K	24	D2638-6D

3' 3-1/2" Instrument Case (high)

REF.	PIECE	DIAGRAM	MAXIMUM NUMBER PN-150 RELAYS	DRAWING
B	UN307372	L	-	D2638-4A
Ba	UN307375	M	-	D2638-4A
Bb	UN318725	N	-	D2638-4A
Bc	UN337264	P	12	D2638-4D
Bd	UN376695	Q	24	D2638-4D

4' 11" Instrument Case

REF.	PIECE	DIAGRAM	MAXIMUM NUMBER PN-150 RELAYS	DRAWING
C	UN307359	L	-	D2638-2A
Ca	UN307362	M	-	D2638-2A
Cb	UN318727	N	-	D2638-2A
Cc	UN331692	P	20	D2638-2D
Cd	UN337241	Q	40	D2638-2D

6' 9" Instrument Case				
REF.	PIECE	DIAGRAM	MAXIMUM NUMBER PN-150 RELAYS	DRAWING
D	UN307388	L	-	D2638-1A
Da	UN307391 $441	M	-	D2638-1A
Db	UN318729	N	-	D2638-1A
Dc	UN331679	P	24	D2638-1D
Dd	UN376696	Q	48	D2638-1D

9' 8" Instrument Case				
REF.	PIECE	DIAGRAM	MAXIMUM NUMBER PN-150 RELAYS	DRAWING
E	UN307394	L	-	D2638-3A
Ea	UN307397 $730	M	-	D2638-3A
Eb	UN318731	N	-	D2638-3A
Ec	UN376694	P	40	D2638-3D
Ed	UN376697	Q	80	D2638-3D

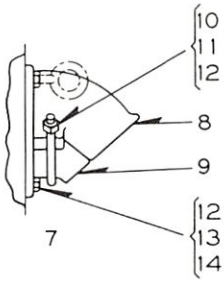

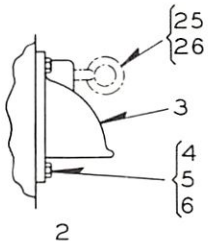

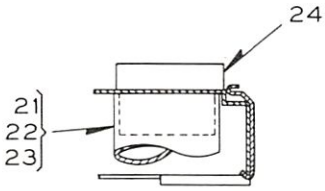

WIRE OUTLET
IN BASE

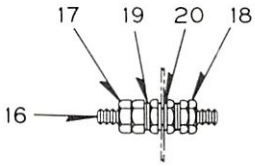

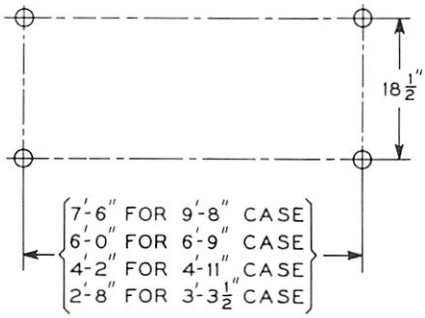

FOUNDATION BOLT SPACING

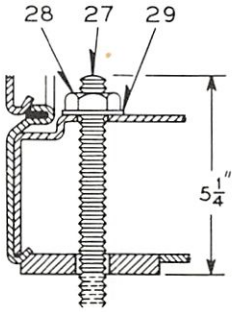

STYLE RS SHEET STEEL INSTRUMENT CASE

DETAIL PARTS

STYLE RS SHEET STEEL INSTRUMENT CASE

Detail Parts

Indented item descriptions indicate that the references in the "Used On" column refer to this Plate, L2-1.2. All other references refer to the General Plate L2-1.

Order by Plate, Reference, Piece and Abbreviated Description

REF.	PIECE	DESCRIPTION	DRAWING	USED ON
2	UN292840	Cable Outlet Complete (5.41 sq. in. wire opening) . .	B10342-128	All
3	UM229464	. Cable Outlet	B10342-128	2
4	UJ50053	. Cap Screw, 3/8" - 16 x 1" hex. hd.		2
5	UJ48009	. Hex. Nut, 3/8"		2
6	UJ47768	. Lock Washer, 3/8" plain steel.		2
7	UN192013	Cable Outlet Complete (10 sq. in. wire opening). . . .	B10342-81	All
8	UM192011	. Cable Outlet	B10342-81	7
9	UM192012	. Clamp	B10342-81	7
10	UM192010	. U-Bolt	8782-200	7
11	UJ48009	. Hex. Nut, 3/8"		7
12	UJ47502	. Plate Washer		7
13	UJ50053	. Cap Screw		7
14	UJ47768	. Lock Washer, 3/8" plain steel		7
15	UN318933	Ground Terminal Complete	12451-427	All
16	UM295979	. Stud, Ground	8114-1190	15
17	UM210285	. Nut	8109-29	15
18	UM210286	. Nut	8109-29	15
19	UM13928	. Washer	7828-46	15
20	UJ47779	. Lock Washer, 3/8" plain steel (Cad. Pl.)		15
21	UN299647	Pipe Complete	B10342-126A	All
22	UM299646	. Pipe, 36" long.	B10342-126A	21
23	UJ50574	. Set Screw, Sq. hd. cup point		21
24	UM221710	Wire Outlet (13 sq. in. wire opening).	B10342-126	All
25	UM262665	Eyebolt	8034-185	All
26	UJ8009	Hex. Nut, 3/8" (Cad. Pl.)		All
27	UM10478	Foundation Bolt, 3/4" x 1/8" for mounting case on concrete	7913-44	All
27a	UJ463005	Bolt, 3/4" x 7" hex. hd. with nut, for mounting case on cast iron foundation pier		All

REF.	PIECE	DESCRIPTION	DRAWING	USED ON
28	UJ48026	Hex. Nut, 3/4"		All
29	UJ47506	Plate Washer, for use with Ref. 27		All
29a	UJ47795	Plate Washer for use with Ref. 27a		All

17-1/2" STYLE S SHEET STEEL INSTRUMENT CASE FOR POLE OR FOUNDATION MOUNTING

The Style S Sheet Steel Instrument Cases have been redesigned to satisfy additional field requirements. The new 17-1/2" design features removable shelves, knockouts on both sides for standard aerial outlets, and one knockout in the base for a standard base outlet.

The Style S Cases are constructed of #14 gauge rust resisting sheet steel. The design employs relatively few individual pieces thus reducing seam and spot welding requirements and providing rigidity to the finished product.

APPLICATION

Style S Cases provide an ideal housing for relays, reactors, fuse blocks, terminal boards and other associated equipment used in railway signaling devices.

FEATURES

Maintenance expense, other than painting is virtually eliminated by the rugged construction.

Doors are provided with weather proof packing, well secured in position to provide protection against the elements and foreign particles.

Screened ventilators in the doors provide the necessary air circulation to protect against sweating, which may damage the equipment.

The fire hazard, particularly from an outside source, is greatly reduced.

These cases are made as nearly rust-proof as is consistent with available material and processes.

MOUNTING

The Style S Instrument Case is designed to permit mounting on a variety of sizes of pipe posts as well as for cast iron piers or concrete foundations.

Fittings for mounting instrument cases on pipe posts are shown in the details of Catalog Plate L2-2. See Catalog Section "P" for detailed ordering references for cast iron piers.

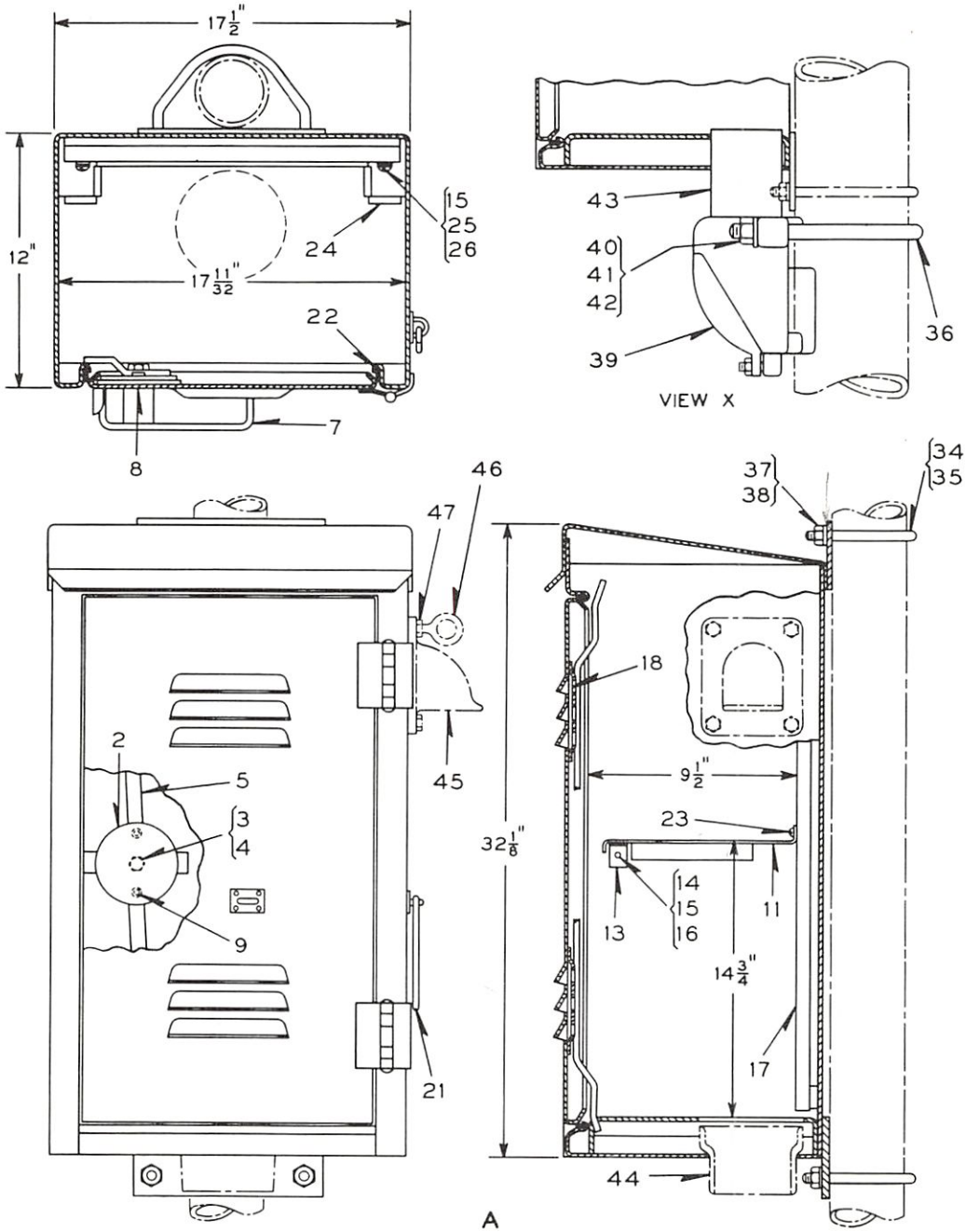

17-1/2" STYLE S SHEET STEEL INSTRUMENT CASE

FOR MOUNTING ON PIPE POST

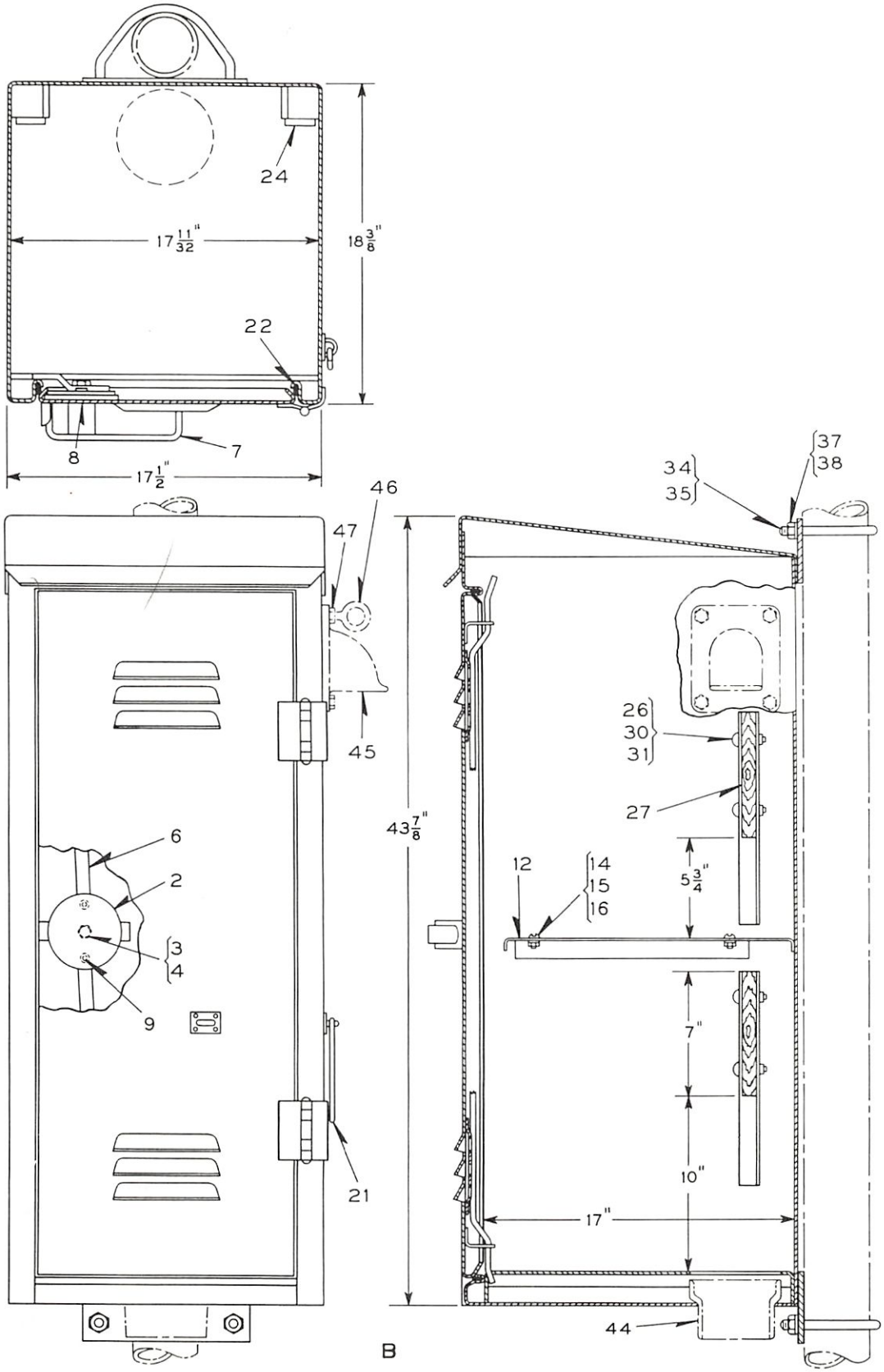

17-1/2" STYLE S SHEET STEEL INSTRUMENT CASE

FOR MOUNTING ON PIPE POST

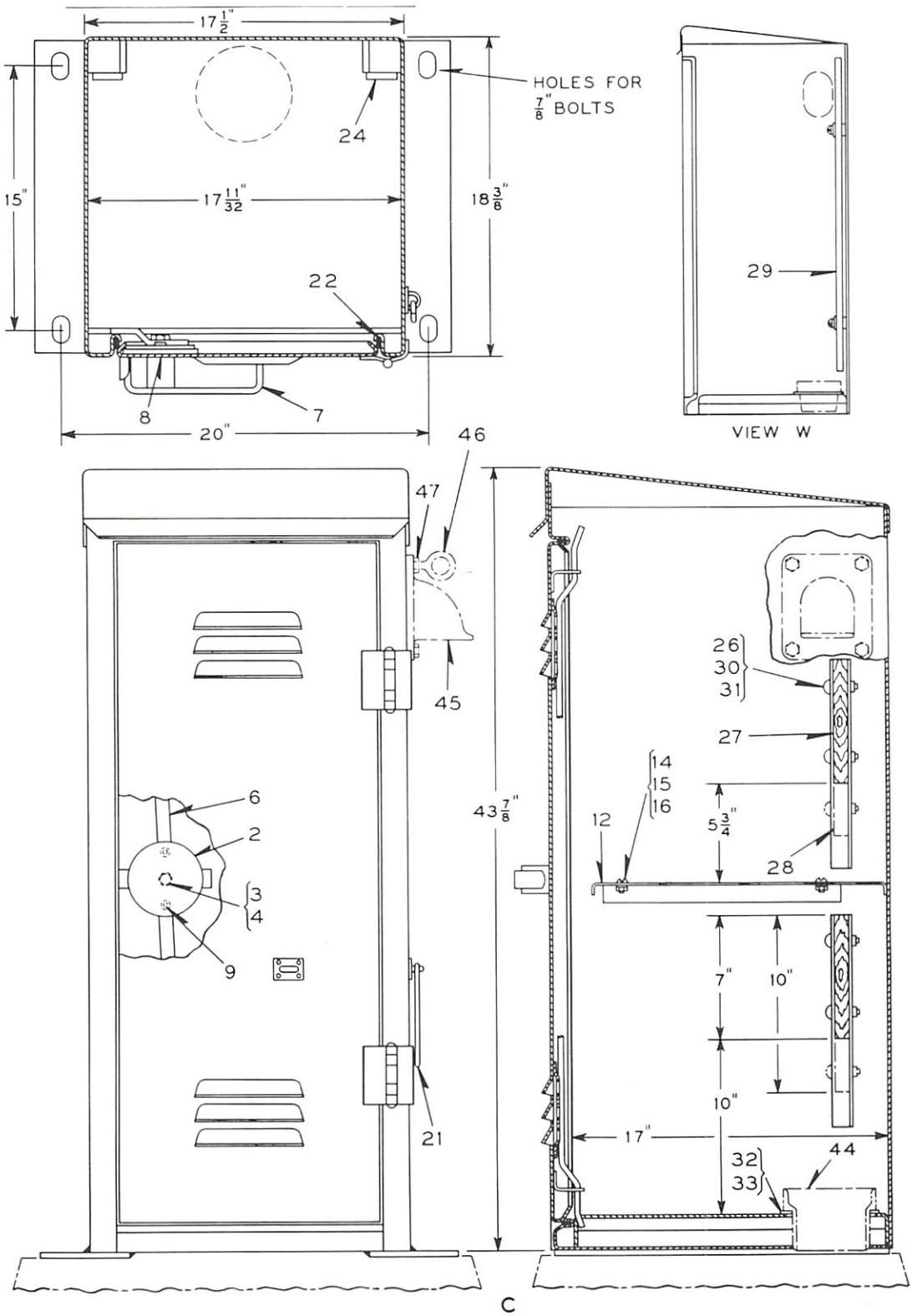

17 - 1/2" STYLE S SHEET STEEL INSTRUMENT CASE

FOR GROUND MOUNTING

17-1/2'' STYLE S SHEET STEEL INSTRUMENT CASE FOR POLE OR FOUNDATION MOUNTING

Instrument Cases listed below do not include Refs. 44 thru 49 inclusive. These if desired must be ordered separately.

For Foundation Piers see Section P of Catalog.

Indented item descriptions indicate that the references in the "Used On" column refer to this Plate L2-2.

Order by Plate, Reference, Piece and Abbreviated Description

REF.	PIECE	DESCRIPTION	DRAWING
A	UN255781	17-1/2" Style S Sheet Steel Instrument Case Complete with shelf, back board and fittings for mounting on 5" pipe post . . .	D2439-48A
Aa	UN347436 155	17-1/2" Style S Sheet Steel Instrument Case Complete with shelf, back board and fittings for mounting on 3", 3-1/2", or 4" pipe post	D2439-48A
Ab	UN345386	17-1/2" Style S Sheet Steel Instrument Case Complete with shelf, back board and fittings per view X. For mounting on 3" pipe post. (Does not include U-Bolts for attaching case to pipe post)	D2439-48A
B	UN323170 $161	17-1/2" Style S Sheet Steel Instrument Case Complete with shelf and two 7" Terminal Boards with fittings for mounting on 3", 3-1/2" or 4" pipe post	D2439-176A
Ba	UN376844	17-1/2" Style S Sheet Steel Instrument Case Complete with shelf and two 7" Terminal Boards with fittings for mounting on 5" pipe post.	D2439-176A
C	UN217017 161	17-1/2" Style S Sheet Steel Instrument Case Complete with shelf and two 7" Terminal Boards for use with foundation piers or concrete foundation.	D2439-102
Ca	UN218703	17-1/2" Style S Sheet Steel Instrument Case Complete with shelf and two 10" Terminal Boards for use with foundation piers or concrete foundation.	D2439-102
Cb	UN266104	17-1/2" Style S Sheet Steel Instrument Case Complete with Terminal Board per view W (without shelf), for use with foundation piers or concrete foundation.	D2439-102

REF.	PIECE	DESCRIPTION	DRAWING	USED ON
2	UN349675	. Latch Plate.	B35069-1	A thru Cb
3	UJ50038	. Screw, 5/16" x 1" hex. hd.		A thru Cb
4	UJ47767	. Lock Washer, 5/16" steel		A thru Cb
5	UM377053	. Locking Rod	9996-23	A, Aa, Ab
6	UM377054	. Locking Rod	9996-23	B thru Cb
7	UR170385	. Door Handle	8311-95	A thru Cb
8	UJ47261	. Gasket	8078-1586	A thru Cb

REF.	PIECE	DESCRIPTION	DRAWING	USED ON
9	UJ790327	Retainer Ring, 3/8"		A thru Cb
11	UM375873	Shelf	C9347-806	A, Aa, Ab
12	UM217035	Shelf	C9347-355	B thru Ca
13	UM375871	Shelf Bracket	B35027-126	A, Aa, Ab
14	UJ52642	Screw, 1/4" x 1/2" rd. hd. steel (Tin Pl.)		A thru Ca
15	UJ47775	Lock Washer, 1/4" steel (Tin Pl.)		A thru Cb
16	UJ48002	Hex. Nut, 1/4" steel (Tin Pl.)		A thru Ca
17	UM271279	Back Board	C9347-193	A, Aa, Ab
18	UM198925	Ventilator Screen	7318-80	A thru Cb
19	UJ63261	Name Plate (Not Shown)	8225-141	A thru Cb
20	UJ525039	Screw, No. 6 x 3/16" rd. hd. (Tin Pl.) for attaching name plate (Not Shown)		A thru Cb
21	UM234850	Door Hook, 6"	7913-404	A thru Cb
22	UA75095	Door Packing (Orders should specify length desired)	8078-1565	A thru Cb
23	UJ52922	Wood Screw, No. 10 x 7/8" rd. hd. steel (Tin Pl.)		A, Aa, Ab
24	UA75114	Extruded Rubber Strip, 8" long		A thru Ca
25	UJ52508	Screw, 1/4" x 1-1/8" rd. hd. steel (Tin Pl.)		A thru Ab Cb
26	UJ47501	Plate Washer, 1/4" steel (Tin Pl.)		A thru Cb
27	UM323164	Terminal Board, 7" wide	B10364-139	B, Ba, C
28	UM323163	Terminal Board, 10" wide	B10364-139	Ca
29	UM266098	Terminal Board	C9347-620	Cb
30	UJ52667	Screw, 1/4" x 1-1/4" rd. hd. steel (Tin Pl.)		B thru Ca
31	UJ480013	Nut, 1/4" - 20		B thru Ca
32	UM380397	Cable Outlet Plate	B35028-123	C, Ca, Cb
33	UJ52686	Screw, No. 8 x 3/8" rd. hd. steel (Tin Pl.)		C, Ca, Cb
34	UM375872	U-Bolt, 1/2" for 5" pipe	B35152-2	A, Ba
35	UM297544	U-Bolt, 1/2" for 3", 3-1/2", 4" pipe	8782-243	Aa, B
36	UM346183	U-Bolt, 3/4" for 3" pipe	8782-102	Ab
37	UJ48013	Hex. Nut, 1/2" steel (Cad. Pl.)		A, Aa, B Ba
38	UJ47769	Lock Washer, 1/2" plain steel		A, Aa, B Ba
39	UN130437	Bracket	C8034-17	Ab
40	UJ47772	Lock Washer, 3/4" plain steel (Cad. Pl.)		Ab
41	UJ47506	Plate Washer, 3/4" (Cad. Pl.)		Ab
42	UJ48026	Hex. Nut, 3/4" steel (Cad. Pl.)		Ab

REF.	PIECE	DESCRIPTION	DRAWING	USED ON
43	UM209846	Pipe, 3"	B10920-9	Ab
44	UM221710	Cable Outlet (Area of wire opening, 13 sq. in.). If desired cable outlet for Refs. C, Ca, and Cb can be located in knockout in bottom by removing cable outlet plate, Ref. 32	B10342-126	A, Aa, B thru Cb
45	UN292840	Cable Outlet (Area of wire opening, 5.41 sq. in.)	B10342-128	A thru Cb
46	UM262665	Eye Bolt	8034-185	A thru Cb
47	UJ48009	Hex. Nut, 3/8" steel (Cad. Pl.)		A thru Cb
48	UN318933	Ground Terminal Complete (Not Shown)	12451-427	A thru Cb
49	UN299649	Pipe, 5" x 36" long (Not Shown)	B10342-126A	A thru Cb

17-1/2" STYLE S SHEET STEEL INSTRUMENT CASE MOUNTED ON 3" PIPE POST

The 17-1/2" Style S sheet steel instrument case mounted on 3" pipe post features a complete package of all the mechanical components necessary for installation at a wayside location.

This particular arrangement includes the instrument case, pipe post, U-bolts, pinnacle, foundation bolts, cable outlet, eye bolt and base.

The Style S instrument case mounted on 3" pipe post provides another means of meeting customer service requirements, where this type of installation is required. For features and details of instrument case refer to Ref. Ab, Plate L2-2.

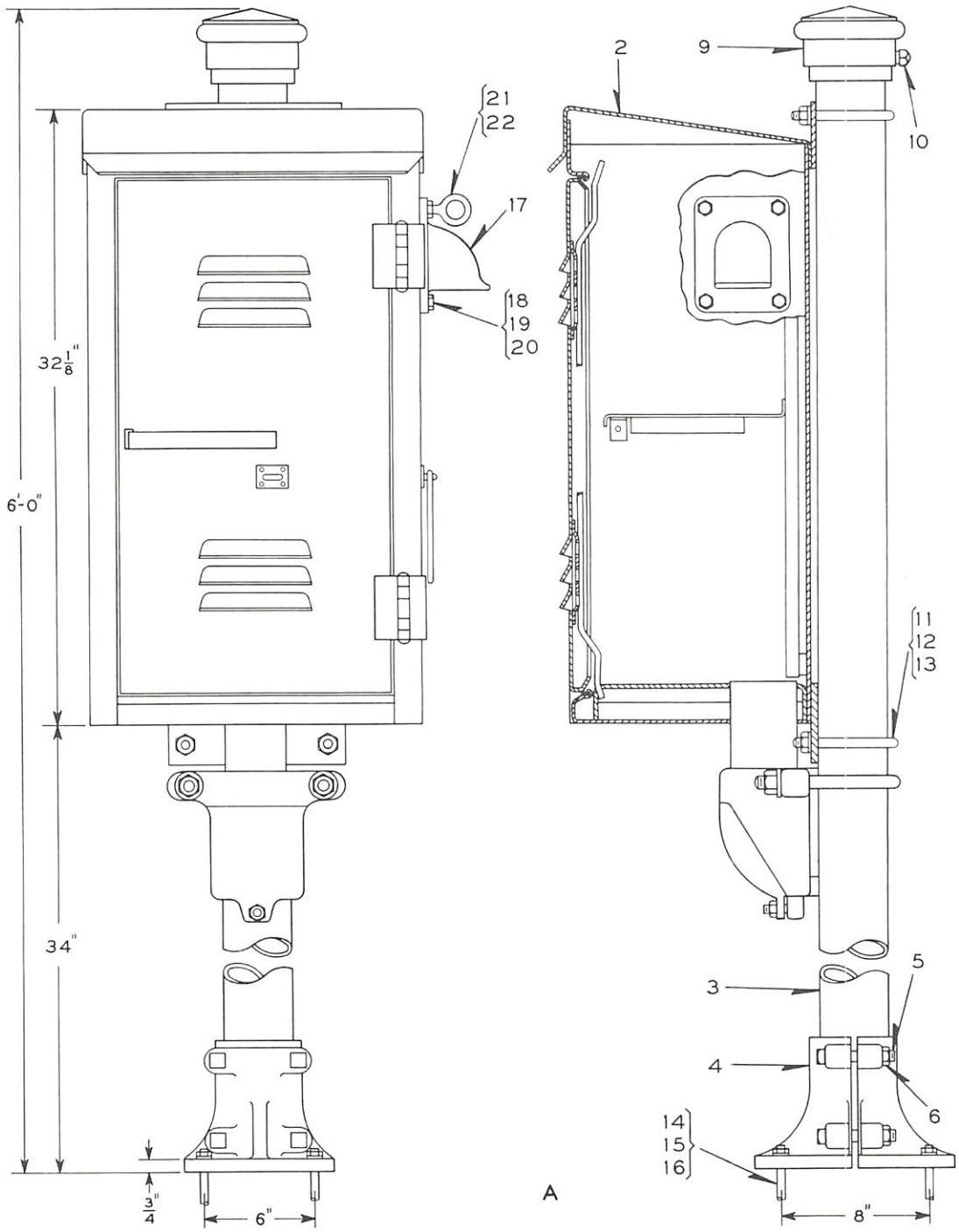

17 - 1/2" STYLE S SHEET STEEL INSTRUMENT CASE

MOUNTED ON 3" PIPE POST

17-1/2" STYLE S SHEET STEEL INSTRUMENT CASE MOUNTED ON 3" PIPE POST

Indented item descriptions indicate that the references in the "Used On" column refer to this Plate L2-5.

Order by Plate, Reference, Piece and Abbreviated Description

REF.	PIECE	DESCRIPTION	DRAWING
A	UO378895	17-1/2" Style S Sheet Steel Instrument Case Complete with 3" pipe post and fittings.	C50063-1

REF.	PIECE	DESCRIPTION	DRAWING	USED ON
2	UN345386	. Case Complete (See Plate L2-2 for details) . . .	D2439-48A	A
3	UN378894	. Pipe Post Complete, 3" (71" long) for mounting 17-1/2" instrument case	C50037-9	A
3a	UA31015	. . Pipe, 3" steel (70-1/4" long)		3
4	UM55185	. . Half Socket	C6634-1	3
5	UJ46671	. . Bolt, 1/2 x 4-1/2" sq. hd. steel		3
6	UJ48013	. . Hex. Nut, 1/2" steel		3
9	UN70957	. Pinnacle Complete	B8121-14	A
9a	UM70956	. . Pinnacle Only	B8121-14	9
10	UJ50597	. . Set Screw, 5/8" - 11 x 3/4" Cup point sq. hd.		9
11	UM297544	. U-Bolt, 1/2".	8782-243	A
12	UJ48013	. Hex. Nut, 1/2" steel (Cad. Pl.)		A
13	UJ47769	. Lock Washer, 1/2" plain steel (Cad. Pl.)		A
14	UM10478	. Foundation Bolt, 3/4" x 18".	7913-44	A
15	UJ48026	. Hex. Nut, 3/4" steel		A
16	UJ47506	. Plate Washer, 3/4".		A
17	UN292840	. Cable Outlet Complete	B10342-128	A
17a	UM229464	. . Cable Outlet Only	B10342-128	17
18	UJ50053	. . Cap Screw, 3/8" - 16 x 1".		17
19	UJ48009	. . Hex. Nut, 3/8"		17
20	UJ47768	. . Lock Washer, 3/8"		17
21	UM262665	. Eye Bolt.	8034-185	A
22	UJ48009	. Hex. Nut, 3/8" steel (Cad. Pl.)		A

PEDESTAL MOUNTED JUNCTION BOXES

The pedestal mounted junction box is a field housing which houses terminal blocks, variable resistors, fuse holders and various other components applicable to the needs of railway signaling.

The use of the pedestal eliminates the need of concrete foundations as the pedestal is placed directly into the ground.

APPLICATION

Junction boxes have general application to all types of installations where cables are to be terminated.

FEATURES

Materials: Junction box, cover, and pedestal are cast iron.

The larger type junction boxes, shown on Catalog Plates L3-4, and L3-5, are equipped with two elbow type ventilators with fine mesh screen, to provide air circulation and consequently minimize condensation in the junction box.

Cover joints are sealed with packing and cover bolts are located outside the box to seal the junction box against the weather elements and foreign particles.

All exposed bolts, nuts, and washers are cadium plated, to resist rust.

The junction box is installed above ground with the bottom several inches above ground level for air circulation underneath, and thus minimizes the difference in temperatures between the top and bottom of the box and any consequent tendency to cause condensation.

The cast iron pipe pedestal mountings provide for protection of incoming cables when brought into the box from underground. Pedestal has both side and bottom openings.

The larger type junction boxes, shown on Catalog Plates L3-4, and L3-5, have a well underneath the terminal compartment for pot-heading and sealing incoming cables.

The above features are in keeping with recognized service requirements.

TERMINAL BLOCKS

Terminals are A.A.R. type (#14-24) molded in blocks of bakelite insulation. Terminal nuts are accessible for socket wrench application.

FITTINGS

The junction boxes (Plates L3-2, L3-4, and L3-5) are provided with a knockout on two opposite sides for application of fittings for flexible steel conduit, hose conduit, or multi-conductor cable. Fittings are shown on Catalog Plates L3-2, L3-4, L3-5 and must be ordered separately if desired.

20	UJ48013	. Hex Nut, 1/2" steel (Cad. Pl.)		A
21	UJ50576	. Set Screw, 3/8" x 1" square head (Cad. Pl.)		A
22	UJ70526	. Connector for 1/2" to 5/8" O.D. cable		A

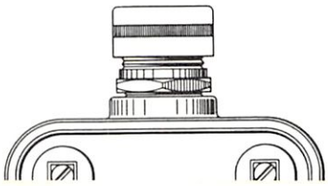

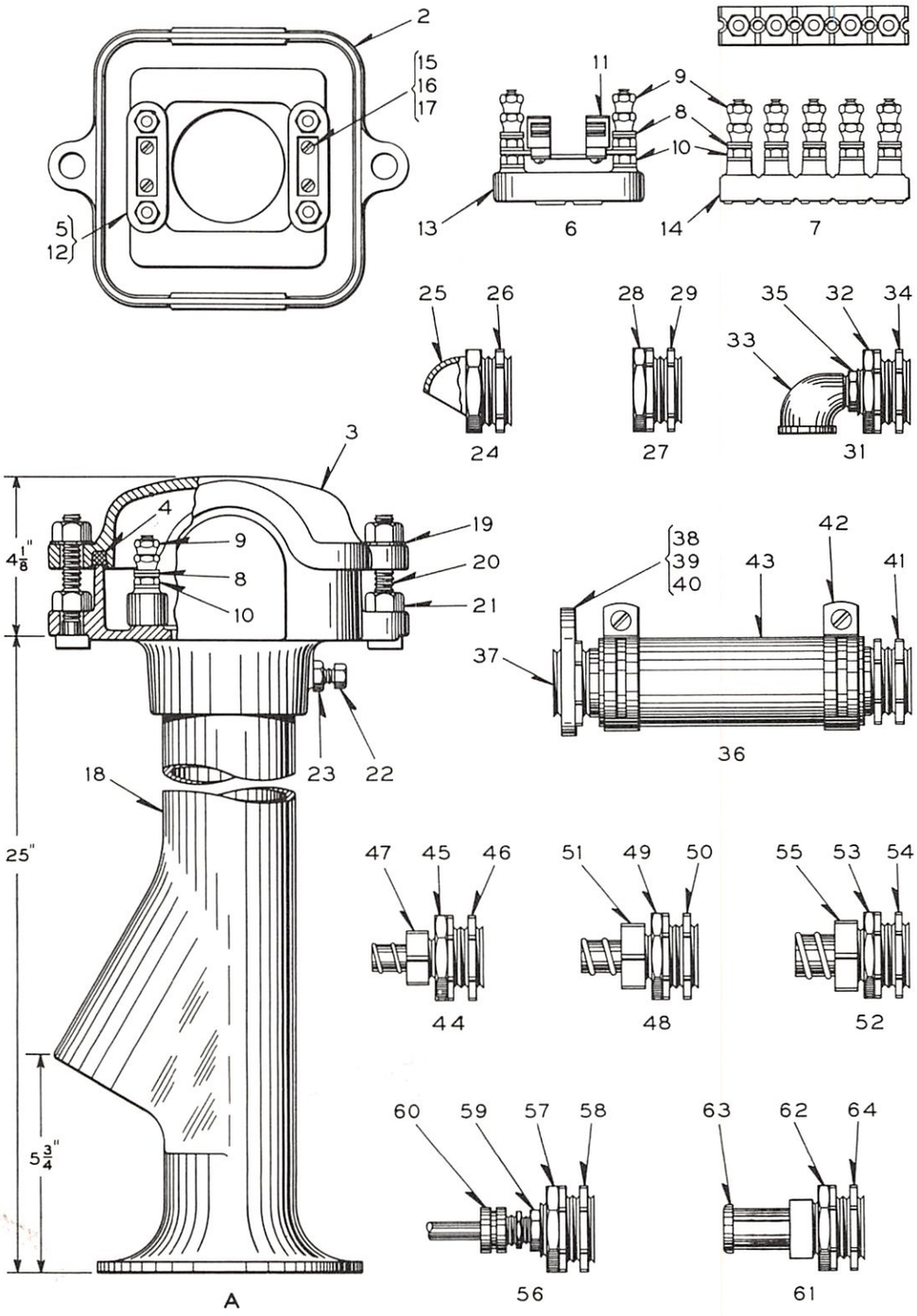

PEDESTAL MOUNTED JUNCTION BOXES

4 OR 10 TERMINALS

PEDESTAL MOUNTED JUNCTION BOXES

The pedestal mounted junction box is a field housing which houses terminal blocks, variable resistors, fuse holders and various other components applicable to the needs of railway signaling.

The use of the pedestal eliminates the need of concrete foundations as the pedestal is placed directly into the ground.

APPLICATION

Junction boxes have general application to all types of installations where cables are to be terminated.

FEATURES

Materials: Junction box, cover, and pedestal are cast iron.

The larger type junction boxes, shown on Catalog Plates L3-4, and L3-5, are equipped with two elbow type ventilators with fine mesh screen, to provide air circulation and consequently minimize condensation in the junction box.

Cover joints are sealed with packing and cover bolts are located outside the box to seal the junction box against the weather elements and foreign particles.

All exposed bolts, nuts, and washers are cadium plated, to resist rust.

The junction box is installed above ground with the bottom several inches above ground level for air circulation underneath, and thus minimizes the difference in temperatures between the top and bottom of the box and any consequent tendency to cause condensation.

The cast iron pipe pedestal mountings provide for protection of incoming cables when brought into the box from underground. Pedestal has both side and bottom openings.

The larger type junction boxes, shown on Catalog Plates L3-4, and L3-5, have a well underneath the terminal compartment for pot-heading and sealing incoming cables.

The above features are in keeping with recognized service requirements.

TERMINAL BLOCKS

Terminals are A.A.R. type (#14-24) molded in blocks of bakelite insulation. Terminal nuts are accessible for socket wrench application.

FITTINGS

The junction boxes (Plates L3-2, L3-4, and L3-5) are provided with a knockout on two opposite sides for application of fittings for flexible steel conduit, hose conduit, or multi-conductor cable. Fittings are shown on Catalog Plates L3-2, L3-4, L3-5 and must be ordered separately if desired.

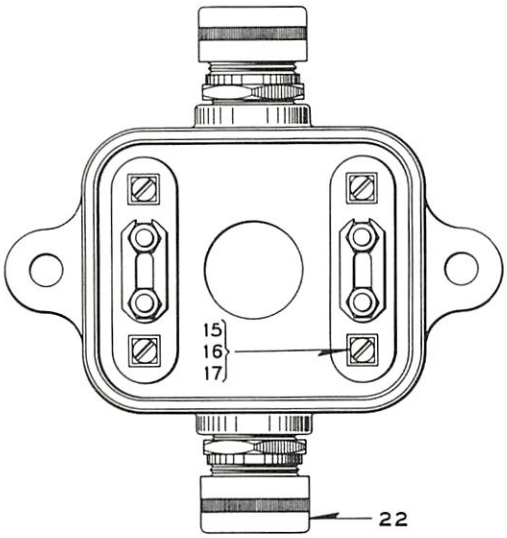

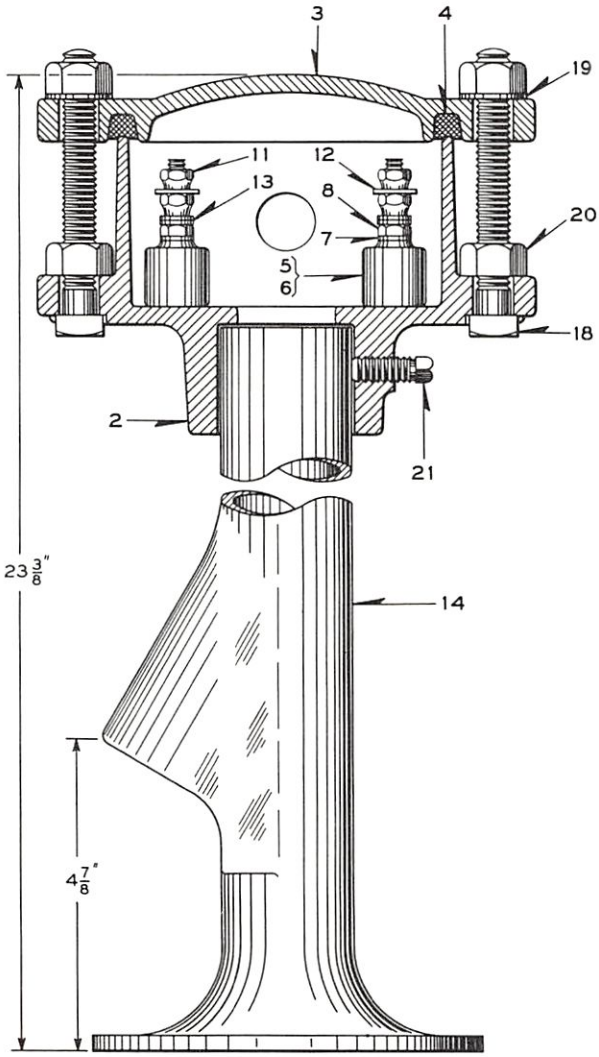

A

PEDESTAL MOUNTED JUNCTION BOX

(4 TERMINALS)

PEDESTAL MOUNTED JUNCTION BOX-4 TERMINALS

Indented item descriptions indicate that the references in the "Used On" column refer to this Plate L3-1.

Order by Plate, Reference, Piece and Abbreviated Description

REF.	PIECE	DESCRIPTION	DRAWING
A	UN386513	Junction Box Complete with Pedestal. Includes two Terminal Blocks (4 terminals) and two connectors for 1/2" x 5/8" O.D. Cable.	D66316-9

REF.	PIECE	DESCRIPTION	DRAWING	USED ON
2	UM289659	. Box.	D66314-14	A
3	UM289658	. Cover	D66314-13	A
4	UM320227	. Gasket	8078-1928	A
5	UN206754	. Terminal Block with one unit and one washer on each post	9968-1206	A
6	UJ77058	. . Terminal Block Only	9968-1030	5
7	UJ47818	. . Washer	7828-139	5
8	UM29103	. . Nut	8109-194	5
11	UM29101	. Nut.	8109-193	A
12	UM118975	. Terminal Connector	8064-481	A
13	UJ47818	. Washer	7828-139	A
14	UM206144	. Pedestal, 19-1/2" long, 1-1/2" inside diameter . .	C9175-12	A
15	UJ52203	. Screw, 1/4" x 1" fil. hd. steel (Cad. Pl.)		A
16	UM234466	. Washer	7826-316	A
17	UJ47775	. Lock Washer, 1/4" plain steel (Cad. Pl.)		A
18	UJ46542	. Bolt, 1/2" x 4-1/4" sq. hd. steel (Cad. Pl.)		A
19	UM7309	. Washer		A
20	UJ48013	. Hex Nut, 1/2" steel (Cad. Pl.)		A
21	UJ50576	. Set Screw, 3/8" x 1" square head (Cad. Pl.)		A
22	UJ70526	. Connector for 1/2" to 5/8" O.D. cable		A

PEDESTAL MOUNTED JUNCTION BOXES

The pedestal mounted junction box is a field housing which houses terminal blocks, variable resistors, fuse holders and various other components applicable to the needs of railway signaling.

The use of the pedestal eliminates the need of concrete foundations as the pedestal is placed directly into the ground.

APPLICATION

Junction boxes have general application to all types of installations where cables are to be terminated.

FEATURES

Materials: Junction box, cover, and pedestal are cast iron.

The larger type junction boxes, shown on Catalog Plates L3-4, and L3-5, are equipped with two elbow type ventilators with fine mesh screen, to provide air circulation and consequently minimize condensation in the junction box.

Cover joints are sealed with packing and cover bolts are located outside the box to seal the junction box against the weather elements and foreign particles.

All exposed bolts, nuts, and washers are cadium plated, to resist rust.

The junction box is installed above ground with the bottom several inches above ground level for air circulation underneath, and thus minimizes the difference in temperatures between the top and bottom of the box and any consequent tendency to cause condensation.

The cast iron pipe pedestal mountings provide for protection of incoming cables when brought into the box from underground. Pedestal has both side and bottom openings.

The larger type junction boxes, shown on Catalog Plates L3-4, and L3-5, have a well underneath the terminal compartment for pot-heading and sealing incoming cables.

The above features are in keeping with recognized service requirements.

TERMINAL BLOCKS

Terminals are A.A.R. type (#14-24) molded in blocks of bakelite insulation. Terminal nuts are accessible for socket wrench application.

FITTINGS

The junction boxes (Plates L3-2, L3-4, and L3-5) are provided with a knockout on two opposite sides for application of fittings for flexible steel conduit, hose conduit, or multi-conductor cable. Fittings are shown on Catalog Plates L3-2, L3-4, L3-5 and must be ordered separately if desired.

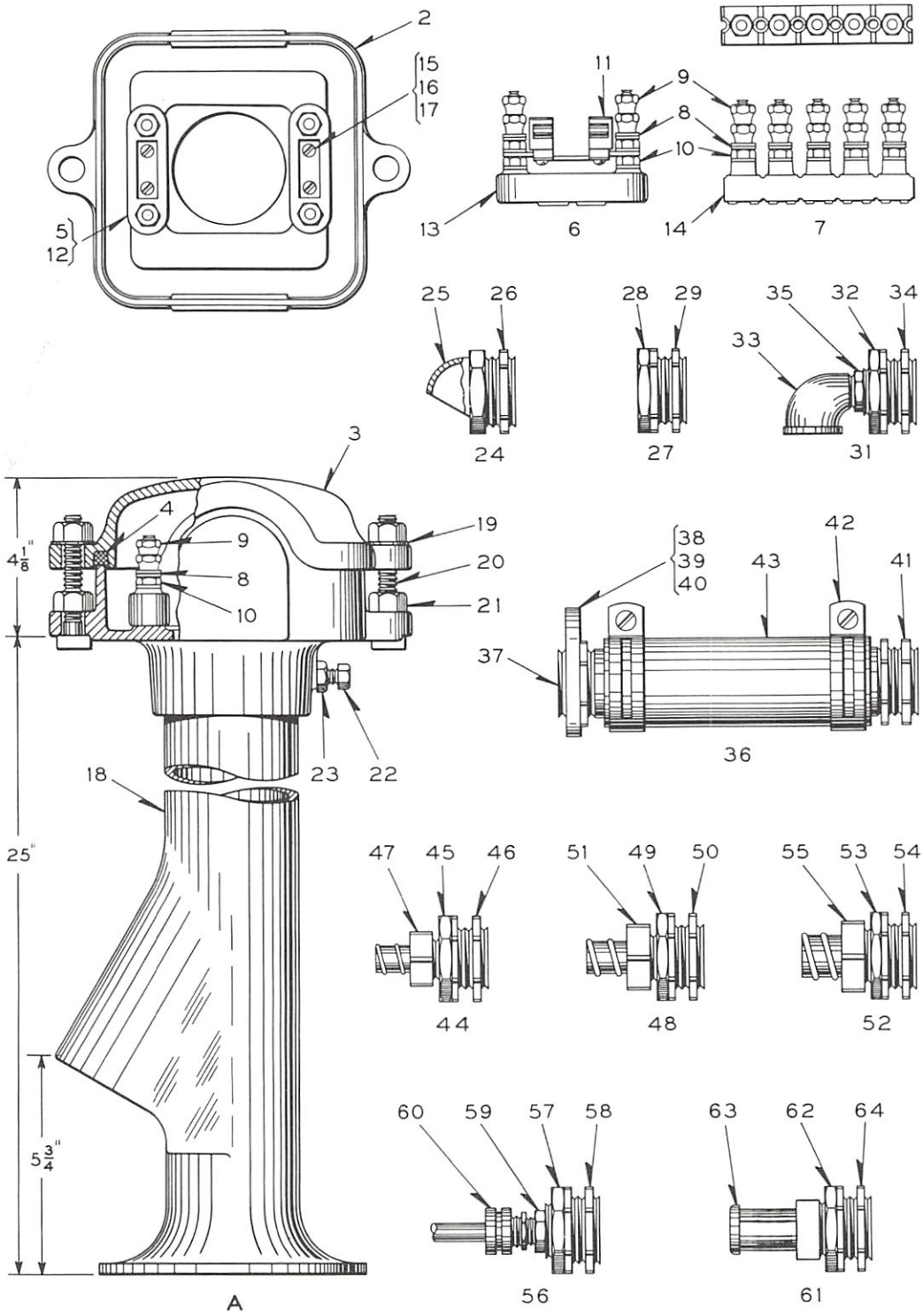

PEDESTAL MOUNTED JUNCTION BOXES

4 OR 10 TERMINALS

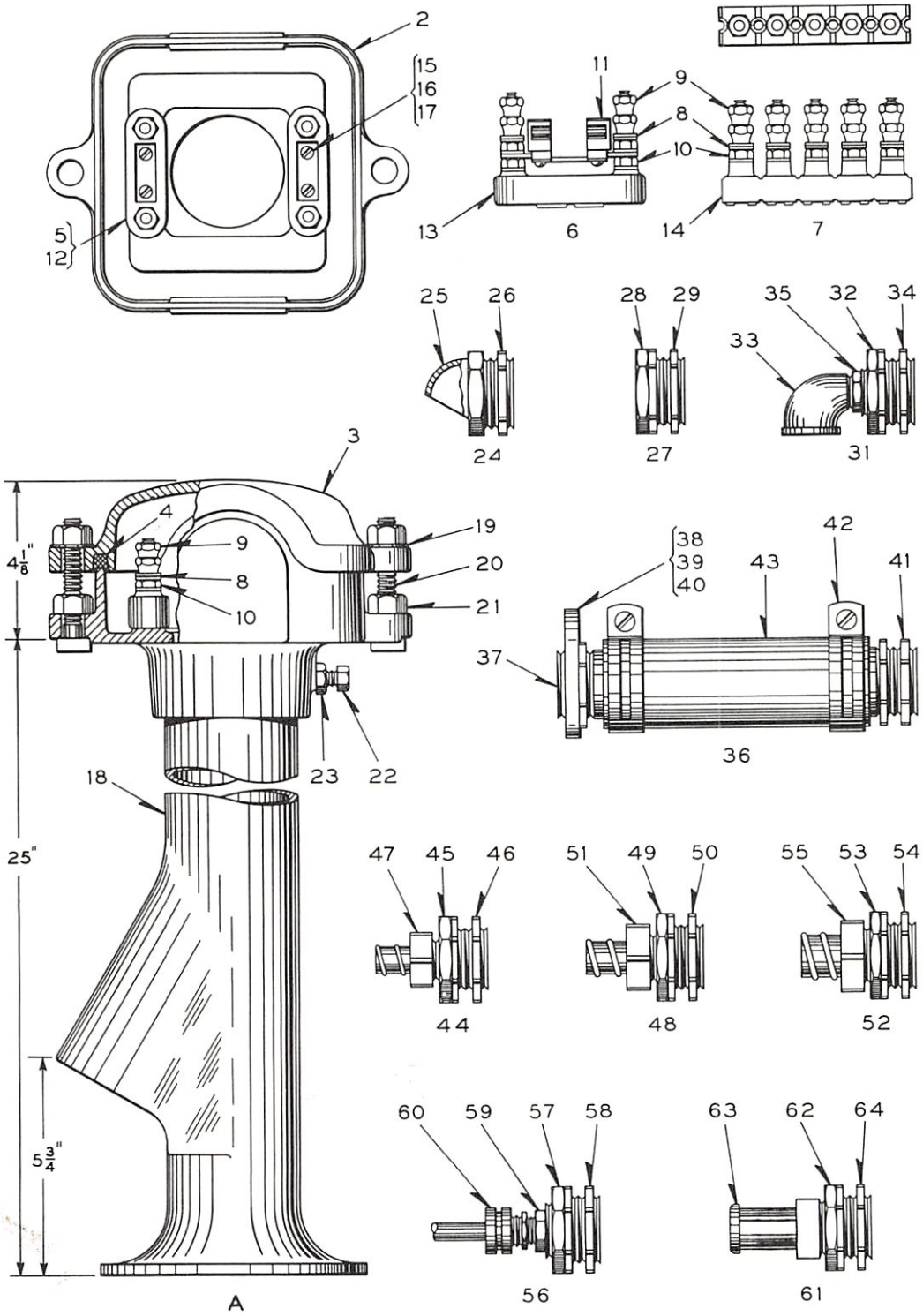

PEDESTAL MOUNTED JUNCTION BOXES

4 OR 10 TERMINALS

PEDESTAL MOUNTED JUNCTION BOXES
4 OR 10 TERMINALS

Junction Boxes listed below do not include fittings Refs. 24 thru 64 inclusive. If desired, fittings must be ordered separately.

Indented item descriptions indicate that the references in the "Used On" column refer to this Plate L3-2.

Order by Plate, Reference, Piece and Abbreviated Description

REF.	PIECE	DESCRIPTION	DRAWING
A	UN376937	Junction Box Complete with Pedestal. Includes two Terminal Blocks Ref. 5 (4 terminals). Does not include conduit fittings .	D66316-5
Aa	UN376940	Junction Box Complete with Pedestal. Includes one Terminal Block Ref. 5 (2 terminals) and one Terminal Block Ref. 6 equipped with Fuse Holder (2 terminals). Does not include conduit fittings	D66316-5
Ab	UN376941	Junction Box Complete with Pedestal. Includes two Terminal Blocks Ref. 7 (10 terminals). Does not include conduit fittings.	D66316-5

REF.	PIECE	DESCRIPTION	DRAWING	USED ON
2	UM154994	. Box	D66314-6	A, Aa, Ab
3	UN308578	. Cover Complete	D66314-7	A, Aa, Ab
3a	UM197578	. . Cover, Only	D66314-7	3
4	UM320227	. . Gasket	8078-1928	3
5	UN170501	. Terminal Block Complete	9968-1206	A, Aa
6	UN238637	. Terminal Block Complete with Fuse Holder . . .	9968-1323	Aa
7	UN223597	. Terminal Block Complete	9968-1250	Ab
8	UJ47818	. . Washer	7828-139	5, 6, 7
9	UM29101	. . Nut	8109-193	5, 6, 7
10	UM29103	. . Nut	8109-194	6, 7
11	UN331015	. . Fuse Holder Complete	8064-919	6
12	UJ77058	. . Terminal Block Only.	9968-1030	5
13	UJ776016	. . Terminal Block Only.	9968-1320	6
14	UM109155	. . Terminal Block Only.	9968-1255	7
15	UJ52203	. Screw, 1/4" x 1" fil. hd. steel (Cad. Pl.)		A, Aa, Ab
16	UJ47775	. Lock Washer, 1/4" steel (Cad. Pl.)		A, Aa, Ab
17	UM234466	. Washer	7826-316	A, Aa
18	UM224650	. Pedestal, 25" long, 3" inside diameter	C9181-62	A, Aa, Ab

REF.	PIECE	DESCRIPTION	DRAWING	USED ON
19	UM7309	. Washer	7826-12	A, Aa, Ab
20	UJ46557	. Tap Bolt, 1/2" x 3" sq. hd. (Cad. Pl.)		A, Aa, Ab
21	UJ48013	. Hex. Nut, 1/2" (Cad. Pl.)		A, Aa, Ab
22	UJ50053	. Cap Screw, 3/8" x 1" hex. hd. (Cad. Pl.)		A, Aa, Ab
23	UJ48010	. Hex. Jam Nut, 3/8" (Cad. Pl.)		A, Aa, Ab
24	UO376548	Fitting Complete for cable outlet application	D66316-2	A, Aa, Ab
25	UM149078	. Cable Outlet	B10342-54	24
26	UJ48417	. Lock Nut, 1-1/2"		24
27	UO376549	Fitting Complete for applications requiring 1" pipe tap opening	D66316-2	A, Aa, Ab
28	UM276521	. Reducing Bushing, 1-1/2" x 1"	9963-23	27
29	UJ48417	. Lock Nut, 1-1/2"		27
31	UO376550	Fitting Complete for ventilator application	D66316-2	A, Aa, Ab
32	UM276522	. Reducing Bushing, 1-1/2" x 1-1/4"	9663-23	31
33	UN70109	. Ventilator	7318-57	31
34	UJ48417	. Lock Nut, 1-1/2"		31
35	UJ320517	. Reducing Bushing, 1-1/4" x 1/2" galv.		31
36	UO376551	Fittings Complete for 1-1/2" split insulated conduit application	D66316-2	A, Aa, Ab
37	UM220265	. Hose Sleeve	8072-905	36
38	UM147882	. Wire Guide Plate	C8042-27	36
39	UJ50051	. Cap Screw, 3/8" x 3/4" hex. hd. (Cad. Pl.)		36
40	UJ47768	. Lock Washer, 3/8" extra heavy (Cad. Pl.)		36
41	UJ48417	. Lock Nut, 1-1/2"		36
42	UJ32229	. Hose Clamp		36
43	UA77389	. Split Tubing, 7" long		36
44	UO376552	Fitting Complete for 3/4" jake straight box connector application	D66316-2A	A, Aa, Ab
45	UM276520	. Reducing Bushing, 1-1/2" x 3/4"	9663-23	44
46	UJ48417	. Lock Nut, 1-1/2"		44
47	UJ70969	. Jake Straight Box Connector, 3/4" galv.		44
48	UO376553	Fitting Complete for 1" jake straight box connector application	D66316-2A	A, Aa, Ab
49	UM276521	. Reducing Bushing, 1-1/2" x 1"	9963-23	48
50	UJ48417	. Lock Nut, 1-1/2"		48
51	UJ70970	. Jake Straight Box Connector, 1" galv.		48
52	UO376554	Fitting Complete for 1-1/4" jake straight box connector application	D66316-2A	A, Aa, Ab
53	UM276522	. Reducing Bushing, 1-1/2" x 1-1/4"	9663-23	52

REF.	PIECE	DESCRIPTION	DRAWING	USED ON
54	UJ48417	. Lock Nut, 1-1/2"		52
55	UJ70971	. Jake Straight Box Connector, 1-1/4" galv.		52
56	UO376555	Fitting Complete for 3/8" to 1/2" O.D. cable application	D66316-2A	A, Aa, Ab
57	UM276522	. Reducing Bushing, 1-1/2" x 1-1/4"	9963-23	56
58	UJ48417	. Lock Nut, 1-1/2"		56
59	UJ320517	. Reducing Bushing, 1-1/4" x 1/2" galv.		56
60	UJ70549	. Cable Connector		56
61	UO381133	Fitting Complete for 1-1/4" hose connection application	D66316-2A	A, Aa, Ab
62	UM276521	. Reducing Bushing, 1-1/2" x 1"	9663-23	61
63	UM266799	. Sleeve	8072-996	61
64	UJ48417	. Lock Nut, 1-1/2"		61

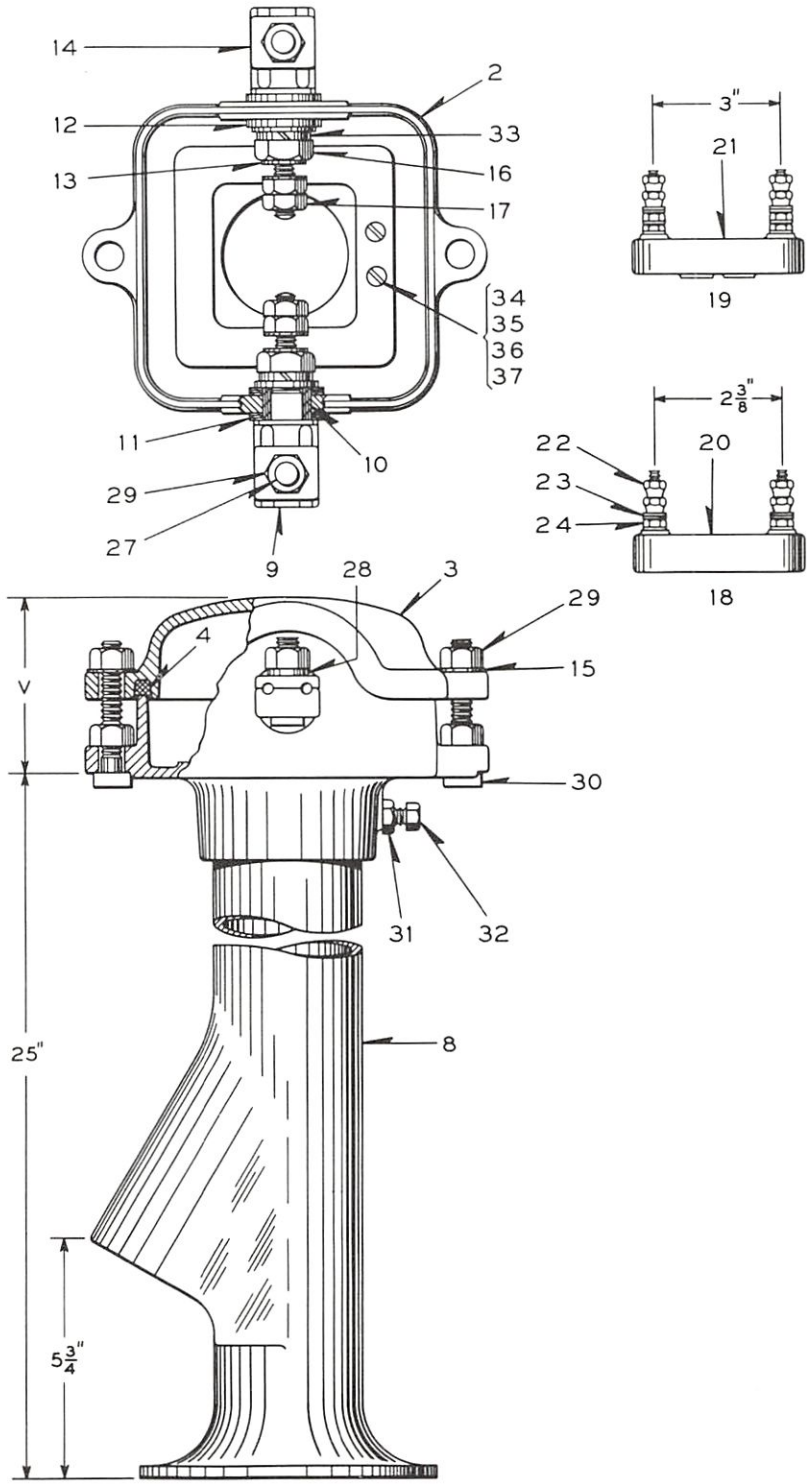

A

PEDESTAL MOUNTED HEAVY DUTY JUNCTION BOXES

PEDESTAL MOUNTED HEAVY DUTY JUNCTION BOXES

Indented item descriptions indicate that the references in the "Used On" column refer to this Plate L3-3.

Order by Plate, Reference, Piece and Abbreviated Description

REF.	PIECE	DESCRIPTION	DRAWING
A	UN381610	Heavy Duty Junction Box Complete with Pedestal. Arranged as shown. V dimension 4-1/8"	D66316-7
Aa	UN380286	Heavy Duty Junction Box Complete with Pedestal. Includes one terminal block Ref. 18 for applying USG lightning arrester. V dimension 4-1/8"	D66316-7
Ab	UN380288	Heavy Duty Junction Box Complete with Pedestal. For use with variable resistor. V dimension 5-5/16"	D66316-7
Ac	UN381622	Heavy Duty Junction Box Complete with Pedestal. Includes one terminal block Ref. 19 for applying fixed resistor. V dimension 4-1/8"	D66316-7

REF.	PIECE	DESCRIPTION	DRAWING	USED ON
2	UM199148	. Box	D66314-6	A, Aa, Ac
2a	UM258627	. Box	D66314-6	Ab
3	UN308578	. Cover Complete	D66314-7	A, Aa, Ac
3a	UN380267	. Cover Complete	D66314-11	Ab
3b	UM197578	. . Cover Only	D66314-7	3
3c	UM258623	. . Cover Only	D66314-11	3a
4	UM320227	. . Gasket	8078-1928	3, 3a
8	UM224650	. Pedestal, 25" long, 3" inside diameter	C9181-62	A thru Ac
9	UM188797	. Heavy Duty Terminal Post	B35075-6	A thru Ac
10	UM152134	. Insulating Bushing	8095-646	A thru Ac
11	UM24132	. Insulating Washer	8078-421	A thru Ac
12	UM152135	. Brass Washer	7828-346	A thru Ac
13	UM152136	. Brass Washer	7828-346	A thru Ac
14	UM188796	. Clamp Washer	8065-219	A thru Ac
15	UM7309	. Washer	7826-12	A thru Ac
16	UM152127	. Brass Nut	8109-29	A thru Ac
17	UM152128	. Brass Nut	8109-29	A thru Ac
18	UN170501	. Terminal Block Complete (For USG lightning arrester)	9968-1206	Aa

REF.	PIECE	DESCRIPTION	DRAWING	USED ON
19	UN381621	. Terminal Block Complete (For fixed resistor) . .	9968-1322	Ac
20	UJ77058	. . Terminal Block Only	9968-1030	18
21	UJ776016	. . Terminal Block Only	9968-1320	19
22	UM29101	. . Nut	8109-193	18, 19
23	UJ47818	. . Washer	7828-139	18, 19
24	UM29103	. . Nut	8109-194	18, 19
27	UJ46540	. Tap Bolt, 1/2" x 1-3/4" sq. hd. steel (Cad. Pl.).		A thru Ac
28	UJ47769	. Lock Washer, 1/2" steel (Cad. Pl.)		A thru Ac
29	UJ48013	. Hex. Nut, 1/2" steel (Cad. Pl.)		A thru Ac
30	UJ46557	. Tap Bolt, 1/2" x 3" sq. hd. steel (Cad. Pl.) . . .		A thru Ac
31	UJ48010	. Hex. Jam Nut, 3/8" steel (Cad. Pl.)		A thru Ac
32	UJ50053	. Cap Screw, 3/8" x 1" hex. hd. steel (Cad. Pl.). .		A thru Ac
33	UJ47627	. Lock Washer, 3/4" steel (Cad. Pl.)		A thru Ac
34	UJ52504	. Screw, 1/4" x 3/8" rd. hd. steel (Cad. Pl.). Used for plugging excess holes		A
35	UJ52203	. Screw, 1/4" x 1" fil. hd. steel (Cad. Pl.). For attaching terminal blocks to box		Aa, Ac
36	UM234466	. Washer		Aa, Ac
37	UJ47775	. Lock Washer, 1/4" steel (Cad. Pl.)		Aa, Ac
38	UJ52357	. Screw, No. 12 - 28 x 1-1/2" fil. hd. steel (Cad. Pl.). For attaching variable resistor to box (Not Shown)		Ab
39	UM224338	. Felt Washer. For use under variable resistor (Not Shown)		Ab

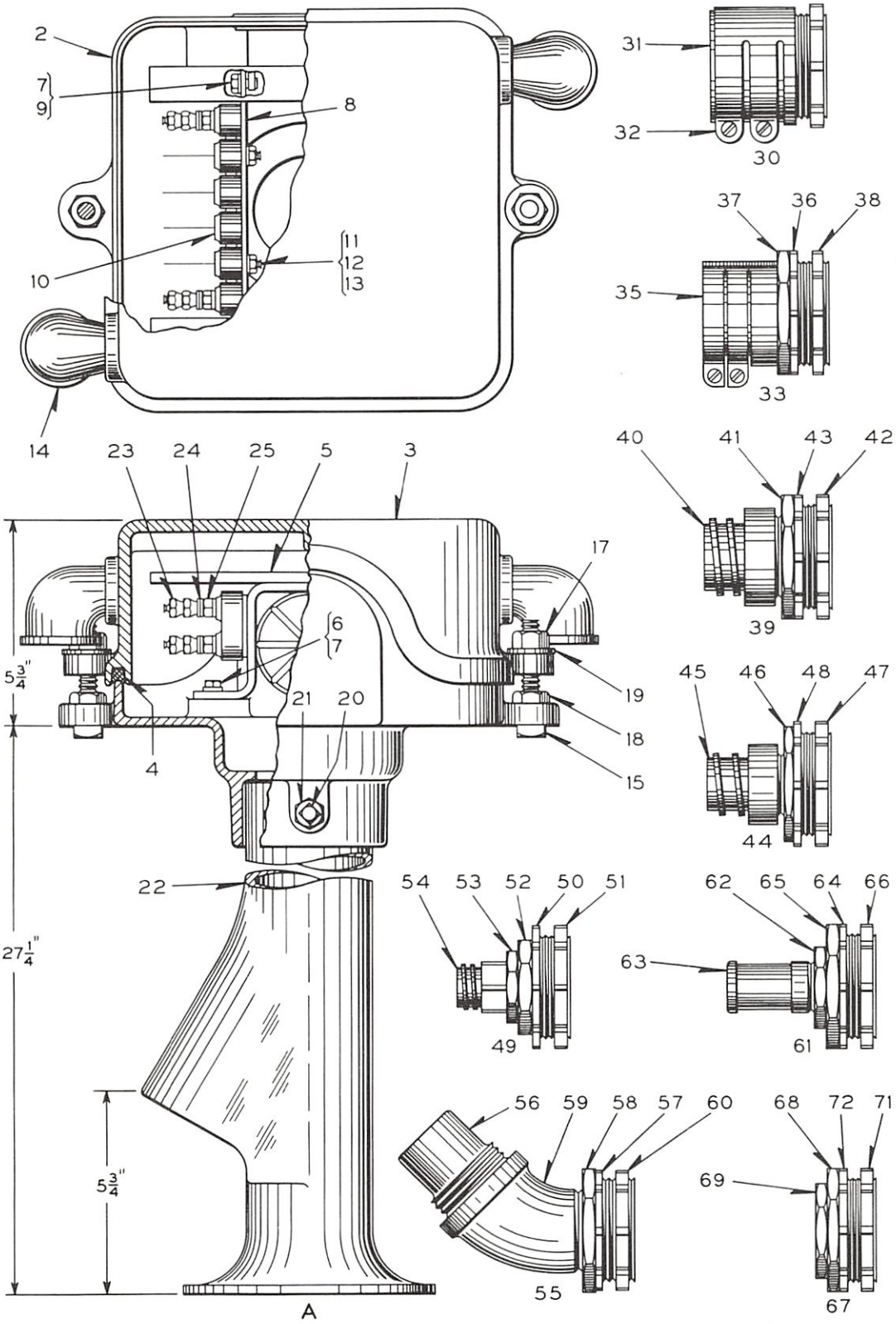

PEDESTAL MOUNTED JUNCTION BOXES
(12 OR 24 TERMINALS)

PEDESTAL MOUNTED JUNCTION BOXES
12 OR 24 TERMINALS

Junction Boxes listed below do not include fittings Refs. 30 to 72 inclusive. If desired, fittings must be ordered separately.

Indented item descriptions indicate that the references in the "Used On" column refer to this Plate L3-4.

Order by Plate, Reference, Piece and Abbreviated Description

REF.	PIECE	DESCRIPTION	DRAWING
A	UN374992	Junction Box Complete with Pedestal. Includes one Terminal Block Ref. 10 (12 terminals). Does not include conduit fittings .	D66316-6
Aa	UN374993	Junction Box Complete with Pedestal. Includes two Terminal Blocks Ref. 10 (24 terminals). Does not include conduit fittings.	D66316-6

REF.	PIECE	DESCRIPTION	DRAWING	USED ON
2	UM374986	. Box	D66314-8	A, Aa
3	UM374987	. Cover	D66314-9	A, Aa
4	UM320227	. Gasket	8078-1928	A, Aa
5	UR374989	. Terminal Block Support	B35024-34	A, Aa
6	UJ50013	. Cap Screw, 1/4" x 5/8" hex. hd. steel (Tin Pl.)		A, Aa
7	UJ47775	. Lock Washer, 1/4" steel (Tin Pl.)		A, Aa
8	UM347476	. Mounting Plate	B35028-16	A, Aa
9	UJ50012	. Cap Screw, 1/4" x 1/2" hex. hd. steel (Tin Pl.)		A, Aa
10	UJ77873	. Terminal Block	9968-1074	A, Aa
11	UJ52298	. Screw, No. 10 - 32 x 3/4" fil. hd. steel (Tin Pl.).		A, Aa
12	UJ47733	. Lock Washer, No. 10 steel (Tin Pl.)		A, Aa
13	UJ48172	. Hex. Nut, No. 10-32 steel (Tin Pl.)		A, Aa
14	UN185702	. Ventilator	7318-82	A, Aa
15	UJ46557	. Tap Bolt, 1/2" x 3" sq. hd. steel (Cad Pl.). . . .		A, Aa
17	UJ48016	. Hex. Jam Nut, 1/2" steel (Cad. Pl.)		A, Aa
18	UJ48013	. Hex. Nut, 1/2" steel (Cad. Pl.)		A, Aa
19	UJ47503	. Washer, 1/2" steel (Cad. Pl.)		A, Aa
20	UJ50577	. Set Screw, 3/8" x 1-1/4" (Cad. Pl.)		A, Aa
21	UJ48009	. Hex. Nut, 3/8" steel (Cad. Pl.)		A, Aa
22	UM224650	. Pedestal, 25" long, 3" inside diameter	C9181-62	A, Aa
23	UM29101	. Nut	8109-193	A, Aa

REF.	PIECE	DESCRIPTION	DRAWING	USED ON
24	UJ47818	. Washer	7828-139	A, Aa
25	UM29103	. Nut	8109-194	A, Aa
30	UO347806	Fittings Complete for 2" insulated conduit application	D66316-2	A, Aa
31	UJ75485	. Insulating Bushing	8095-815	30
32	UJ70617	. Box Connector, 2-1/2" galv.		30
33	UO376556	Fittings Complete for 1-1/2" insulated conduit application	D66316-2A	A, Aa
34	UJ77918	. Insulating Bushing (not shown)	8095-705	33
35	UJ70608	. Box Connector, 2" galv.		33
36	UM373656	. Lock Nut	B35031-4	33
37	UJ32088	. Reducing Bushing, 2-1/2" x 2" galv.		33
38	UJ48419	. Lock Nut, 2-1/2".		33
39	UO347807	Fittings Complete for 2" conduit application	D66316-2	A, Aa
40	UJ70973	. Jake Straight Box Connector, 2"		39
41	UJ32088	. Reducing Bushing, 2-1/2" x 2" galv.		39
42	UJ48419	. Lock Nut, 2-1/2".		39
43	UM373656	. Lock Nut	B35031-4	39
44	UO372316	Fittings Complete for 1-1/2" conduit application	D66316-2	A, Aa
45	UJ70972	. Jake Straight Box Connector, 1-1/2"		44
46	UJ32060	. Reducing Bushing, 2-1/2" x 1-1/2" galv.		44
47	UJ48419	. Lock Nut, 2-1/2".		44
48	UM373656	. Lock Nut	B35031-4	44
49	UO382688	Fittings Complete for 1" conduit application	D66316-2A	A, Aa
50	UM373656	. Lock Nut	B35031-4	49
51	UJ48419	. Lock Nut, 2-1/2".		49
52	UJ32060	. Reducing Bushing, 2-1/2" x 1-1/2" galv.		49
53	UJ32044	. Reducing Bushing, 1-1/2" x 1" galv.		49
54	UJ70970	. Jake Straight Box Connector, 1"		49
55	UO382904	Fittings Complete for 2" hose application	D66316-2	A, Aa
56	UM256315	. Sleeve	8065-231	55
57	UM373656	. Lock Nut	B35031-4	55
58	UJ32088	. Reducing Bushing, 2-1/2" x 2" galv.		55
59	UJ32603	. Street Ell, 2" - 45° galv.		55
60	UJ48419	. Lock Nut, 2-1/2".		55
61	UO383074	Fittings Complete for 1-1/4" hose connection application	D66316-2A	A, Aa
62	UM276521	. Reducing Bushing, 1-1/2" x 1"	9663-23	61

REF.	PIECE	DESCRIPTION	DRAWING	USED ON
63	UM266799	. Sleeve	8072-996	61
64	UM373656	. Lock Nut	B35031-4	61
65	UJ32060	. Reducing Bushing, 2-1/2" x 1-1/2" galv.		61
66	UJ48419	. Lock Nut, 2-1/2".		61
67	UO382981	Fittings Complete for applications requiring 1-1/4" pipe tap opening	D66316-2A	A, Aa
68	UJ32088	. Reducing Bushing, 2-1/2" x 2" galv.		67
69	UJ32054	. Reducing Bushing, 2" x 1-1/4" galv.		67
71	UJ48419	. Lock Nut, 2-1/2".		67
72	UM373656	. Lock Nut	B35031-4	67

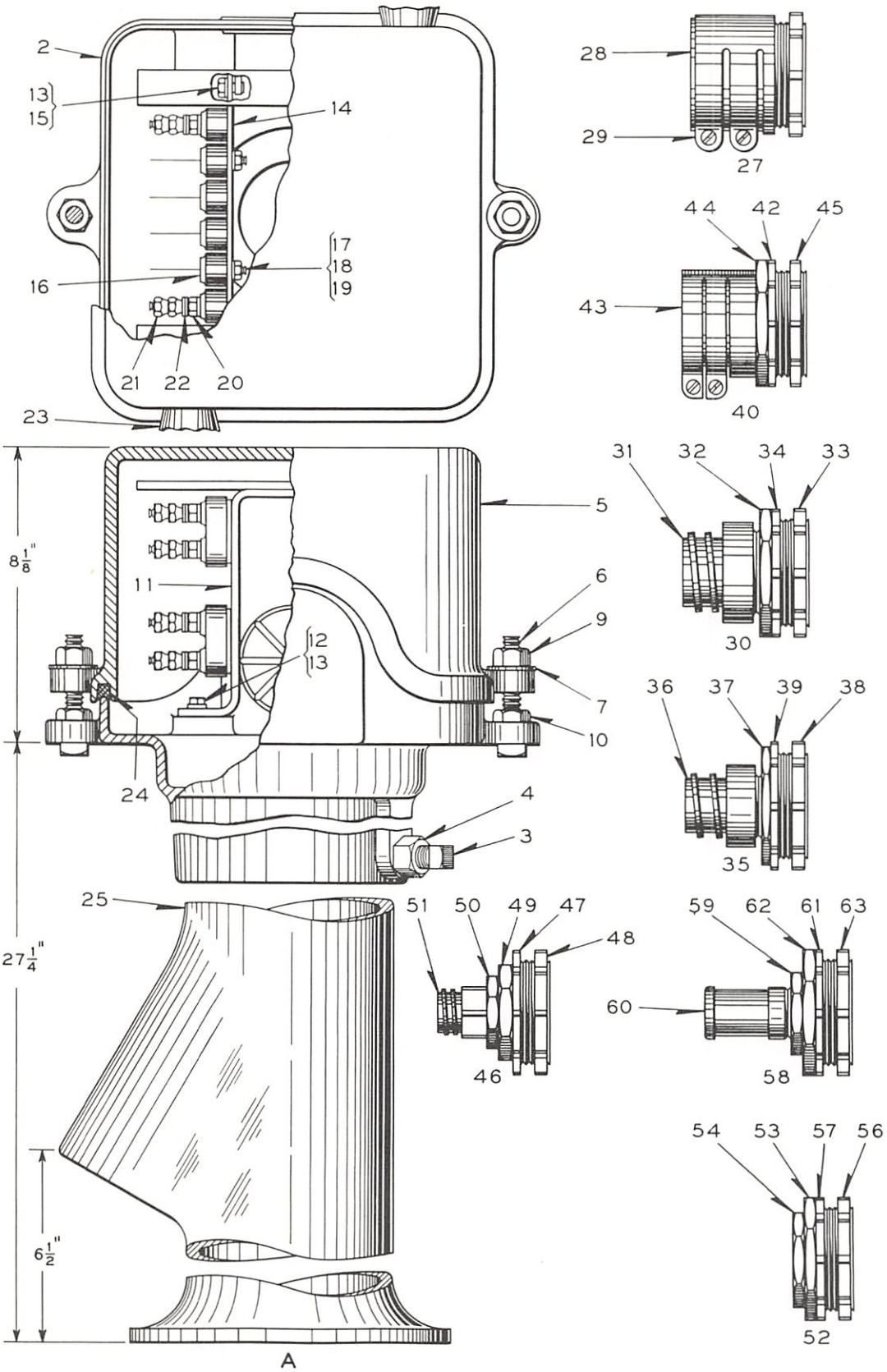

PEDESTAL MOUNTED JUNCTION BOX
(48 TERMINALS)

PEDESTAL MOUNTED JUNCTION BOX
48 TERMINALS

Junction Box listed below does not include fittings Refs. 27 to 63 inclusive. If desired, fittings must be ordered separately.

Indented item descriptions indicate that the references in the "Used On" column refer to this Plate L3-5.

Order by Plate, Reference, Piece and Abbreviated Description

REF.	PIECE	DESCRIPTION	DRAWING
A	UN349656	Junction Box Complete with Pedestal. Includes four Terminal Blocks Ref. 16 (48 terminals). Does not include conduit fittings	D66316-1

REF.	PIECE	DESCRIPTION	DRAWING	USED ON
2	UM347722	. Box	D66314-2	A
3	UJ50601	. Set Screw, 5/8" x 1-3/4" sq. hd. cup point (Cad. Pl.)		A
4	UJ48021	. Hex. Nut, 5/8" steel (Cad. Pl.)		A
5	UM347723	. Cover	D66314-3	A
6	UJ46557	. Tap Bolt, 1/2" x 3" sq. hd. steel (Cad. Pl.)		A
7	UJ47503	. Plate Washer, 1/2" steel (Cad. Pl.)		A
9	UJ48016	. Hex. Jam Nut, 1/2" steel (Cad. Pl.)		A
10	UJ48013	. Hex. Nut, 1/2" steel (Cad. Pl.)		A
11	UR347473	. Terminal Block Support	10914-3576	A
12	UJ50013	. Cap Screw, 1/4" x 5/8" hex. hd. steel (Tin Pl.)		A
13	UJ47775	. Lock Washer, 1/4" steel (Tin Pl.)		A
14	UM347476	. Mounting Plate	B35028-16	A
15	UJ50012	. Cap Screw, 1/4" x 1/2" hex. hd. steel (Tin Pl.)		A
16	UJ77873	. Terminal Block	9968-1074	A
17	UJ52298	. Screw, No. 10 - 32 x 3/4" fil. hd. steel (Tin Pl.)		A
18	UJ47733	. Lock Washer, No. 10 steel (Tin Pl.)		A
19	UJ48172	. Hex. Nut, No. 10 - 32 steel (Tin Pl.)		A
20	UM29103	. Nut	8109-194	A
21	UM29101	. Nut	8109-193	A
22	UJ47818	. Washer	7828-139	A

REF.	PIECE	DESCRIPTION	DRAWING	USED ON
23	UN185702	. Ventilator	7318-82	A
24	UM320227	. Gasket (Orders should specify length desired)	8078-1928	A
25	UM347484	. Pedestal, 25" long, 5" inside diameter	D66314-1	A
27	UO347806	Fitting Complete for 2" insulated conduit application	D66316-2	A
28	UJ75485	. Insulating Bushing	8095-815	27
29	UJ70617	. Box Connector, 2-1/2" galv.		27
30	UO347807	Fitting Complete for 2" conduit application	D66316-2	A
31	UJ70973	. Jake Straight Box Connector, 2"		30
32	UJ32088	. Reducing Bushing, 2-1/2" x 2" galv.		30
33	UJ48419	. Lock Nut, 2-1/2"		30
34	UM373656	. Lock Nut	B35031-4	30
35	UO372316	Fitting Complete for 1-1/2" conduit application	D66316-2	A
36	UJ70972	. Jake Straight Box Connector, 1-1/2"		35
37	UJ32060	. Reducing Bushing, 2-1/2" x 1-1/2" galv.		35
38	UJ48419	. Lock Nut, 2-1/2"		35
39	UM373656	. Lock Nut	B35031-4	35
40	UO376556	Fitting Complete for 1-1/2" insulated conduit application	D66316-2A	A
41	UJ77918	. Insulating Bushing (Not Shown)	8095-705	40
42	UM373656	. Lock Nut	B35031-4	40
43	UJ70608	. Box Connector, 2" galv.		40
44	UJ32088	. Reducing Bushing, 2-1/2" x 2" galv.		40
45	UJ48419	. Lock Nut, 2-1/2"		40
46	UO382688	Fitting Complete for 1" conduit application	D66316-2A	A
47	UM373656	. Lock Nut	B35031-4	46
48	UJ48419	. Lock Nut, 2-1/2"		46
49	UJ32060	. Reducing Bushing, 2-1/2" x 1-1/2" galv.		46
50	UJ32044	. Reducing Bushing, 1-1/2" x 1" galv.		46
51	UJ70970	. Jake Straight Box Connector, 1"		46
52	UO382981	Fitting Complete for applications requiring 1-1/4" pipe tap opening	D66316-2A	A
53	UJ32088	. Reducing Bushing, 2-1/2" x 2" galv.		52
54	UJ32054	. Reducing Bushing, 2" x 1-1/4" galv.		52
56	UJ48419	. Lock Nut, 2-1/2"		52
57	UM373656	. Lock Nut	B35031-4	52
58	UO383074	Fitting Complete for 1-1/4" hose connection application	D66316-2A	A

REF.	PIECE	DESCRIPTION	DRAWING	USED ON
59	UM276521	. Reducing Bushing, 1-1/2" x 1"	9663-23	58
60	UM266799	. Sleeve	8072-996	58
61	UM373656	. Lock Nut	B35031-4	58
62	UJ32060	. Reducing Bushing, 2-1/2" x 1-1/2" galv.		58
63	UJ48419	. Lock Nut, 2-1/2"		58

COMBINED BASE AND JUNCTION BOX FOR GROUND AND BRIDGE SIGNALS

In railway signaling various type pole bases with junction boxes are required to provide a means of terminating wiring to the various type signals. The combined base and junction box is available in two sizes: for application to 4" pipe posts or 5" pipe posts. For junction box base for application to 6" pipe see Catalog Plate L3-101.

APPLICATION

The design is applicable for terminating wiring to search light ground or bridge signals, color light ground or bridge signals and highway crossing signals.

FEATURES

Material: Bases and junction box cover are cast iron.

Easy accessibility for cable checks and trouble-shooting.

Packing is provided in the cover to seal the terminal compartment against weather elements and foreign particles.

Cover on junction box for 5" pipe is arranged for padlocking (Cat. Pl. L3-52).

Elbow type ventilators, equipped with fine mesh screen, are used to provide air circulation and consequently minimize condensation inside the junction box.

Space is provided at bottom of terminal compartment for pot-heading and sealing incoming cables.

TERMINAL BLOCKS

Terminals are A.A.R. type (#14-24), on 1" centers, molded in blocks of bakelite insulation. Terminal nuts are accessible for socket wrench application.

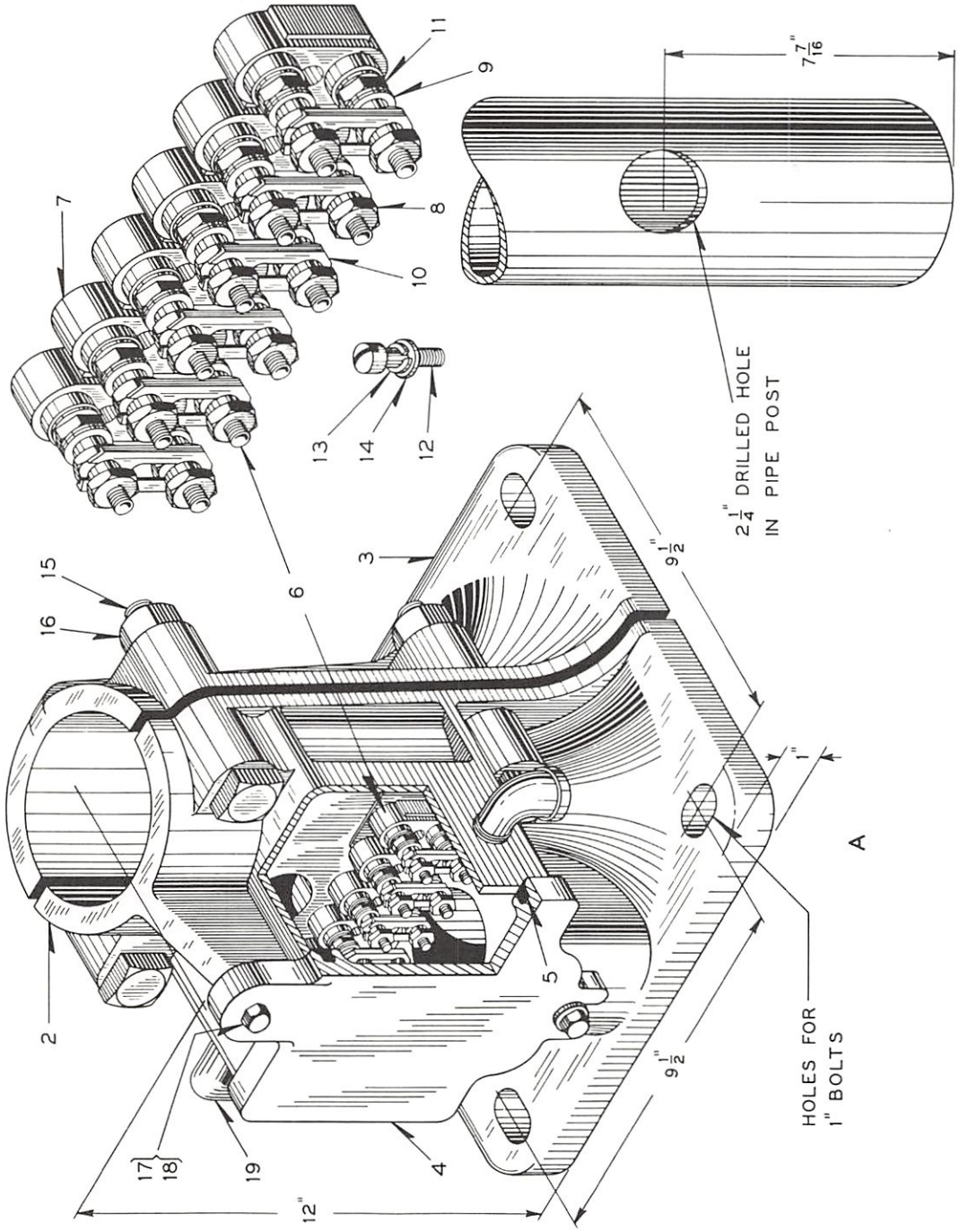

COMBINED BASE AND JUNCTION BOX FOR 4" PIPE
FOR GROUND SIGNALS

COMBINED BASE AND JUNCTION BOX FOR 4" PIPE FOR GROUND SIGNALS 12 OR 24 TERMINALS

Indented item descriptions indicate that the references in the "Used On" column refer to this Plate L3-51.

Order by Plate, Reference, Piece and Abbreviated Description

REF.	PIECE	DESCRIPTION	DRAWING
A	UN215037	Combined Base and Junction Box Complete with one Terminal Block Ref. 6 (12 terminals). For 4" pipe post. (Includes 1-2, and 1-3, 4-15, 4-16)	C6634-12
Aa	UN215039	Combined Base and Junction Box Complete with two Terminal Blocks Ref. 6 (24 terminals). For 4" pipe post. (Includes 2-2, 4-15, 4-16)	C6634-12

REF.	PIECE	DESCRIPTION	DRAWING	USED ON
2	UM194141	. Half Base with Junction Box Only for 4" pipe	C6634-12	A, Aa
3	UM191265	. Half Base Only, for 4" pipe	C6634-11	A
4	UN219673	. Junction Box Cover Complete	C6634-17	A, Aa
4a	UM103465	. . Junction Box Cover Only	C6634-17	4
5	UA67069	. . Gasket, 3/8" sq. 2'-1" long		4
6	UN178389	. Terminal Block Complete	9968-1075	A, Aa
7	UJ77873	. . Terminal Block Only	9968-1074	6
8	UM29101	. . Nut	8109-193	6
9	UJ47818	. . Washer	7828-139	6
10	UM56224	. . Terminal Connector	8064-348	6
11	UM29103	. . Nut	8109-194	6
12	UJ52298	. Machine Screw, No. 10 - 32 x 3/4" fil. hd. steel (Tin Pl.)		A, Aa
13	UJ47733	. Lock Washer, No. 10 plain steel (Tin Pl.)		A, Aa
14	UM1564	. Washer	8112-1	A, Aa
15	UJ46740	. Bolt, 3/4" x 5-1/2" sq. hd. (Cad. Pl.)		A, Aa
16	UJ48026	. Hex. Nut, 3/4" (Cad. Pl.)		A, Aa
17	UJ50092	. Cap Screw, 1/2" x 13"x 1-1/2" hex. hd. steel (Cad. Pl.) for attaching Terminal Block		A, Aa
18	UJ47503	. Plate Washer 1/2" steel (Cad. Pl.)		A, Aa
19	UN70109	. Ventilator	7318-57	A, Aa

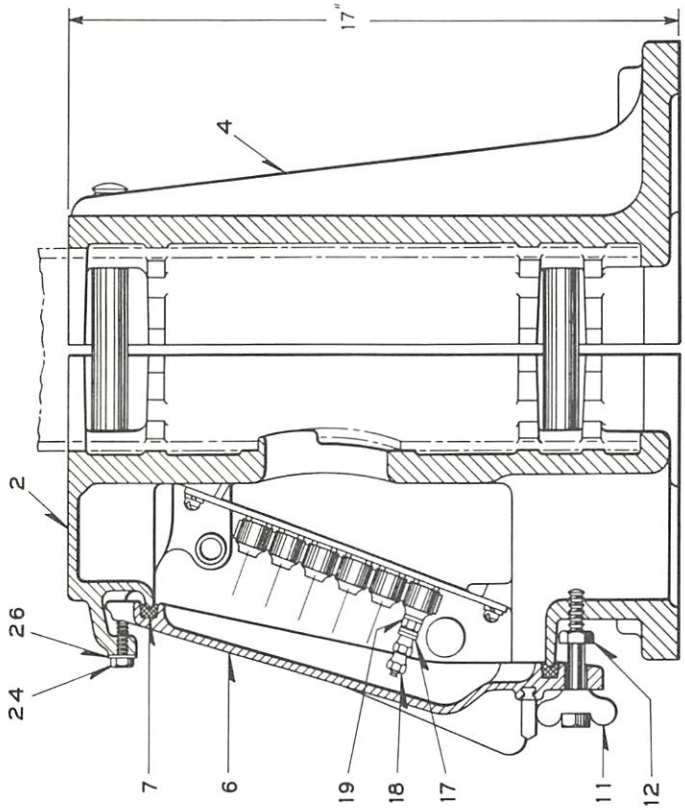

A

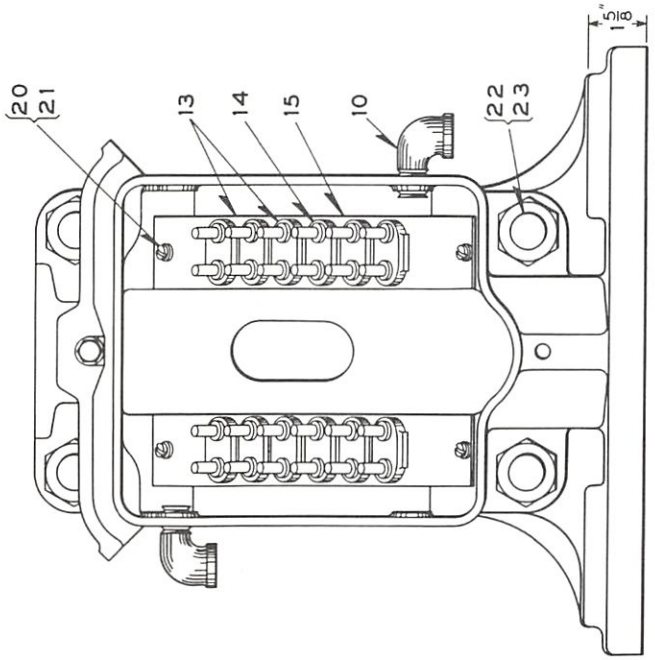

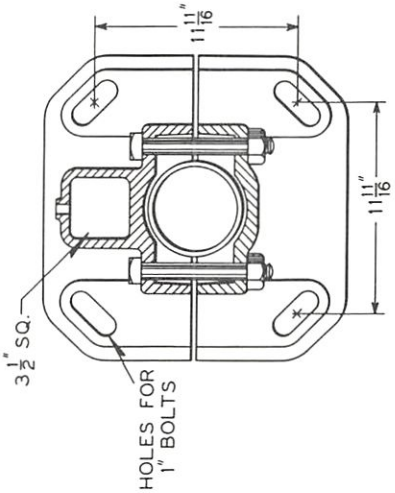

COMBINED BASE AND JUNCTION BOX FOR 5" PIPE
FOR GROUND AND BRIDGE SIGNALS

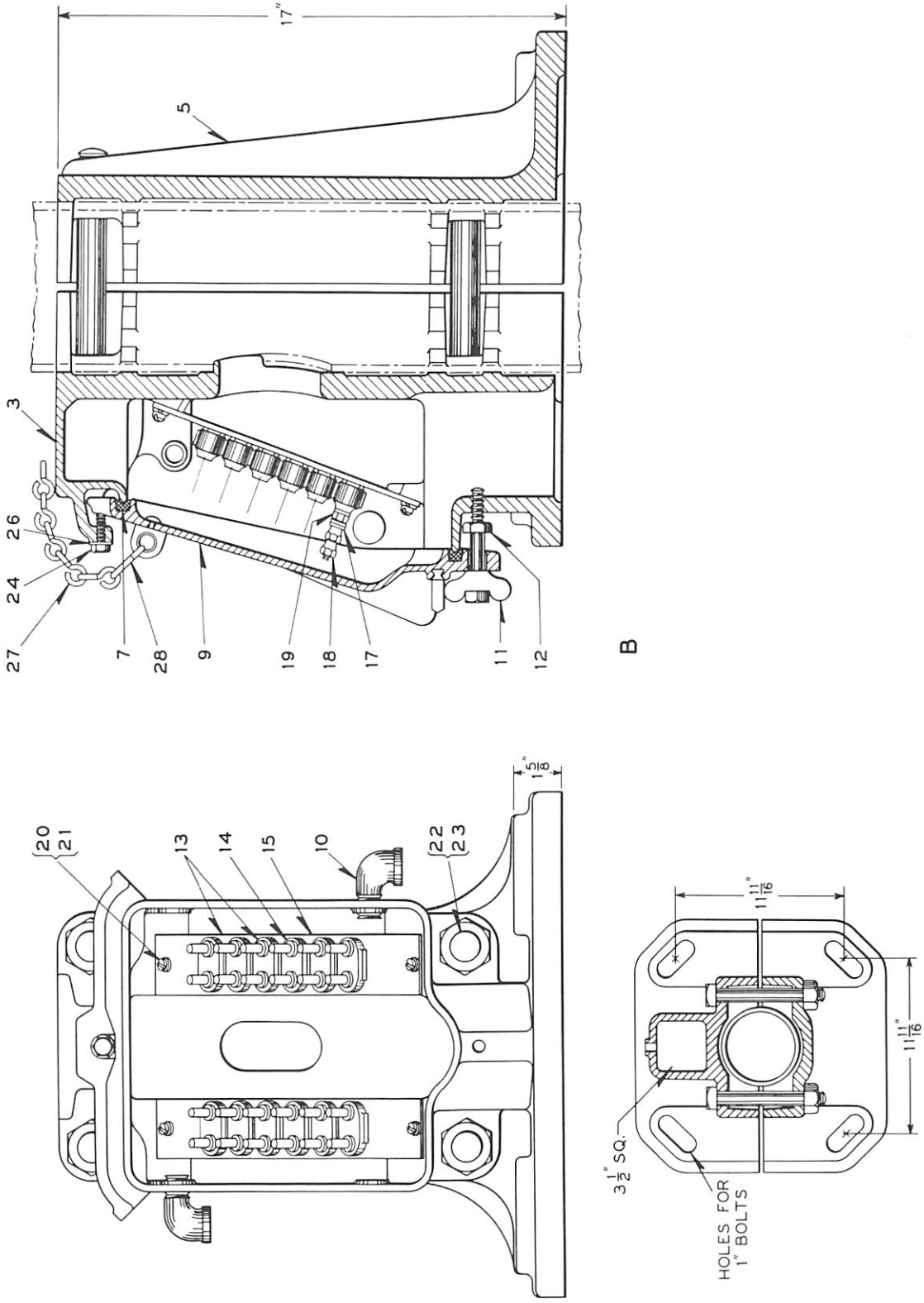

COMBINED BASE AND JUNCTION BOX FOR 5" PIPE
FOR GROUND AND BRIDGE SIGNALS

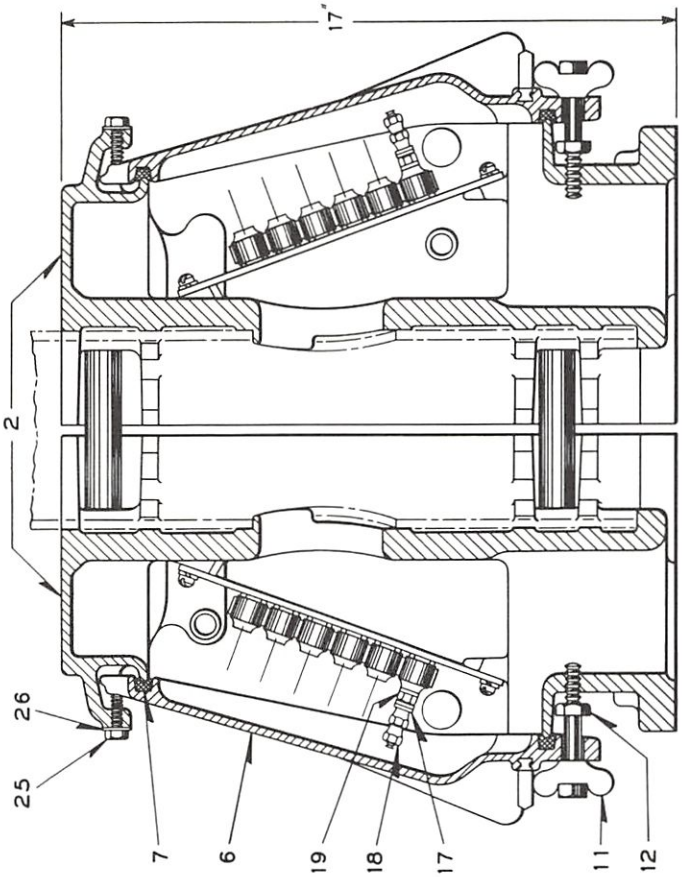

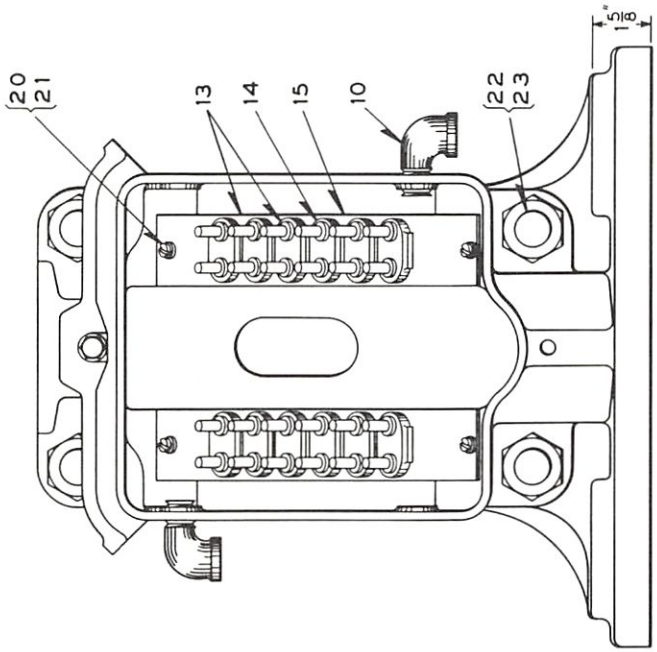

C

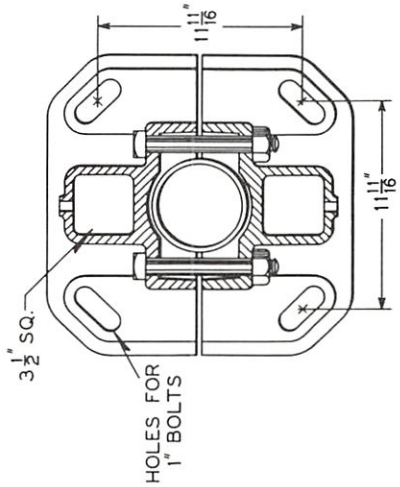

COMBINED BASE AND JUNCTION BOX FOR 5" PIPE
FOR GROUND AND BRIDGE SIGNALS

COMBINED BASE AND JUNCTION BOX FOR 5" PIPE FOR GROUND AND BRIDGE SIGNALS 24 OR 48 TERMINALS

Indented item descriptions indicate that the references in the "Used On" column refer to this Plate L3-52.

Order by Plate, Reference, Piece and Abbreviated Description

REF.	PIECE	DESCRIPTION	DRAWING
A	UN221966	Combined Base and Junction Box complete with two Terminal Blocks, Ref. 13 (24 terminals). For 5" pipe post for ground or bridge mounting, all signal units above base. (Includes clamping bolts).	C6634-25
B	UN262056	Combined Base and Junction Box complete with two Terminal Blocks, Ref. 13 (24 terminals). For 5" pipe post for bridge mounting, with suspended signal units. (Includes clamping bolts)	C6634-32
Ba	UN304789	Combined Base and Junction Box complete with two Terminal Blocks, Ref. 13 (24 terminals). For 5" pipe post for bridge mounting, with suspended signal units. (With 2" pipe tapped holes on both sides of Junction Box). (Includes clamping bolts)	C6634-32
C	UN214857	Combined Base and Two Junction Boxes complete with four Terminal Blocks, Ref. 13 (48 terminals). For 5" pipe post for ground or bridge mounting, all signal units above base. (Includes clamping bolts)	C6634-24

REF.	PIECE	DESCRIPTION	DRAWING	USED ON
2	UM214856	. Half Base with Junction Box	C6634-23	A, C
3	UM230688	. Half Base with Junction Box	C6634-23	B
3a	UM304788	. Half Base with Junction Box	C6634-28	Ba
4	UM107059	. Half Base	C6634-19	A
5	UM238728	. Half Base	C6634-19	B, Ba
6	UN228226	. Cover Complete	C6634-21	A, C
6a	UM107061	. . Cover Only	C6634-21	6
7	UA67069	. . Gasket, (Orders should specify length desired) .		6, 9
9	UN230709	. Cover Complete with staple (Does not include gasket)	C6634-21	B, Ba
10	UN70109	. Ventilator	7318-57	A, B, Ba C
11	UN107065	. Thumb Screw	8331-83	A, B, Ba C

REF.	PIECE	DESCRIPTION	DRAWING	USED ON
12	UJ48016	. Hex. Jam Nut, 1/2" steel (Cad. Pl.)		A, B, Ba C
13	UN108439	. Terminal Board Complete	C6634-22	A, B, Ba C
14	UJ77873	. . Terminal Board Only.	9968-1074	13
15	UM220175	. . Mounting Plate	C6634-27	13
16	UJ52466	. . Screw, No. 10 - 32 x 9/16" fil. hd. steel (Tin Pl.). For attaching Terminal Board to Mounting Plate (Not Shown)		13
17	UJ47818	. . Washer	7828-139	13
18	UM29101	. . Nut	8109-193	13
19	UM29103	. . Nut	8109-194	13
20	UJ52505	. Screw, 1/4" x 20 x 5/8" rd. hd. steel (Tin Pl.) . .		A, B, Ba, C
21	UJ47775	. Lock Washer, 1/4" steel (Tin Pl.)		A, B, Ba, C
22	UJ46799	. Bolt, 1" - 8 x 7-1/2" sq. hd. steel (Cad. Pl.). . . .		A, B, Ba, C
23	UJ48030	. Hex. Nut, 1" (Cad. Pl.)		A, B, Ba, C
24	UJ50053	. Cap Screw, 3/8" x 1" hex. hd. (Cad. Pl.)		A, B, Ba
25	UJ50052	. Cap Screw, 3/8" x 7/8" hex. hd. (Cad. Pl.).		C
26*	UM62222	. Washer, .0375" thick	7826-180	A, B, Ba, C
26a*	UM33010	. Washer, 1/16" thick	7826-89	A, B, Ba, C
27	UA61109	. Single Jack Chain No. 8, 40 links		B, Ba
28	UJ56179	. S Hook, 1".		B, Ba

* Use as required to obtain desired compression

JUNCTION BOX FOR MOUNTING ON SOCKET BASES FOR 6" PIPE POST

The junction box for mounting on socket bases of ground signals was designed to meet the requirements of providing a satisfactory means of terminating cables at the base of 6" pipe posts.

The junction box is provided with a 2-1/4" x 4" opening in the bottom through which cables enter the junction box. A 2" by 4" opening is provided in the back of the box for wiring running to the signal case. Both of these openings coincide with holes in the base.

APPLICATION

For terminating wiring at the base of 6" pipe signal posts.

FEATURES

Material: Junction box and cover are cast iron.

Easy accessibility for cable checks and trouble-shooting.

Space is provided at bottom of terminal compartment for pot-heading and sealing incoming cables.

Cover is arranged for padlocking and is hinged to open downward and lie open in a horizontal position thereby providing convenient tool space when working on the terminals.

Packing is provided in the cover to seal the terminal compartment against weather elements and foreign particles. A gasket seal is provided on the opening at back of terminal compartment where cables leave the junction box to enter the signal post through the socket base.

A tapped boss with 1" pipe plug, is provided in each side of the box for the insertion of ventilators, if service conditions indicate that they are necessary.

TERMINAL BLOCKS

Terminals are A.A.R. type (#14-24), on 1" centers, molded in blocks of bakelite insulation. Terminal nuts are accessible for socket wrench application.

FITTINGS

The base of the junction box is designed to rest on a boss on the socket base and to be clamped to the side of the socket base with hook bolts.

Clamping fittings are not included and must be ordered separately, if desired.

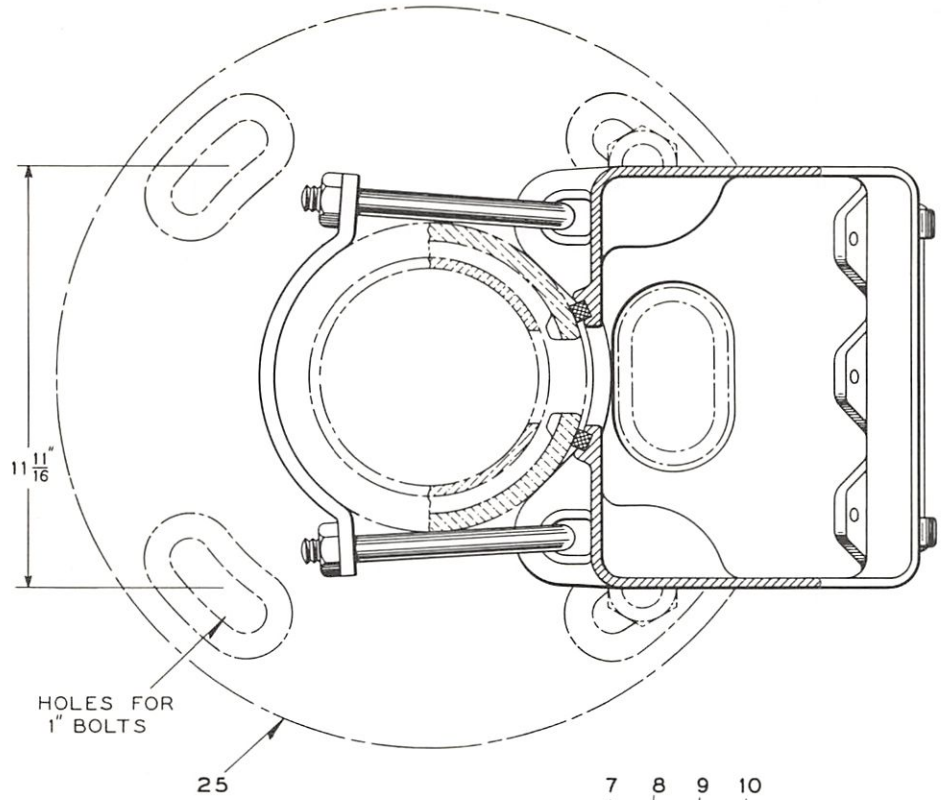

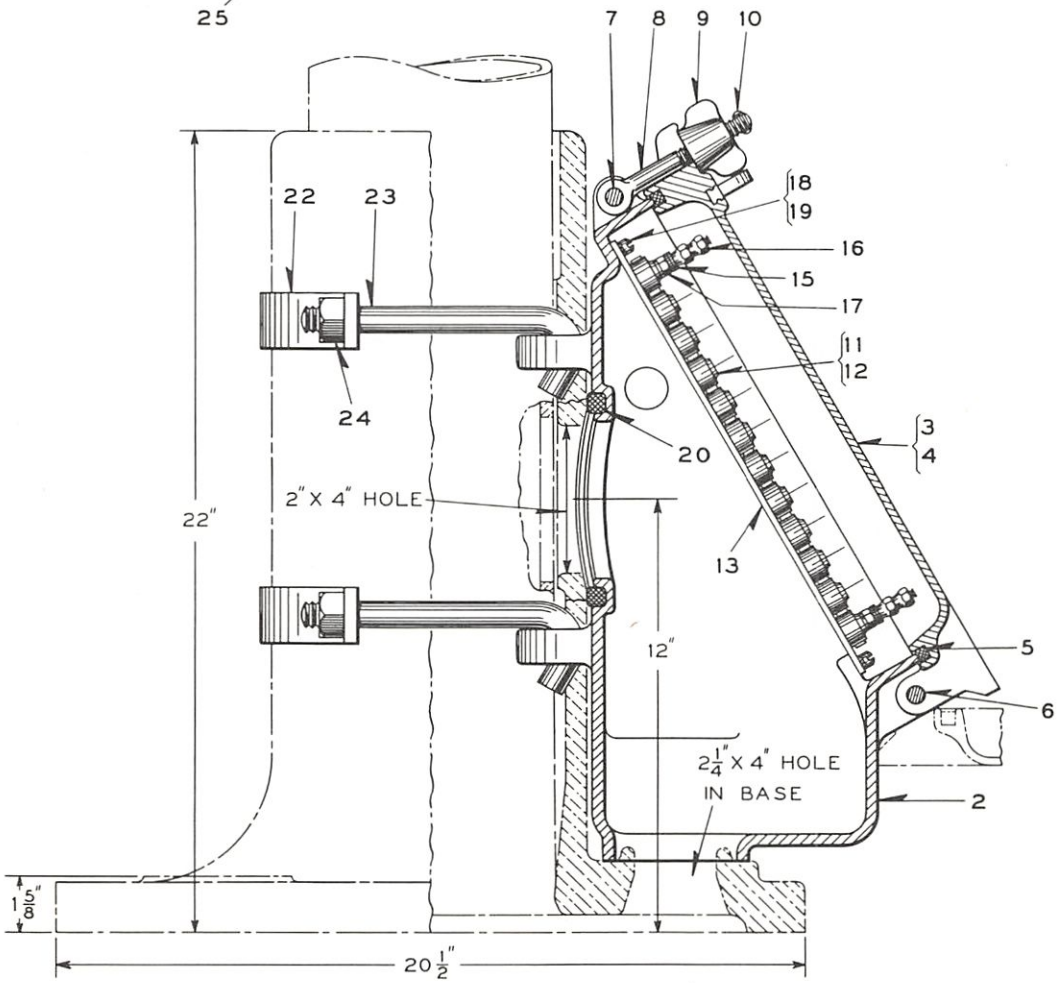

A

JUNCTION BOX FOR MOUNTING ON SOCKET BASES
FOR 6" PIPE

JUNCTION BOX FOR MOUNTING ON SOCKET BASES FOR 6" PIPE POST

Socket Base, Ref. 25 is not included.
It must be ordered separately, if desired.

Indented item descriptions indicate that the references in the "Used On" column refer to this Plate L3-101.

Order by Plate, Reference, Piece and Abbreviated Description

REF.	PIECE	DESCRIPTION	DRAWING
A	UO384947	Junction Box Complete with one Terminal Block (24 terminals). For mounting on socket base for 6" pipe. Includes fittings, Refs. 22 thru 24 inclusive but does not include socket base, Ref. 25	D66316-8
Aa	UO384946	Junction Box Complete with two Terminal Blocks (48 terminals). For mounting on socket base for 6" pipe. Includes fittings, Refs. 22 thru 24 inclusive but does not include socket base, Ref. 25	D66316-8
Ab	UN212958	Junction Box Complete with one Terminal Block (24 terminals). For mounting on socket base for 6" pipe. Does not include fittings and socket base, Refs. 22 thru 25 inclusive	D66316-8
Ac	UN104478	Junction Box Complete with two Terminal Blocks (48 terminals). For mounting on socket base for 6" pipe. Does not include fittings and socket base, Refs. 22 thru 25 inclusive	D66316-8

REF.	PIECE	DESCRIPTION	DRAWING	USED ON
2	UM104291	. Box	C9181-55	A, Aa
3	UN269746	. Cover Complete	C9181-56	A, Aa
4	UM104292	. . Cover Only	C9181-56	3
5	UA67069	. . Gasket, 3/8" sq. 4' - 2-5/8" long		3
6	UM134534	. Hinge Pin	B10213-1	A, Aa
7	UM177457	. Pin	B10213-1	A, Aa
8	UM104404	. Eye Bolt	8034-233	A, Aa
9	UM210979	. Wing Nut	8331-72	A, Aa
10	UJ49433	. Rivet, 3/16" x 5/8" rd. hd.	D66314-10	A, Aa
11	UN379736	. Terminal Block Complete	D66314-10	A, Aa
12	UJ77873	. . Terminal Block Only	9968-1074	11
13	UM379735	. . Mounting Plate	D66314-10	11
14	UJ52466	. . Screw, No. 10 - 32 x 9/16" fil. hd. steel (Tin Pl.) for attaching Terminal Block (Not Shown).		11
15	UJ47818	. . Washer	7828-139	11

REF.	PIECE	DESCRIPTION	DRAWING	USED ON
16	UM29101	. . Nut	8109-193	11
17	UM29103	. . Nut	8109-194	11
18	UJ52204	. Screw, 1/4" x 20 x 5/8" fil. hd. steel (Tin Pl.) .		A, Aa
19	UJ47775	. Lock Washer, 1/4" steel (Tin Pl.)		A, Aa
20	UA67035	. Gasket, 1/2" sq. x 14-1/2" long		A, Aa
21	UJ32907	. 1" Cast Iron Pipe Plug (Not Shown)		A, Aa
22	UM104294	Bracket	10914-944	A, Aa
23	UM104873	Hook Bolt	7813-390	A, Aa
24	UJ48026	Hex. Nut, 3/4" (Cad. Pl.)		A, Aa
25	UM106144	Socket Base, for 6" pipe	C6782-16	A, Aa

JUNCTION BOXES FOR MOUNTING ON SIDE OF 3" TO 8" PIPE POST 24 TERMINALS

The junction box for application to the side of various size pipe posts is another means of terminating cables to various ground signal installations. This particular design is for pole mounting of junction boxes, with the junction box being mounted directly to the side of pole with U-bolts.

The junction box is available in two types: one for application to 3" to 6" pipe inclusive, with one hole in the back for wire entrance into the pipe post; and one for application to 4" to 8" pipe inclusive, with two holes in the back for wire entrance into the pipe post.

APPLICATION

For terminating wiring above the base of the signal pole, in lieu of using a combined base and junction box and terminating wiring in the base.

FEATURES

Material: Box and cover are cast iron.

Easy accessibility for cable checks and trouble-shooting.

Cover is arranged for padlocking.

A gasket seal is provided on the opening (or openings) in the back of terminal compartment where cables enter the pipe post.

TERMINAL BLOCKS

The terminal board arrangement consists of a plywood board on which are mounted two multiple unit terminal blocks, 12 terminals each on 1" centers. The two terminal blocks are mounted on the plywood board, face to face, assembled with a full complement of terminal nuts and washers, and 1-inch terminal connectors. The terminal blocks are so located that one row (12 terminals) may be raised, by the user, when 2-3/8" centers are desired. The user can remove unwanted terminals by saw-cutting from the terminal blocks, and mount resistors, etc., as required to the plywood board.

Terminals are A.A.R. type (#14-24) molded in blocks of bakelite insulation, 12 terminals per block, in line on 1" centers.

FITTINGS

The junction box is clamped on the side of pipe post with U-bolts so that the wire entrance hole (or holes) in the back will coincide with compatible hole (or holes) in the pipe.

U-bolts and nuts, are not included and must be ordered separately, for the size of pipe on which box is to be mounted.

UNION SWITCH & SIGNAL
DIVISION OF WESTINGHOUSE AIR BRAKE COMPANY

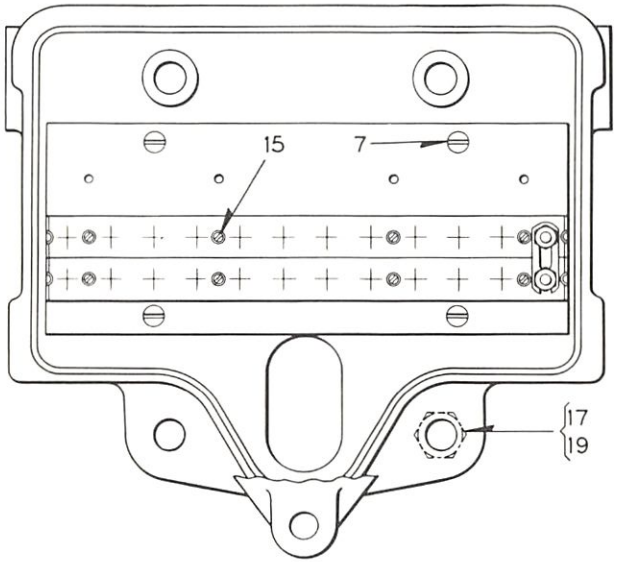

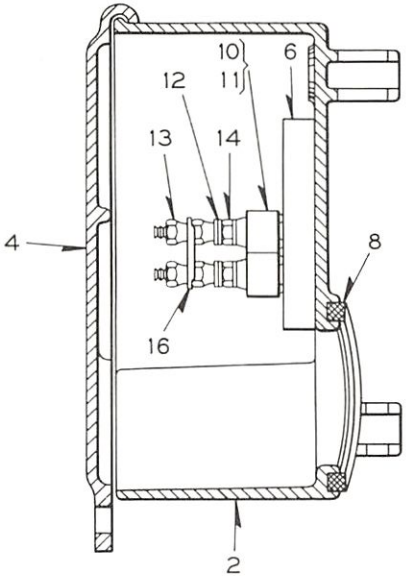

A

JUNCTION BOX FOR MOUNTING ON 3" TO 8" PIPE POST

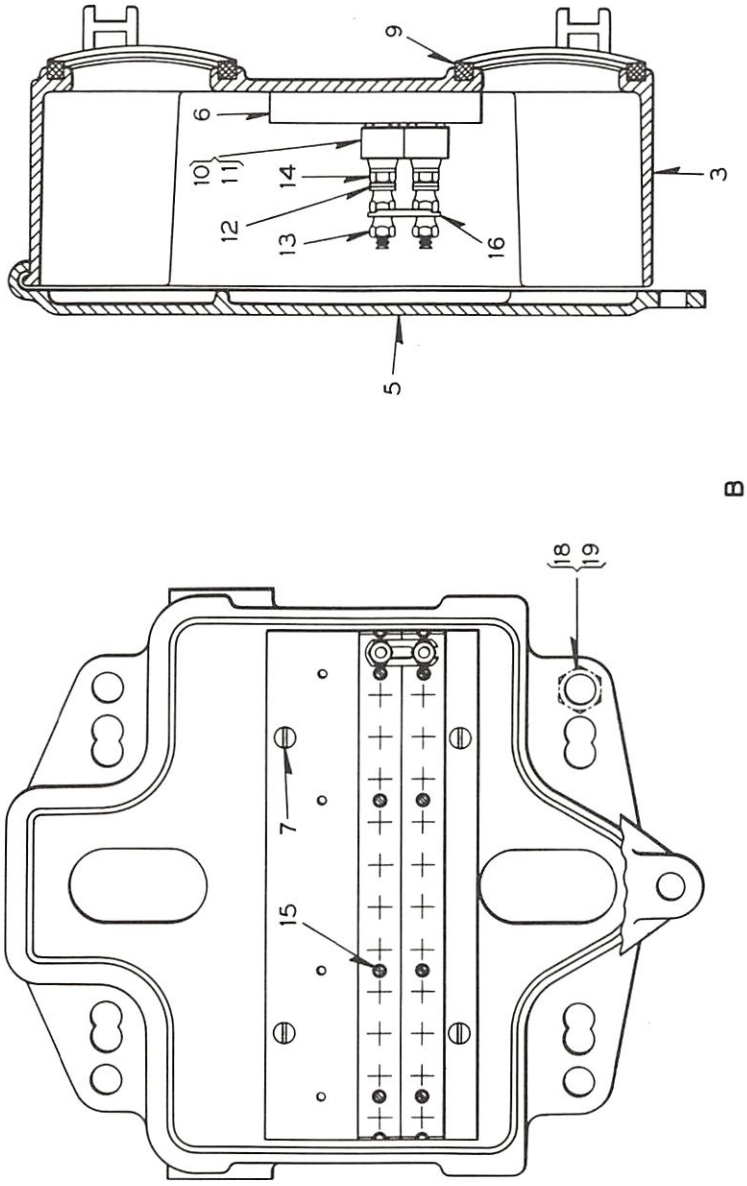

JUNCTION BOX FOR MOUNTING ON 3" TO 8" PIPE POST

JUNCTION BOXES FOR MOUNTING ON SIDE OF 3" TO 8" PIPE POST

24 TERMINALS

Junction Boxes do not include U-Bolts, Refs. 17 thru 25 inclusive.
If desired, U-Bolts must be ordered separately.

Indented item descriptions indicate that the references in the "Used On" column refer to this Plate L3-151.

Order by Plate, Reference, Piece and Abbreviated Description

REF.	PIECE	DESCRIPTION	DRAWING
A	UN372979	Junction Box Complete with two Terminal Blocks (24 terminals). For applying to 3" to 6" pipe post	D66357-1
B	UN372993	Junction Box Complete with two Terminal Blocks (24 terminals). For applying to 4" to 8" pipe post	D66357-2

REF.	PIECE	DESCRIPTION	DRAWING	USED ON
2	UM172542	. Junction Box	D66358-1	A
3	UM109670	. Junction Box	D66358-3	B
4	UM172543	. Cover	D66358-2	A
5	UM109671	. Cover	D66358-4	B
6	UM348977	. Mounting Board	B35041-6	A, B
7	UJ52029	. Screw, 1/4" x 1" fil. hd. steel (Tin Pl.)		A, B
8	UM52794	. Gasket.	8078-924	A
9	UM109747	. Gasket.	8078-1701	B
10	UN106937	. Terminal Block Complete	9968-1250	A, B
11	UJ77653	. . Terminal Block Only.	9968-49	10
12	UJ47818	. . Washer	7828-139	10
13	UM29101	. . Nut	8109-193	10
14	UM29103	. . Nut	8109-194	10
15	UJ52936	. Wood Screw, No. 12 x 1" rd. hd. steel (Tin Pl.)		A, B
16	UM56224	. Connector	8064-348	A, B
17	UM195507	U-Bolt, for 3" pipe	8782-204	A
17a	UM183410	U-Bolt, for 3-1/2" pipe	8782-194	A
17b	UM118554	U-Bolt, for 4" pipe	8782-99	A
17c	UM52795	U-Bolt, for 5" pipe	8782-99	A
17d	UN214445	Hinged U-Bolt, for 6" pipe	8782-218	A
18	UM216946	U-Bolt, for 4" or 5" pipe	8782-99	B
18a	UM109746	U-Bolt, for 6" pipe	8782-37	B

REF.	PIECE	DESCRIPTION	DRAWING	USED ON
18b	UM215117	U-Bolt, for 8" pipe	8782-220	B
19	UJ48020	Hex. Nut, 5/8" steel (Cad. Pl.)		A, B

STYLE USG LIGHTNING ARRESTERS

Filling the need for adequate and enduring lightning protection, the UNION Style USG Lightning Arresters are designed for general use in signal and communication circuits.

The low voltage arresters (black lettering) is designed to break down above 50V. (peak) and below 300V. (peak).

The higher voltage arrester (red lettering) is designed to break down above 500V. (peak) and below 1200V. (peak).

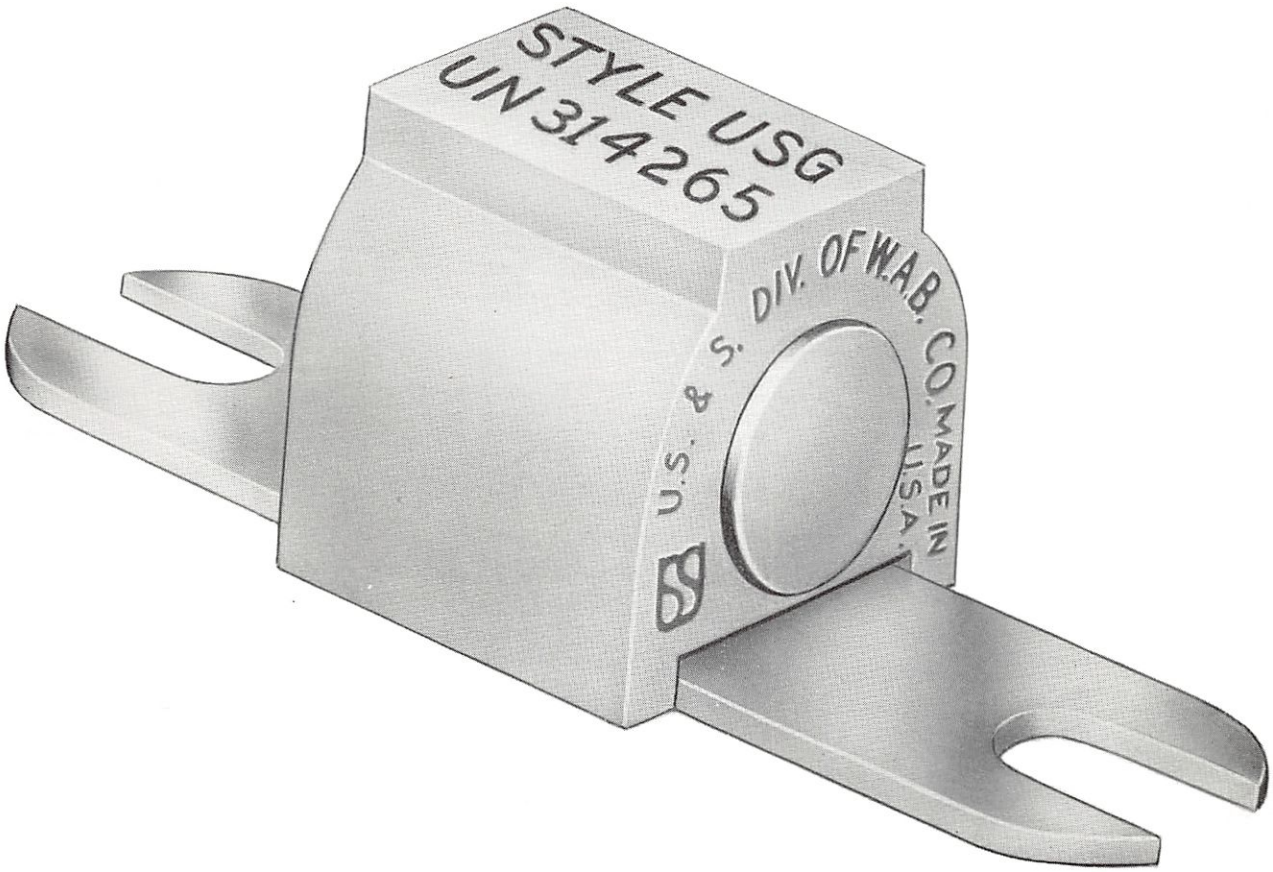

Height 15/16", Width 3-1/8", Depth 1"
STYLE USG LIGHTNING ARRESTER

REQUIREMENTS FOR LIGHTNING PROTECTION

Essentially, the purpose of lightning protection is to restrain the voltage impressed on any equipment below its breakdown voltage and to minimize the surge current through the equipment.

In order to limit the surge voltages, it is necessary to employ suitable arresters between any points of exposure. The simplest way is to use series arresters between each line or track lead and a common ground bus. This common ground bus should also be connected directly to the housings, signal poles, and all grounds at the location to limit the surge voltage between any connections on equipment or between equipment and housing.

Ground wires should be short and without sharp bends. Each of the series arresters should limit the surge voltage across itself to less than 1500 volts (peak) in order to prevent the voltage between any two points exceeding 3000 volts (peak), which is the voltage at which most signal equipment insulation is checked.

Where low impedance equipment, contacts in circuits or rectifiers and similar apparatus are exposed to lightning surges, it is desirable to use shunt arresters with relatively low flashover voltage. Field experience has shown that surge currents rarely damage equipment if the Style USG low voltage shunt arrester is used which has a flashover voltage below 300 volts (peak).

In order to minimize lightning damage to equipment, arresters must be mechanically rugged to withstand the tremendous forces set up by a discharge and must retain their rating after many surges. Gap resistance should be high, the gap must be well vented yet be protected from moisture and dust, and should be self-cleaning.

CONSTRUCTION

The Style USG Arrester consists of two cylindrical metal discs, separated by a special round insulator, a translucent plastic cover and two mounting lugs. The assembly is riveted together under pressure to prevent tampering, maintain the air gap and the accuracy and uniformity of the processing. The spacing of the lugs provides for mounting on a standard A. A. R. terminal block with 2-3/8" terminal spacing and 1" overall width.

These arresters are self-cleaning, since the magnetic field set up by the arc blows out the gases, metallic particles, dust and moisture. The plastic cover is somewhat larger than the metal discs and is open on the bottom and at one end to allow the gases to escape and to prevent a dangerous explosion of the arrester during heavy lightning surges. The cover prevents accumulation of dust and moisture in the arrester.

APPLICATION

Our recommended practice for lightning protection is shown on the following Standard System Designs, etc., which are available upon request.

S3L5A1 - Sh. 1 - C.T.C. Code Line, Multiple Line Application.

S3L5A2 - Sh. 1 - Instrument Case Location.

S3L5A3 - Sh. 1 - High Voltage Transformer Location.

S3L5A4 - Sh. 1 - Track Circuits.

S3L5A5 - Sh. 1 - Track Circuits.

S3L5A6 - Sh. 1 - Controlled Location.

S3L5A7 - Sh. 1 - Two-wire Traffic Circuits, Non-vital.

S3L5A8 - Sh. 1 - Signal Lamps.

UD 280 - Style USG Lightning Arrester.

UD 281 - Audio Frequency Overlay (AFO) Equipment.

We do not recommend the use of any other type of arrester or discharge resistor in multiple with UNION Style USG Arresters, since our field tests have shown that such combinations may prevent protection.

INSTALLATION

The Style USG Arrester may be mounted on a wall or on the top of a shelf, but should not be mounted upside down on the under side of a shelf. It may be mounted horizontally or vertically, but if mounted vertically, the open end of the cover should be downwards to prevent accumulation of dust and moisture inside the cover. Allow 1" minimum between bottom or open end of the arrester and a flat mounting surface to permit escape of gases.

To obtain maximum protection, wiring should be run first to the arrester, and then to the equipment, thus placing the arrester between the exposure and the equipment.

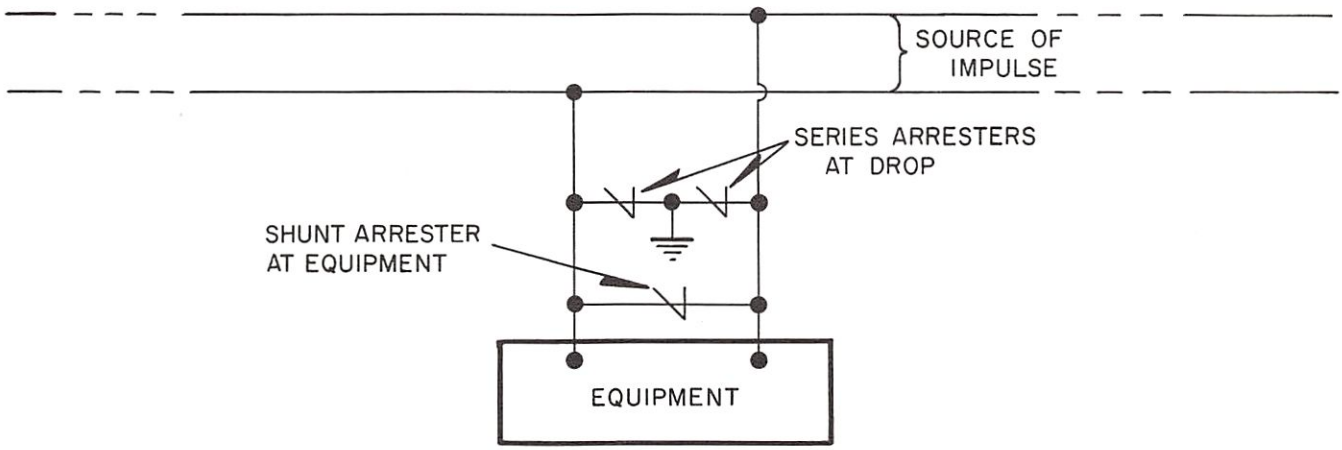

Figure 1 . . . Typical circuit utilizing USG Lightning Arresters for ultimate protection.

INSPECTION

After a surge through a UNION Style USG Arrester, the translucent plastic cover may be discolored around the gap. This discoloration does not in any way impair the functioning of the arrester. Tests have shown that this arrester will withstand hundreds of lightning surges without materially increasing the breakdown voltage. This arrester should not be disassembled, since it cannot be reassembled without affecting its operation adversely. Nothing can be gained by a visual inspection of the gap.

We do not consider it necessary to test UNION Style USG Arresters periodically in service; however, its resistance may be checked with a low voltage ohmmeter or analyzer, if so desired. (Do not use a megger or an AC Voltage).

The ground bus should be as short and free from bends as practical. A separate extension there-from should be connected to each housing, signal poles and to other grounds at a location.

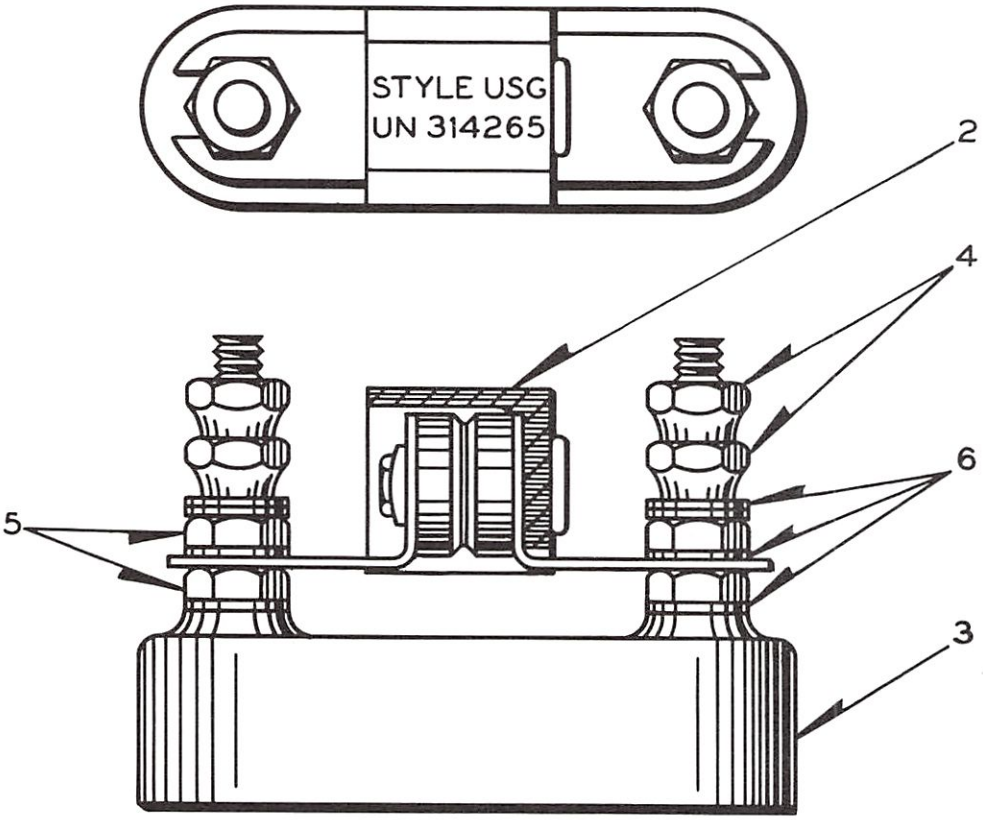

A

STYLE USG LIGHTNING ARRESTER

STYLE USG LIGHTNING ARRESTERS

Assemblies and Detail Parts

Indented item descriptions indicate that the references in the "Used On" column refer to this Plate P1-5.

Order by Plate, Reference, Piece and Abbreviated Description

REF.	PIECE	DESCRIPTION	DRAWING	USED ON
A	UN314266 Track	Style USG Lightning Arrester, with a terminal block, for use as a shunt or as a series arrester on track circuits or on low voltage line circuits up to 50 volts (peak). (Marked in Black Ink)	12743-11	
Aa	UN327989 Line	Style USG Lightning Arrester, with terminal block, for general use as a series track, series line or a shunt on line circuits up to 400 volts (peak). (Marked in Red Ink)	12743-11	
2	UN314265	. Style USG Lightning Arrester (Marked in Black Ink)	12743-10	A
2a	UN327988	. Style USG Lightning Arrester (Marked in Red Ink) .	12743-10	Aa
3	UJ77058	. Terminal Block Bakelite, 2-3/8", centers	9968-1030	A, Aa
4	UM29101	. Nut, Binding No. 14-24 Brass (Ni. Pl.)	8109-193	A, Aa
5	UM127260	. Nut, Hex No. 14-24 Brass (Ni. Pl.)	8109-194	A, Aa
6	UJ47818	. Washer.	7828-139	A, Aa

CAST IRON FOUNDATION PIERS FOR INSTRUMENT CASES AND HOUSES

Cast iron pier foundations meet the needs for mounting of various type signaling devices. The cast iron pier foundation is particularly adaptable for the mounting of the Style S and Style RS sheet steel instrument cases or the HM sheet steel instrument houses. The use of the cast iron pier foundation eliminates the need for concrete foundations. The cast iron pier foundation is not buried completely into the ground which minimizes condensation in the interior by providing better ventilation and allows for easy accessibility for running the wires into the instrument case or the instrument house.

FEATURES

Economical

Lower installation costs.

Lower maintenance cost.

MEMORANDA

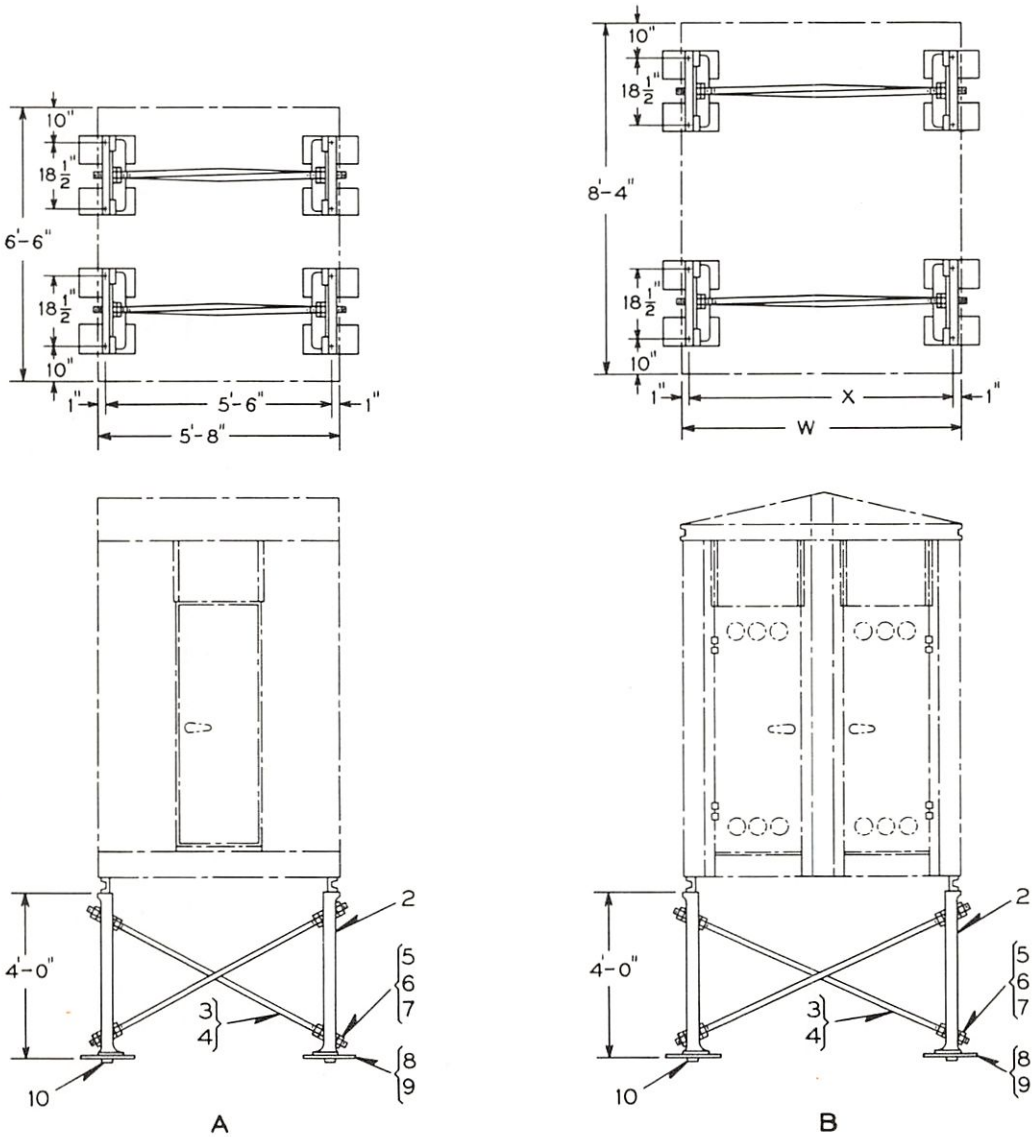

CAST IRON FOUNDATION PIERS FOR INSTRUMENT HOUSES

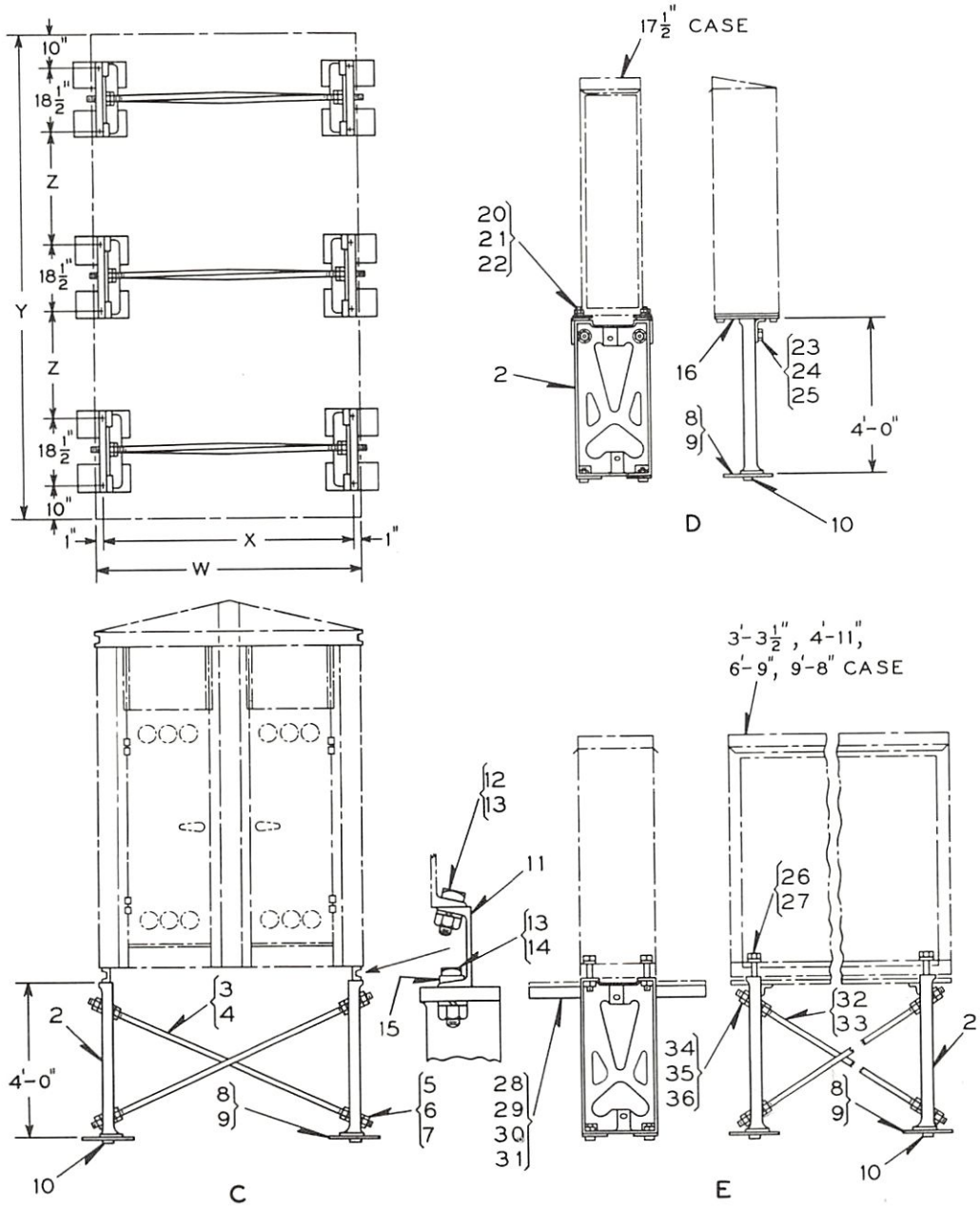

CAST IRON FOUNDATION PIERS FOR INSTRUMENT CASES AND HOUSES

CAST IRON FOUNDATION PIERS FOR INSTRUMENT CASES AND HOUSES

Piers for Instrument Cases (Refs. E, Ea, and Eb) do not include Tie Rods. Rods must be ordered separately to suit size of case.

Indented item descriptions indicate that the references in the "Used On" column refer to this Plate P7-1.

Order by Plate, Reference, Piece and Abbreviated Description

Cast Iron Foundation Piers Complete with Tie Rods, Channels, Bearing Plates, Bolts, Nuts, and Washers for Style HM Sheet Steel Instrument House

REF.	PIECE	SIZE OF HOUSE	DIMENSIONS				DRAWING
			W	X	Y	Z	
A	UO372702	6'-6" x 5'-8"	-	-	-	-	B35023-2
B	UO346134	6'-6" x 8'-4"	6'-6"	6'-4"	-	-	B35023-1
Ba	UO346135	8'-6" x 8'-4"	8'-6"	8'-4"	-	-	B35023-1
C	UO346158	6'-6" x 12'-0"	6'-6"	6'-4"	12'-0"	34-1/4"	B35023-3
Ca	UO346159	8'-6" x 12'-0"	8'-6"	8'-4"	12'-0"	34-1/4"	B35023-3
		8'-6" x 15'-8"	8'-6"	8'-4"	15'-8"	56-1/4"	

REF.	PIECE	DESCRIPTION	DRAWING
D	UO284673	Cast Iron Foundation Pier Complete with Adapter Bracket, Bearing Plates, Bolts, Nuts, and Washers. For 17-1/2" Style S Sheet Steel Instrument Cases	12797-31
E	UO268334 $116	Cast Iron Foundation Piers Complete with Platform Supports (front and rear), Bearing Plates, Bolts, Nuts, and Washers. For Style RS Sheet Steel Instrument Cases. Does not include Tie Rods which must be ordered separately to suit size of case	12797-22A
Ea	UO268335 $116	Cast Iron Foundation Piers Complete with Platform Supports (front only), Bearing Plates, Bolts, Nuts, and Washers. For Style RS Sheet Steel Instrument Cases. Does not include Tie Rods which must be ordered separately to suit size of case . .	12797-22A
Eb	UO265125 $89	Cast Iron Foundation Piers Complete with Bolts and Nuts for fastening to Style RS Sheet Steel Instrument Cases. Without Bearing Plates and Platform Supports. Does not include Tie Rods which must be ordered separately to suit size of case . .	12797-22A

REF.	PIECE	DESCRIPTION	DRAWING	USED ON
2	UM108924	. Foundation Pier	C16752-1	A thru Eb
3	UN372701	. Tie Rod Complete	8091-104	A
3a	UN346100	. Tie Rod Complete	8091-104	B, C
3b	UN346102	. Tie Rod Complete	8091-104	Ba, Ca

REF.	PIECE	DESCRIPTION	DRAWING	USED ON
4	UM372700	. . Tie Rod Only	8091-104	3
4a	UM346099	. . Tie Rod Only	8091-104	3a
4b	UM346101	. . Tie Rod Only	8091-104	3b
5	UJ48026	. . Hex. Nut, 3/4" (Cad. Pl.)		3, 3a, 3b
6	UM108925	. . Washer		3, 3a, 3b
7	UJ47506	. . Plate Washer, 3/4" (Cad. Pl.)		3, 3a, 3b
8	UN268315	. Bearing Plate Complete, with Bolt and Nut	9999-2419	A thru Ea
9	UM268031	. . Bearing Plate Only	9999-2419	8
10	UJ466032	. . Bolt, 3/4" x 2-1/2" sq. hd. with hex. nut (galv.)		8
11	UM346095	. Foundation Channel	D66075-20	A thru Ca
12	UJ466021	. Bolt, 3/4" x 2" sq. hd. with hex. nut (galv.)		A thru Ca
13	UJ47794	. Lock Washer, 3/4" plain steel		A thru Ca
14	UJ466032	. Bolt, 3/4" x 2-1/2" sq. hd. with hex. nut (galv.)		A thru Ca
15	UM107911	. Washer	8065-180	A thru Ca
16	UR374245	. Adapter Bracket	C9347-805	D
17	UJ46034	. Bolt, 3/4" x 3-1/4" rd. hd. countersunk plow. For attaching Adapter Bracket to Pier (Not Shown)		D
18	UM56352	. Spacer, used with Ref. 17 (Not Shown)	B10333-2	D
19	UJ47506	. Plate Washer, 3/4" steel. Used with Ref. 17 (Not Shown)		D
20	UJ47772	. Lock Washer, 3/4" plain steel. Used with Ref. 17 and 22		D
21	UJ48026	. Hex. Nut, 3/4" steel. Used with Refs. 17 and 22		D
22	UJ46725	. Bolt, 3/4" x 2" sq. hd. steel		D
23	UJ50115	. Cap Screw, 5/8" x 2" hex. hd. steel		D
24	UJ47771	. Lock Washer, 5/8" plain steel		D
25	UJ48020	. Hex. Nut, 5/8" steel		D
26	UJ463005	. Bolt, 3/4" x 7" hex. hd. with hex. nut (galv.)		E, Ea, Eb
27	UJ47795	. Plate Washer, 3/4" steel		E, Ea, Eb
28	UM231669	. Platform Support (front and rear)	C16757-22	E
28a	UM267145	. Platform Support, L.H. (front only)	C16757-22	Ea
28b	UM267146	. Platform Support, R.H. (front only)	C16757-22	Ea
29	UJ46884	. Bolt, 5/8" x 2" sq. hd. (galv.)		E, Ea
30	UJ48107	. Hex. Nut, 5/8" (galv.)		E, Ea
31	UJ47797	. Lock Washer, 5/8" plain steel (galv.)		E, Ea
32	UN268103	Tie Rod Complete for 3'-3-1/2" case	8261-178	E, Ea, Eb

REF.	PIECE	DESCRIPTION	DRAWING	USED ON
32a	UN268097	Tie Rod Complete for 4'-11" case	8261-181	E, Ea, Eb
32b	UN268095	Tie Rod Complete for 6'-9" case	8261-180	E, Ea, Eb
32c	UN268093	Tie Rod Complete for 9'-8" case	8261-180	E, Ea, Eb
33	UM268102	. Tie Rod Only	8261-178	32
33a	UM268096	. Tie Rod Only	8261-181	32a
33b	UM268094	. Tie Rod Only	8261-180	32b
33c	UM268092	. Tie Rod Only	8261-180	32c
34	UM108925	. Washer	8065-227	32 thru 32c
35	UJ48126	. Hex. Nut, 3/4" (galv.)		32 thru 32c
36	UJ47795	. Plate Washer, 3/4" steel (galv.)		32 thru 32c

Section

R

Electro-Pneumatic

Car Retarders

AXED
MAY 16 2006

UNION SWITCH & SIGNAL
DIVISION OF WESTINGHOUSE AIR BRAKE CO.
SWISSVALE, PENNSYLVANIA

PLATE R-4A

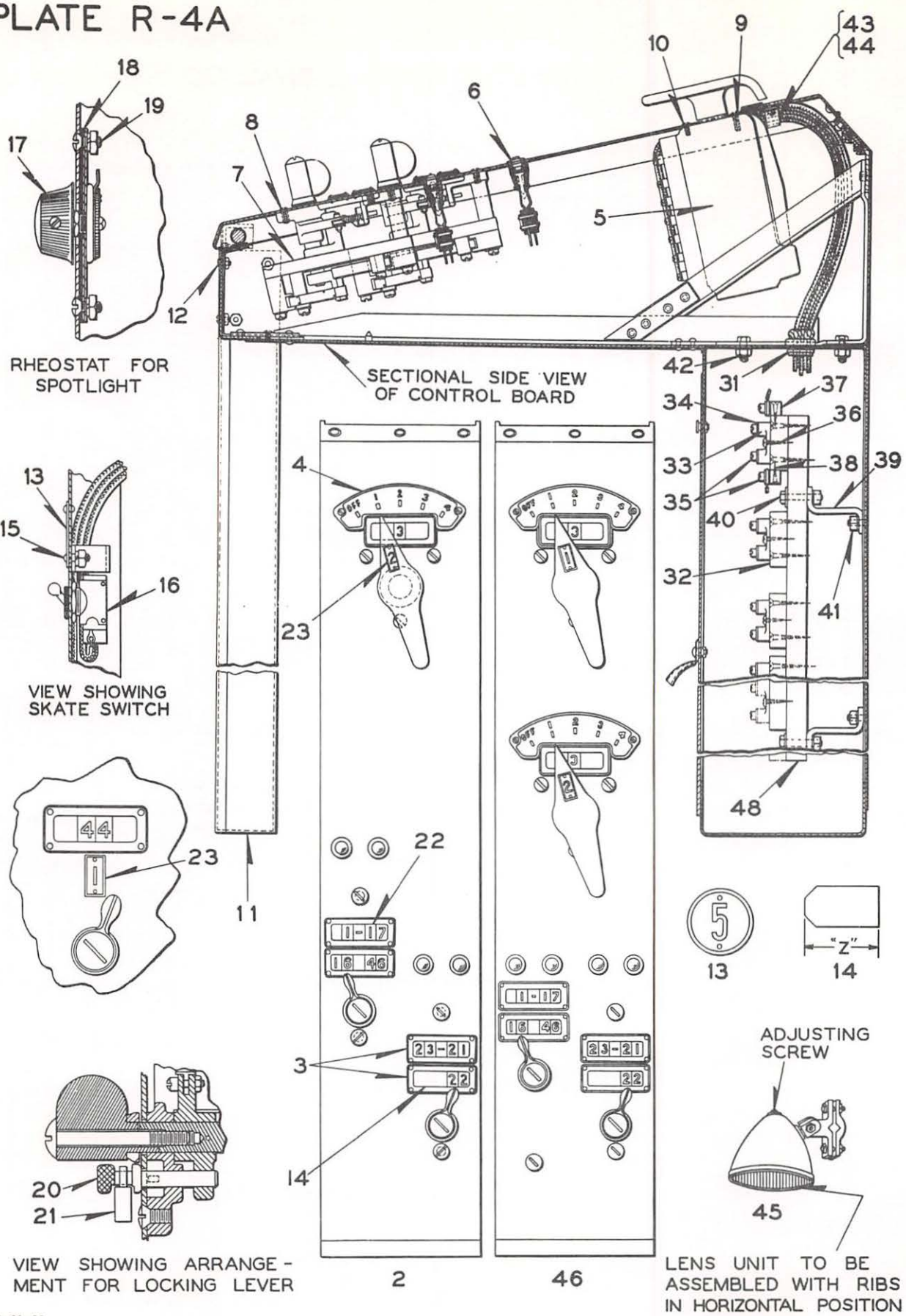

2-25-38

CONTROL PANEL WITH SWITCH & RETARDER UNITS

UNION SWITCH & SIGNAL CO.

CONTROL PANEL WITH RETARDER, SKATE AND SWITCH UNITS

For details of Control Units, Skate Switches, Indication Lights, etc., see Plates R-6 and R-11.

Order by Plate, Piece, Reference and Abbreviated Description Given in Heavy Face Type Only

PIECE	REF.	DESCRIPTION	DWG. REF.
	2	CONTROL PANEL for Model 28 Car Retarder with Switch and Retarder Units, Indication Lights and Number Plates (Orders should refer to Plate R-6 for Retarder and Hump Signal Control Units; Plate R-11 for Indication Lights and Switch Control Units and numbering of Number Plates).....	D-2343-17
156198	3	NUMBER PLATE with four Rivets Ref.3b (Orders should specify Numbers required).....	8286-110
156129	3a	FILLER PAD, used with Ref.3.....	8078-1462
37417	3b	RIVET, NO.14 x 5/16" for attaching Number Plate to Panel.....	10301-21
153369	4	NUMBER PLATE, with Machine Screws Ref.4b (Numbered as shown)..	8286-106
156134	4a	NUMBER PLATE, with Machine Screws Ref.4b (Lettered Stop and Clear) for Hump Signal Controller.....	8286-106
	4b	MACHINE SCREW, NO.4-48 x 3/16" Rd.Hd.Br. (N.P.)	
	5	CONTROL UNIT for Retarder and Hump Signal (For ordering assemblies and details refer to Plate R-6).....	C-9074-4
	6	INDICATION LIGHT (For details refer to Plate R-11).....	12522-14
	7	SWITCH CONTROL UNIT (For ordering assemblies and details refer to Plate R-11).....	C-9089-2
	7a	SWITCH CONTROL LEVER UNIT (Single Contact) (For ordering assemblies and details refer to Plate R-11).....	C-9089-1
	8	MACHINE SCREW, NO.14-24 x 1/2" Oval Csk.Hd.S. for attaching Ref.7 to Panel	
	9	MACHINE SCREW, NO.10-30 x 5/8" Oval Csk.Hd.S. for attaching Ref.5 to Panel	
	10	MACHINE SCREW, NO.10-30 x 3/8" Oval Csk.Hd.S. for attaching Ref.5 to Panel	
163818	11	L.H. LEG.....	C-9094-94
163819	11a	R.H. LEG.....	C-9094-94
	12	MACHINE SCREW, NO.10-30 x 3/8" Oval Csk.Hd.S. with Hex.Nut Ref.12a and No.10 Plain S.Lock Washer (1/8" x 3/64") for attaching Refs.11 and 11a.	
73488	12a	HEX.NUT for Ref.12.....	8265-111
	13	ETCHED NUMBER PLATE (Orders should specify number required) For Skate Machine.....	8286-94
	13a	NUMBER PLATE (Etched "Whistle") for Skate Machine.....	8286-94
	13b	NUMBER PLATE (Etched "Hump") for Skate Machine.....	8286-94

UNION SWITCH & SIGNAL CO.

PIECE	REF.	DESCRIPTION	DWG. REF.
	13c	NUMBER PLATE (Etched "Stop") for Skate Machine.....	8286-94
	13d	NUMBER PLATE (Etched "Trim") for Skate Machine.....	8286-94
	13e	NUMBER PLATE (Etched "Backup") for Skate Machine.....	8286-94
156082	14	FILLER BLOCK "Z" dim. - 5/16".....	11893-460
156143	14a	FILLER BLOCK "Z" dim. - 29/64".....	11893-460
159320	14b	FILLER BLOCK "Z" dim. - 3/4".....	11893-460
159445	14c	FILLER BLOCK "Z" dim. - 39/64".....	11893-460
163816	14d	FILLER BLOCK "Z" dim. - 1-3/64".....	11893-460
163817	14e	FILLER BLOCK "Z" dim. - 1-13/64".....	11893-460
156081	14f	FILLER BLOCK "Z" dim. - 5/32".....	11893-460
54920	15	RIVET for Refs.13, 13a, 13b, 13c, 13d and 13e.....	10301-1
	16	TUMBLER SWITCH with Hex.Nut and Knurled Nut (C.N.-72739)	
	17	RHEOSTAT (6-Ohm) with Arrow Knob	
	17a	RHEOSTAT (2-Ohm) with Arrow Knob	
167328	18	INSULATION for Ref.17.....	8750-2418
194599	18a	INSULATION for Ref.17a.....	8750-2705
	19	MACHINE SCREW NO.10-30 x 1/2" Oval Csk.Hd.S. with No.10 Plain S.Lock Washer (1/8" x 3/64") and Nut Ref.19a (For attaching Ref.17 to Panel)	
73488	19a	NUT ONLY, for Ref.19.....	8265-111
171971	20	KEY.....	11011-10
	21	PADLOCK (#800) with No.26 Key	
	22	ETCHED NUMBER PLATE (Orders should specify number required)...	8286-109
	22a	BLANK PLATE (Used to fill blank spaces where numbers are not required).....	8286-109
	23	ETCHED NUMBER PLATE (Orders should specify number required) with two Rivets Ref.3b.....	8286-113
	24	MACHINE SCREW NO.8-36 x 7/16" Oval Csk.Hd.S.(Not shown) with Nut Ref.24a, and No.10 Plain S.Lock Washer (1/8" x 3/64") Cad.Pl. used with Ref.26	
94344	24a	NUT, for Ref.24.....	8265-70
41614	25	WASHER (Not shown).....	7826-98
156274	25a	WASHER.....	7826-273
70230	26	PUSH BUTTON (Not shown) (When ordering refer to Plate R-11)...	B-9918-16
163814	27	STAPLE (Not shown) with Nut Ref.27a and 5/16" Plain S.Lock Washer (1/16" x 1/16").....	8191-142
19145	27a	NUT for Ref.27.....	8265-81
	28	RIVET 3/16" x 1" Rd.Hd.I. (Not shown) for Ref.27	
163810	29	PLATE (Not shown) for Ref.30.....	9999-748
163813	30	HASP (Not shown) with Nut Ref.27a and 5/16" Plain S.Lock Washer (1/16" x 1/16").....	8299-117

UNION SWITCH & SIGNAL CO.

PIECE	REF.	DESCRIPTION	DWG. REF.
163809	31	INS. BUSHING	8100-202
176588	32	TERMINAL BOARD (For 16-Way Machine) with 34 Terminal Connectors (Without Bus Bar, Screws and Washers)	C-9094-109
163787	32a	TERMINAL BOARD (For 14-Way Machine) with 30 Terminal Connectors (Without Bus Bar, Screws and Washers)	C-9094-97
164787	32b	TERMINAL BOARD (For 10-Way Machine) with 21 Terminal Connectors (Without Bus Bar, Screws and Washers)	C-9094-102
101359	32c	TERMINAL BOARD (For 11-Way Machine) with 23 Terminal Connectors (Without Bus Bar, Screws and Washers)	C-9094-113
164788	32d	TERMINAL BOARD Ref.32b with two Bus Bars, Screws and Washers	C-9094-102
101360	32e	TERMINAL BOARD Ref.32c with two Bus Bars, Screws and Washers	C-9094-113
164806	32f	TERMINAL BOARD Ref.32a with one Bus Bar, Screws and Washers	C-9094-97
163798	32g	TERMINAL BOARD Ref.32a with two Bus Bars, Screws and Washers	C-9094-97
176598	32h	TERMINAL BOARD Ref.32 with two Bus Bars, Screws and Washers	C-9094-109
2997	33	TERMINAL CONNECTOR (Without Screws and Washers)	8064-36
821	34	WASHER	7828-4
	35	MACHINE SCREW NO.12-28 x 1/2" Fil.Hd.B. (N.P.)	
	36	WOOD SCREW NO.8 x 5/8" Rd.Hd.S. (Cad.Pl.) for fastening Ref.33 to Terminal Board	
176589	37	BUS BAR (Without Screws and Washers) for Ref.32h	C-9094-109
155865	37a	BUS BAR (Without Screws and Washers) for Refs.32f and 32g	C-9094-71
164789	37b	BUS BAR (Without Screws and Washers) for Ref.32d	C-9094-102
101361	37c	BUS BAR (Without Screws and Washers) for Ref.32e	C-9094-113
	38	WOOD SCREW NO.10 x 1" Flat Hd.S. (Cad.Pl.) for fastening Refs.37, 37a and 37b to Terminal Board.	
132819	39	BRACKET	C-9094-19
	40	BOLT 1/4"-20 x 1-1/2" Hex.Hd. with 1/4" Hex.Nut, 1/4" Plain S. Lock Washer (1/16" x 1/16") and 1/4" Plate Washer for fastening Ref.39 to Terminal Board	
	41	MACHINE SCREW 1/4"-20 x 3/4" Flat Hd.S. with 1/4" Hex.Nut and 1/4" Plain S.Lock Washer (1/16" x 1/16") for attaching Ref.39 to Case	
	42	TAP BOLT 1/4"-20 x 3/4" Hex.Hd. with 1/4" Hex.Nut, and 1/4" Plain S.Lock Washer (1/16" x 1/16") Cad.Pl.	
163808	43	WIRE CLIP	10914-232
	44	MACHINE SCREW NO.10-30 x 3/8" Flat Hd.S. with No.10 Plain Lock Washer and Nut Ref.44a	
73494	44a	NUT for Ref.44	8265-126
	45	SPOT LIGHT, for Illumination of Control Machine	
	46	CONTROL PANEL for Models 31 and 31a Car Retarders with Switch and Retarder Units, Indication Lights and Number Plates (Orders should refer to Plate R-6 for Retarder and Hump Signal Control Units; Plate R-11 for Indication Lights and Switch Control Units and numbering of Number Plates)	D-2343-17
141447	47	STYLE NL-15 TRANSFORMER 110-Volts, 60/100 Cycles (Not shown) (When ordering refer to Ref.35, Plate F-6003)	C-8605-14

UNION SWITCH & SIGNAL CO.

PIECE	REF.	DESCRIPTION	DWG. REF.
144955	48	END BRACE.....	C-9094-51
144956	48a	CENTER BRACE.....	C-9094-51

2-25-38

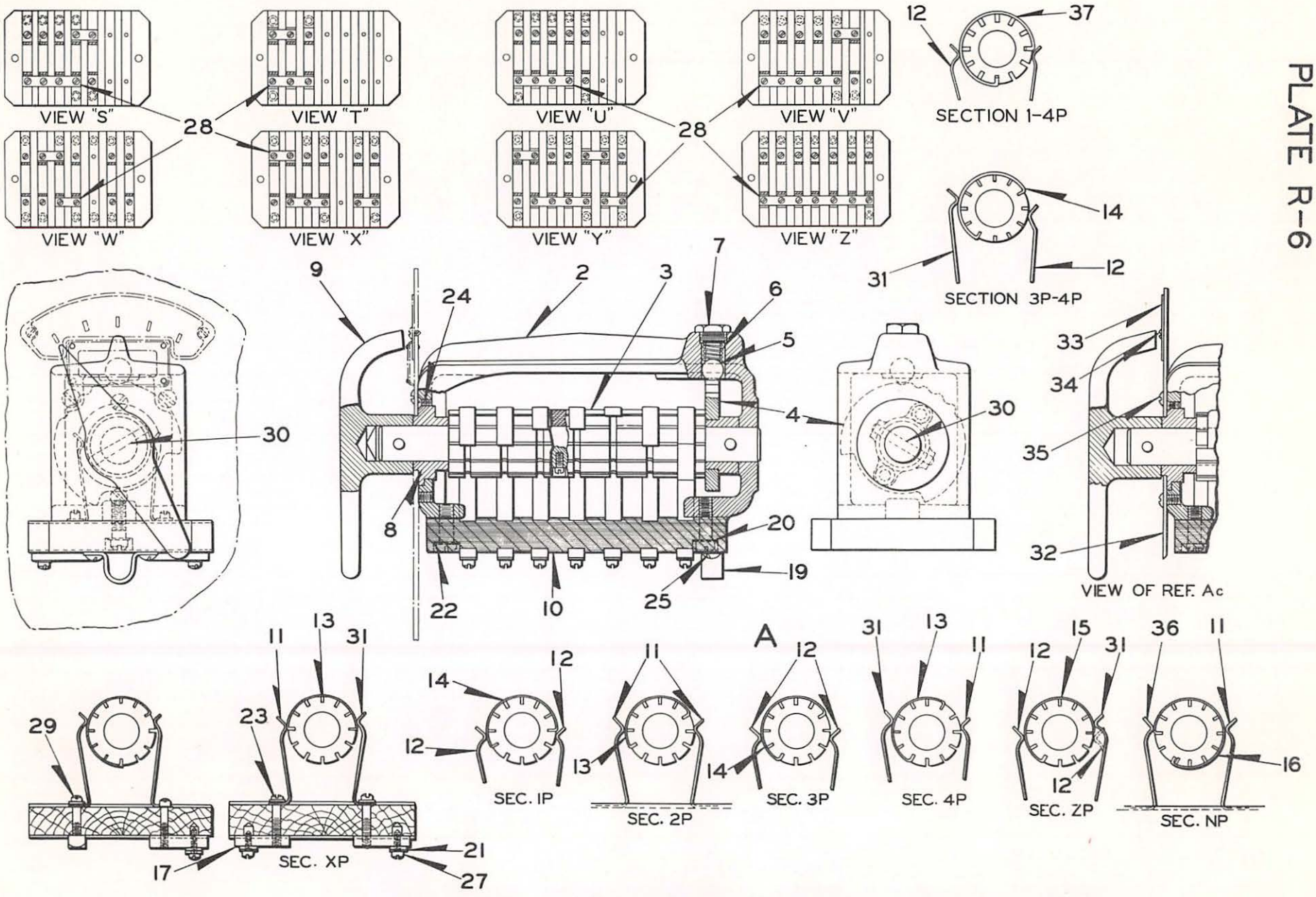

9-31 2-25-38

CONTROL UNIT FOR RETARDER & HUMP SIGNAL

PLATE R-6

UNION SWITCH & SIGNAL CO.

MODELS "28", "31" AND "31A" CAR RETARDER

DETAIL PARTS

CONTROL UNIT FOR MODELS "28","31" AND "31A"
CAR RETARDER AND HUMP SIGNAL

Order by Plate, Piece, Reference and Abbreviated Description Given in Heavy Face Type Only

CONTROLLER UNIT COMPLETE, FOR MODELS "28", "31" AND "31A" CAR RETARDER

PIECE	REF.	CONTACTS IN SECTION PER DIAGRAMS							RATCHET	TERMINAL BOARD	DWG.REF.
		1	2	3	4	5	6	7			
155004	A	XP	1P	2P	3P	4P	ZP	NP	Ref.4	(5-Pos.) Per View "Y"	C-9074-4
155184	Aa	4P	4P	4P	4P	ZP	ZP	ZP	Ref.4a	(2-Pos.) Per View "Z"	C-9074-4
158788	Ab	XP	1P	2P	3P 4P	--	ZP	NP	Ref.4	(5-Pos.) Per View "X"	C-9074-4
161757	Ac	XP	1P	2P	3P 4P	--	ZP	NP	Ref.4	(5-Pos.) Per View "Z"	C-9074-4
171606	Ad	XP	1P	2P	3P 4P	--	*ZP	NP	Ref.4	(5-Pos.) Per View "W"	C-9074-4
185141	Ae	XP	1P	2P	3P	4P	--	--	Ref.4	(5-Pos.) Per View "S"	C-9074-4
207411	Af	4P	XP	4P	--	--	--	--	Ref.4	(3-Pos.) Per View "T"	C-9074-4
207498	Ag	4P	4P	ZP	ZP	4P	--	--	Ref.4a	(2-Pos.) Per View "U"	C-9074-4
	Ah	XP	1P	2P	3P	4P	1-4P	--	Ref.4	(5-Pos.) Per View "V"	C-9074-4

* Note:- With Spring as shown in dotted lines.

PIECE	REF.	DESCRIPTION	DWG.REF.
132119	2	BRACKET	C-9088-1
155003	3	ROLLER	8435-182
154998	4	RATCHET, for Refs.A, Ab, Ac, Ad, Ae, Af and Ah.(5-Position)	9121-129
155149	4a	RATCHET, for Refs.Aa and Ag (2-Position)	9121-129
	5	CARBON STEEL BALL 7/16" O.D.	
134298	6	SPRING	7770-288
133034	7	PLUG	9511-83
132151	8	BUSHING	8350-676
154999	9	HANDLE	8311-87
132141	10	TERMINAL BOARD	9968-709
31500	11	CONTACT SPRING (Stamped #12)	10913-4
40176	12	CONTACT SPRING (Stamped #6)	10913-4
37096	13	CONTACT BAND (180° for 1-1/4" Roller)	10913-37

UNION SWITCH & SIGNAL CO.

PIECE	REF.	DESCRIPTION	DWG. REF.
37098	14	CONTACT BAND (210° for 1-1/4" Roller)	10913-37
37101	15	CONTACT BAND (240° for 1-1/4" Roller)	10913-37
152189	16	CONTACT BAND (308½° for 1-1/4" Roller)	10913-37
132810	17	TERMINAL CONNECTOR	8064-583
132682	18	BALL RETAINER (Used previous to 7-23-31) (Not shown)	11893-265
132683	19	CLAMP	11893-264
84	20	WASHER for Ref.22	7828-6
20686	21	WASHER for Ref.23	7828-108
	22	MACHINE SCREW NO.14-24 x 5/8" Fil.Hd.Bz. (N.P.) for fastening Ref.10 to Ref.2	
	23	MACHINE SCREW NO.6-40 x 3/4" Fil.Hd.Br. (N.P.)	
	24	MACHINE SCREW NO.6-40 x 1/4" Flat Hd.S.	
	25	WOOD SCREW NO.8 x 1/2" Rd.Hd.S. (Tin Pl.) for fastening Ref.19 to Ref.2	
	26	MACHINE SCREW NO.8-36 x 1/4" Fil.Hd.Br. (N.P.)(Used previous to 7-23-31) (Not shown)(Used for fastening Ref.18 to Bracket)	
	27	MACHINE SCREW NO.6-40 x 3/8" Fil.Hd.Br. (N.P.)	
41052	28	CONNECTOR 6-1/2" LONG (Cut to Suit)	8762-69
49871	29	SCREW with Nut Ref.29a and Washer Ref.29b	8098-881
61147	29a	NUT for Ref.29	8109-346
49031	29b	WASHER for Ref.29	7828-214
	30	TAPER PIN NO.2 x 1-1/4"	
32178	31	CONTACT SPRING (Stamped #16)	10913-4
161758	32	FRONT PLATE for Ref.Ac	11893-498
153369	33	DIAL PLATE for Ref.Ac	8286-106
	34	MACHINE SCREW, NO.4-48 x 3/16 Rd.Hd.Br. (N.P.)	
	35	MACHINE SCREW, NO.10-30 x 1/2" Oval Csk.Hd.S.	
176783	36	CONTACT SPRING (Stamped #13)	10913-4
40097	37	CONTACT BAND (270° for 1-1/4" Roller)	10913-37

PLATE R-11

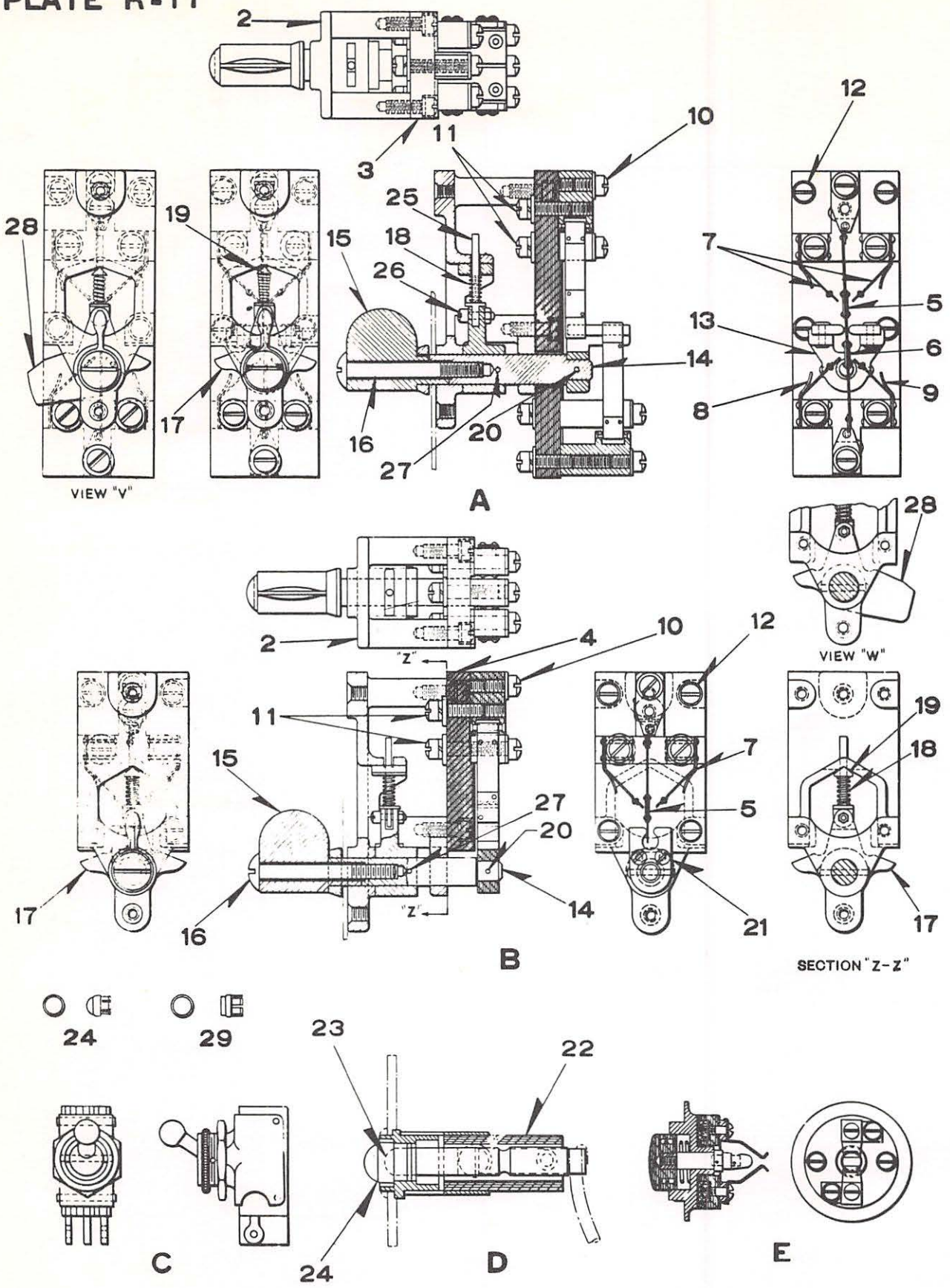

SWITCH & SKATE CONTROL UNITS & INDICATOR LIGHTS

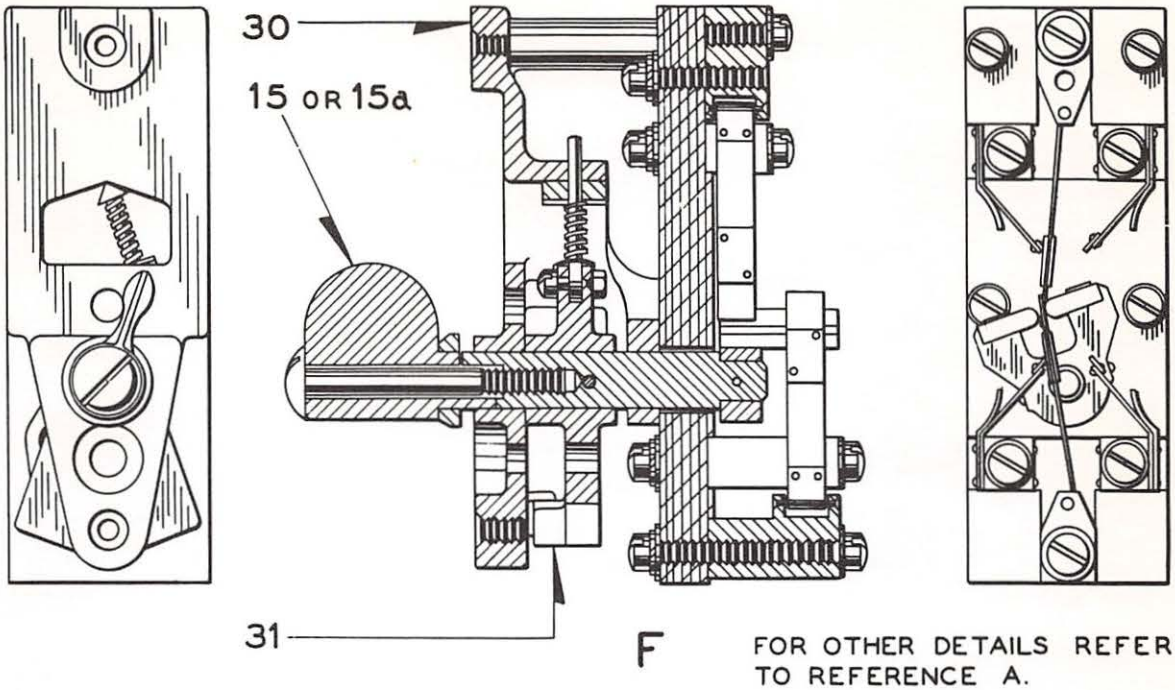

FOR OTHER DETAILS REFER TO REFERENCE A.

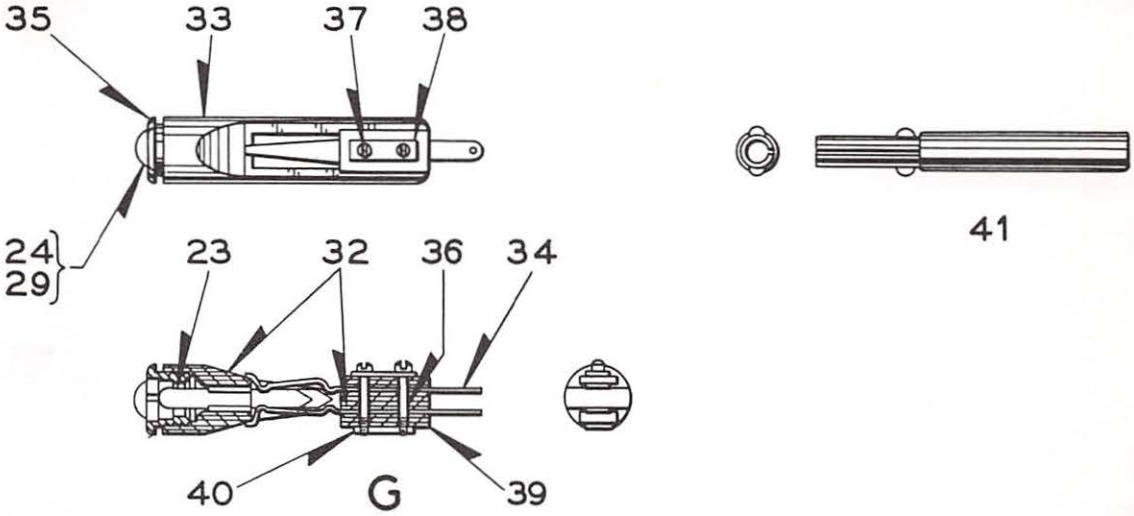

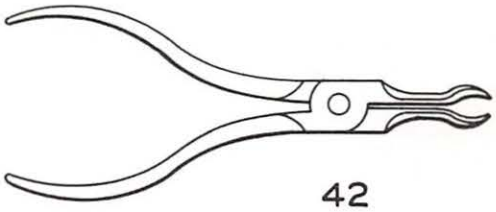

SWITCH & SKATE CONT. UNITS & IND. LIGHTS

UNION SWITCH & SIGNAL CO.

MODELS "28", "31" AND "31A" CAR RETARDER

DETAIL PARTS

SWITCH AND SKATE CONTROL UNITS AND INDICATION LIGHTS

(For other Control Units and Indication Lights refer to Plate R-11A)

Order by Plate, Piece, Reference and Abbreviated Description Given in Heavy Face Type Only

PIECE	REF.	DESCRIPTION	DWG. REF.
141951	A	SWITCH CONTROL LEVER UNIT (Double Contact) complete for Car Retarder Control Board	C-9089-2
172219	Aa	TRIMMER SIGNAL CONTROL UNIT for Trainmans Hump Signal Controller (Per View "V")	C-9089-2
132160	B	SWITCH CONTROL LEVER UNIT (Single Contact) complete for Car Retarder Control Board	C-9089-1
167760	Ba	TRIMMER SIGNAL CONTROL UNIT for Trainmans Hump Signal Controller (Per View "W")	C-9089-1
	C	SKATE SWITCH COMPLETE for Car Retarder Control Board	
153211	D	SPOT LIGHT UNIT with Lamp and Red Lamp Cap	12522-12
153254	Da	SPOT LIGHT UNIT with Lamp and Green Lamp Cap	12522-12
153255	Db	SPOT LIGHT UNIT with Lamp and White Lamp Cap	12522-12
155417	Dc	SPOT LIGHT UNIT with Lamp and Amber Lamp Cap	12522-12
70230	E	PUSH BUTTON CIRCUIT CONTROLLER for Control of Horn or Whistle.	B-9918-16
102788	F	SWITCH CONTROL LEVER UNIT (Double Contact) for Car Retarder Control Board (Using Thumb Piece Ref.15 for Standard mounting)	C-9089-4
102789	Fa	SWITCH CONTROL LEVER UNIT (Double Contact) for Car Retarder Control Board (Using Thumb Piece Ref.15a for inverted mounting)	C-9089-4
	G	SPOT LIGHT UNIT with Lamp and Lamp Cap (Orders should specify color of Lamp Cap desired by referring to Refs.24 to 24c or Ref.29)	12522-14
132161	2	BRACKET for Refs.A, Aa, B and Ba	C-9090-1
141950	3	TERMINAL BOARD for Refs.A, Aa, F and Fa	9968-786
132167	4	TERMINAL BOARD for Refs.B and Ba	9968-710
131790	5	CONTACT SPRING COMPLETE for Refs.A, Aa, B, Ba, F and Fa	8385-2003
141948	6	CONTACT SPRING COMPLETE for Refs.A, Aa, F and Fa	8385-2076
132164	7	CONTACT SPRING COMPLETE for Refs.A, Aa, B, Ba, F and Fa	8385-2007
141945	8	CONTACT SPRING COMPLETE for Refs.A, Aa, F and Fa	8385-2075
143200	9	CONTACT SPRING COMPLETE for Refs.A, Aa, F and Fa	8385-2075
	10	MACHINE SCREW NO.14-24 x 3/8" Fil.Hd.Br. (Nickel Plated) with Washer Ref.10a	
29102	10a	WASHER ONLY for Ref.10	7828-139

UNION SWITCH & SIGNAL CO.

PIECE	REF.	DESCRIPTION	DWG. REF.
	11	MACHINE SCREW NO.14-24 x 3/4" Fil.Hd.Br. (Nickel Plated) with 1/4" Plain Lock Washer (1/16" x 1/16") Cad.Pl. and Washer Ref.11a	
36073	11a	WASHER ONLY for Ref.11	7828-161
	12	MACHINE SCREW NO.14-24 x 5/8" Fil.Hd.S. (Cad.Pl.) with Washer Ref.12a	
53627	12a	WASHER ONLY for Ref.12	7828-218
141944	13	SPRING SHIFTER COMPLETE for Refs.A and Aa	8192-344
132169	14	MAIN SHAFT for Refs.A, Aa, B and Ba	12501-14
74503	15	THUMB PIECE, COMPLETE for Refs.A, Aa, B, Ba,and F (For Standard mounting)	11077-6
74502	15a	THUMB PIECE, COMPLETE for Ref.Fa (For inverted mounting)	11077-6
63375	16	SCREW ONLY	8190-306
132636	17	CRANK COMPLETE for Refs.A and B	8192-335
5453	18	COIL SPRING	7770-90
4680	19	PIVOT	C-5860-5
6007	20	PIN (Also used in place of Ref.27 previous to 7-18-31)	8097-34
132165	21	INSULATION COMPLETE for Refs.B and Ba	8750-2170
153210	22	SPOT LIGHT UNIT without Lamp and Lamp Cap	12522-12
	23	SWITCHBOARD LAMP, Type No.2-12 Volts	
150745	24	RED LAMP CAP	12522-11
150746	24a	GREEN LAMP CAP	12522-11
150747	24b	WHITE LAMP CAP	12522-11
155416	24c	AMBER LAMP CAP	12522-11
4679	25	SPRING GUIDE for Refs.17 and 28	C-5860-5
5942	26	SCREW with Nut Ref.26a	8098-132
1505	26a	NUT for Ref.26	8109-11
179682	27	PIN	8097-643
167692	28	CRANK for Refs.Aa and Ba	8192-368
175627	29	CLEAR FROSTED LAMP CAP (Flat)	12522-19
102722	30	BRACKET for Refs.F and Fa	C-9090-3
102724	31	CRANK COMPLETE	8192-413
154829	32	SPOT LIGHT UNIT without Lamp and Lamp Cap	12522-14
154830	33	LAMP HOLDER	12522-15
154847	34	CONTACT SPRING	8385-2185
154849	35	BUSHING	8350-763
154481	36	INSULATING BUSHING	B-10266-1
	37	MACHINE SCREW, NO.3-56 x 5/8" Fil.Hd.S. (N.P.)	
152720	38	WASHER	7828-275

UNION SWITCH & SIGNAL CO.

PIECE	REF.	DESCRIPTION	DWG. REF.
174235	39	INSULATION.....	8750-2503
156117	40	WASHER.....	7828-285
177803	41	TOOL for removing Lamps.....	A-2586-21
	42	PLIERS for removing Lamp Caps.	

PLATE R-12

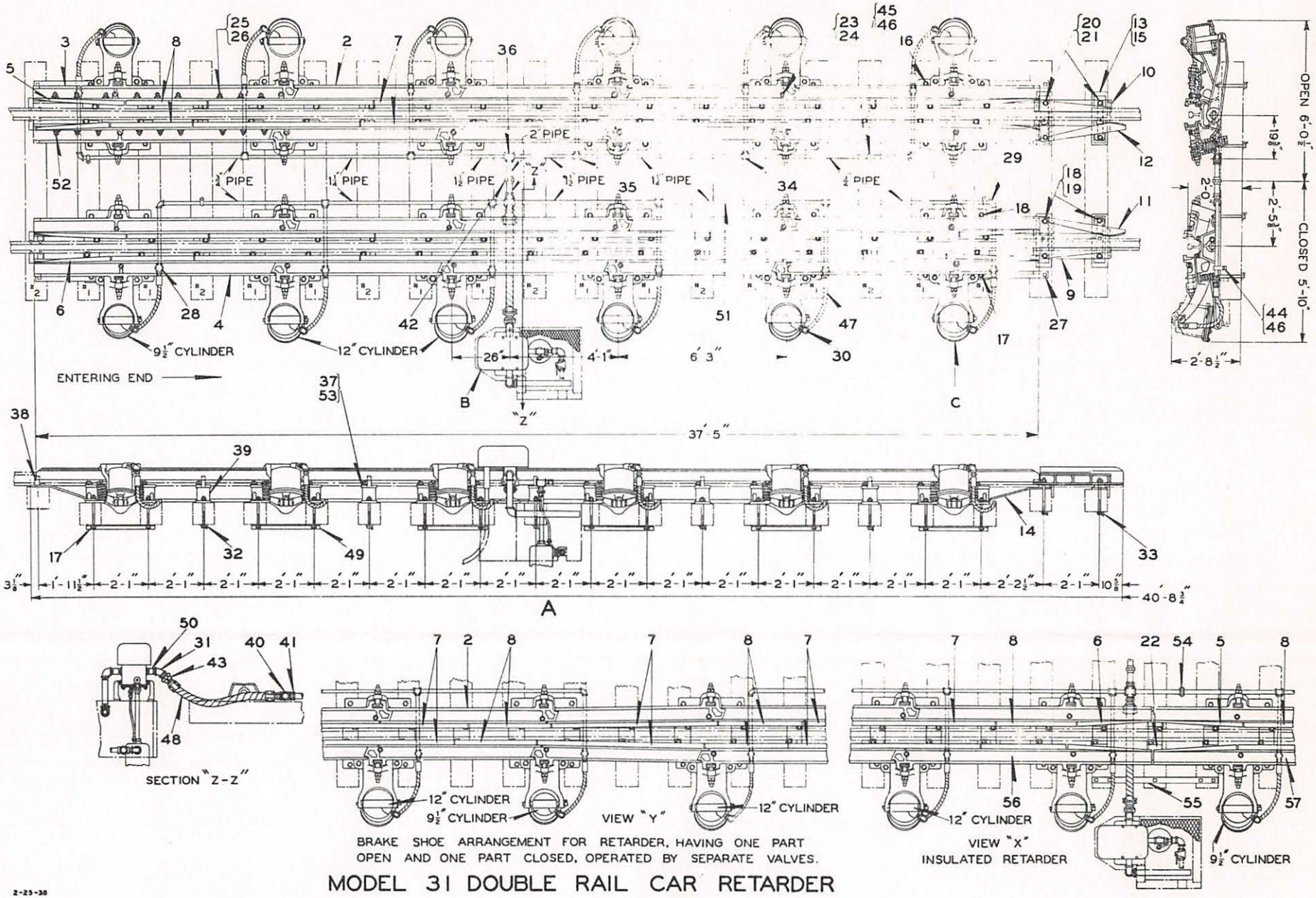

BRAKE SHOE ARRANGEMENT FOR RETARDER, HAVING ONE PART OPEN AND ONE PART CLOSED, OPERATED BY SEPARATE VALVES.

MODEL 31 DOUBLE RAIL CAR RETARDER

2-25-38

UNION SWITCH & SIGNAL CO.

MODEL "31" E.P. DOUBLE RAIL CAR RETARDER

Order by Plate, Piece, Reference and Abbreviated Description Given in Heavy Face Type Only

PIECE	REF.	DESCRIPTION	DWG. REF.
	A	MODEL "31" DOUBLE RAIL CAR RETARDER COMPLETE, orders should be accompanied with the following information:- (1) Weight and section of rail. (2) Number of Cylinder Unit Assemblies. (3) Maximum width of locomotive wheels which must pass through retarder. (4) Non-Insulated as shown or Insulated per View "X". (5) Standard arrangement of Brake Shoes as shown or special arrangement per View "Y".....	C-9460-1
	B	CONTROL VALVE COMPLETE 130-Ohms (When ordering refer to Plate R-34A).....	D-2342-2
	C	CYLINDER UNIT ASSEMBLY COMPLETE (When ordering refer to Plate R-22).....	D-2471-2&3
185001	2	INTERMEDIATE BRAKE SHOE BEAM.....	D-2464-3
185002	3	L.H. END BRAKE SHOE BEAM.....	D-2464-3
185003	4	R.H. END BRAKE SHOE BEAM.....	D-2464-3
185612	5	L.H. END BRAKE SHOE.....	C-9459-1
185613	6	R.H. END BRAKE SHOE.....	C-9459-1
194468	7	LONG INTERMEDIATE BRAKE SHOE.....	C-9459-3
194469	8	SHORT INTERMEDIATE BRAKE SHOE.....	C-9459-3
188380	9	R.H. OUTER GUIDE RAIL.....	D-2464-7
188381	10	L.H. OUTER GUIDE RAIL.....	D-2464-7
177390	11	R.H. INNER GUIDE RAIL.....	D-2464-5
177391	12	L.H. INNER GUIDE RAIL.....	D-2464-6
188411	13	TIE PLATE COMPLETE for Guide Rails (For use with 100# A.R.A. Series A and 105# D.L.& W. Rails) (If for other rails orders should so state).....	C-9458-4
188624	14	TIE BAR, 3/4" x 3-1/2" x 2'-2-5/8" (6-1/8" Set).....	B-9613-38
188414	15	RAIL CLIP for Guide Rails (For use with 100# A.R.A. Series A and 105# D.L.& W. Rails)(If for other rails orders should so state).....	C-9458-4
	16	BOLT, 1-1/4" x 13-1/2" Sq.Hd.S. with 1-1/4" Hex.Nut and 1-1/4" Pl.S.Lock Washer (7/16" x 1/4")	
	17	BOLT, 1-1/4" x 14-1/2" Sq.Hd.S. with 1-1/4" Hex.Nut and 1-1/4" Pl.S.Lock Washer (7/16" x 1/4")	

UNION SWITCH & SIGNAL CO.

PIECE	REF.	DESCRIPTION	DWG. REF.
	18	BOLT, 1-1/4" x 14-1/2" Sq.Hd.S. with 1-1/4" Hex.Nut, 1-1/4" Pl.S.Lock Washer (7/16" x 1/4") and S.A.E. Plate Washer (1-5/16" x 2-1/2" x 5/32") for 5-5/8" - 6-1/8" Rails when Guide Rails are used and for attaching Cylinder Unit to Ties.	
	19	BOLT, 1-1/4" x 15-1/2" Sq.Hd.S. with 1-1/4" Hex.Nut, 1-1/4" Pl.S.Lock Washer (7/16" x 1/4") and S.A.E. Plate Washer (1-5/16" x 2-1/2" x 5/32") for 6-5/8" - 7-1/8" Rails when Guide Rails are used.	
	20	BOLT, 1-1/4" x 16" Sq.Hd.S. with 1-1/4" Hex.Nut, 1-1/4" Pl.S. Lock Washer (7/16" x 1/4") and S.A.E. Plate Washer (1-5/16" x 2-1/2" x 5/32") for 5-5/8" - 6-1/8" Rails	
	21	BOLT, 1-1/4" x 17" Sq.Hd.S. with 1-1/4" Hex.Nut, 1-1/4" Pl.S. Lock Washer (7/16" x 1/4") and S.A.E. Plate Washer (1-5/16" x 2-1/2" x 5/32") for 6-5/8" - 7-1/8" Rails	
	22	INTERMEDIATE RAIL SUPPORT for Insulated Rail Joint (When ordering refer to Plate R-140).....	D-2472-6
194423	23	BOLT, 1-3/4" x 5-5/8" (Brake Beam Hold Down) with Nut Ref.24, 1-3/4" Pl.S.Lock Washer (1/2" x 5/16") and 13/64" x 3" (S.A.E.) Steel Cotter.....	C-9458-6
209281	24	NUT for Ref.23.....	C-9458-9
	25	BOLT, Ref.25a, 7/8" x 3-5/8" (Brake Shoe) with Washer Ref.26, 7/8" Hex.Nut and 7/8" Pl.S.Lock Washer(11/32" x 1/4")(Cad.Pl.)	8832-147
187273	25a	BOLT ONLY, 7/8" x 3-5/8" for Refs.25 and 52.....	8832-147
185873	26	WASHER for Refs.25 and 52.....	C-9458-5
	27	LAG SCREW, 3/4" x 6" (Tie Bars)	
	28	3/4" WABCO STOP COCK #22303(Without Handle Ref.12, Plate R-149)	
	29	3/4" - 90° M.I. GALV.ELL	
	30	3/4" - 90° M.I. GALV.R.R. MALE UNION ELL	
	31	2-1/2" - 45° M.I. GALV.ELL	
188620	32	ANGLE WASHER (Int.Rail Supports).....	B-10302-5
188622	33	ANGLE WASHER (Guide Rails).....	B-10302-5
	34	1-1/4" x 3/4" x 3/4" M.I. GALV.TEE	
	34a	1" x 3/4" x 3/4" M.I. GALV.TEE	
	34b	1-1/4" x 1" x 3/4" M.I. GALV.TEE	
	35	1-1/2" x 1-1/4" x 3/4" M.I. GALV.TEE	
	35a	1-1/2" x 1-1/2" x 3/4" M.I. GALV.TEE	
	35b	1-1/4" x 1-1/4" x 3/4" M.I. GALV.TEE	
	36	1-1/2" x 1-1/2" x 2" M.I. GALV.TEE	
	36a	1-1/2" x 1-1/4" x 2" M.I. GALV.TEE	
	36b	1-1/4" x 1-1/4" x 2" M.I. GALV.TEE	
177560	37	RAIL CLIP.....	C-9458-5
	38	END RAIL SUPPORT (When ordering refer to Plate R-140).....	D-2472-3
	39	INTERMEDIATE RAIL SUPPORT (When ordering refer to Plate R-140)	D-2472-2
	40	2-1/2" x 2-1/2" x 1-1/2" M.I. GALV.CROSS	

UNION SWITCH & SIGNAL CO.

PIECE	REF.	DESCRIPTION	DWG. REF.
	41	2-1/2" x 2" M.I. GALV.REDUCING BUSHING	
	41a	1-1/2" x 1-1/4" M.I. GALV.REDUCING BUSHING	
	41b	1-1/2" x 3/4" M.I.GALV.REDUCING BUSHING	
	42	2" M.I. GALV.R.R.UNION	
	43	2-1/2" M.I. GALV.MALE AND FEMALE R.R.UNION	
	43a	2" M.I. GALV.MALE AND FEMALE R.R.UNION	
211053	44	CLAMP.....	B-9943-52
	45	1" CONDUIT CLAMP (Galv.)	
	46	5/16" x 2" LAG SCREW (Galv.)	
188458	47	3/4" HOSE CONNECTION.....	B-9046-5
188468	48	2-1/2" HOSE CONNECTION.....	B-9046-11
194547	48a	2" HOSE CONNECTION.....	B-9046-11
188619	49	ANGLE WASHER (Rail Supports under Cylinders).....	B-10302-4
188477	50	2-1/2" NIPPLE 6" LONG.....	B-10375-2
196327	50a	2-1/2" NIPPLE 12" LONG.....	B-10919-4
	51	PIPE (Orders should specify size and length of Pipe desired)..	B-10919-4
	52	BOLT, Ref.25a, 7/8" x 3-5/8" with Washer Ref.26, 7/8" Pl.S. Lock Washer (11/32" x 1/4") (Cad.Pl.), 7/8" Hex.Nut and Washer Ref.52a (For End Brake Shoes Only).....	8832-147
54116	52a	WASHER for Ref.52.....	7826-117
	53	BOLT, 7/8" x 3" Sq.Hd.S. with 7/8" retainer Nut for Ref.37	
149779	54	1-1/2" INSULATED UNION COMPLETE.....	B-9646-1
116694	54a	2" INSULATED UNION COMPLETE.....	B-9646-1
207279	55	TIE BAR, 3/4" x 2-1/2" x 4'-9".....	B-9613-38
206872	56	L.H. END BRAKE SHOE BEAM (Where insulated joint is used).....	D-2464-3
206873	57	R.H. END BRAKE SHOE BEAM (Where insulated joint is used).....	D-2464-3

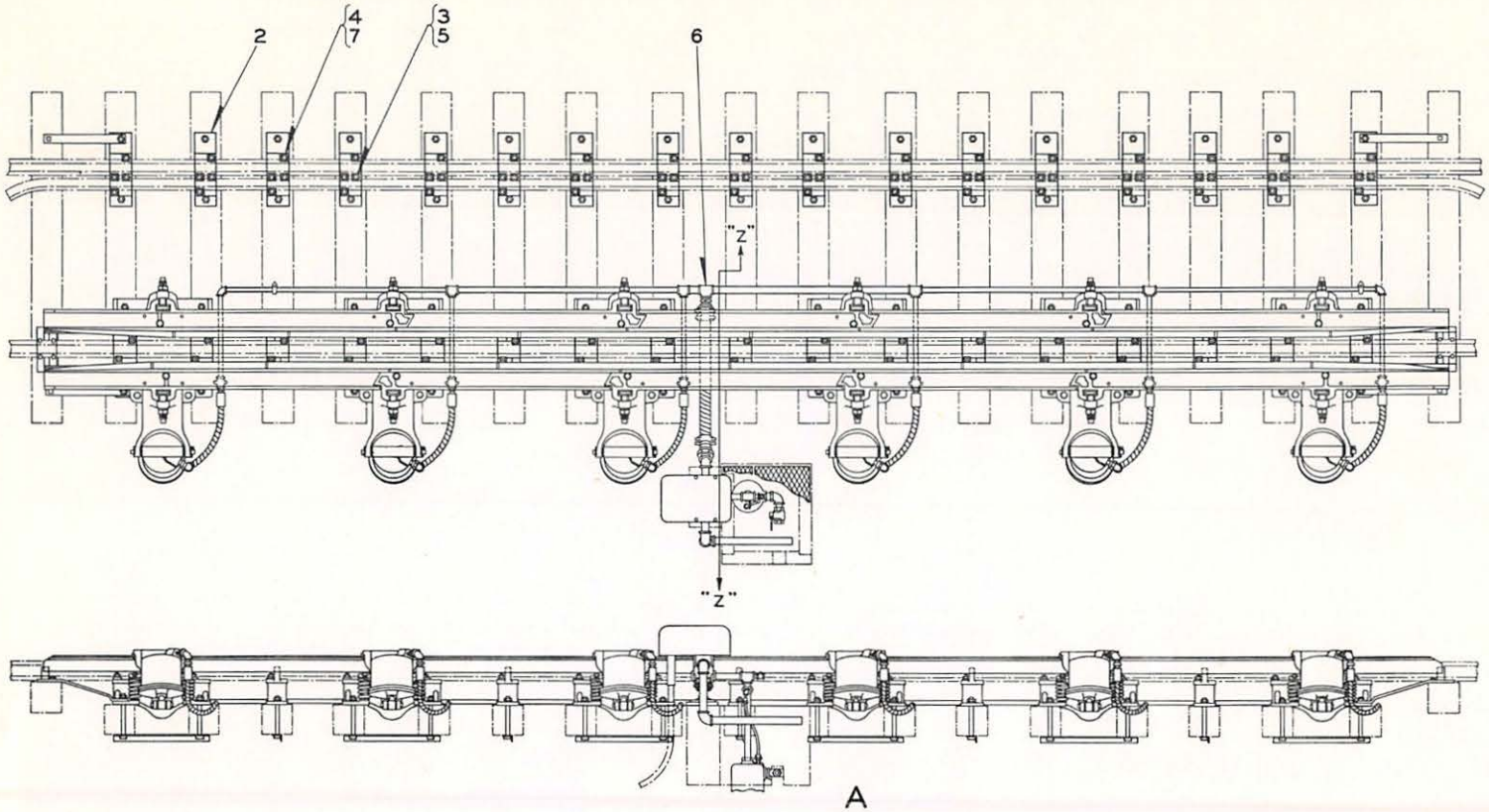

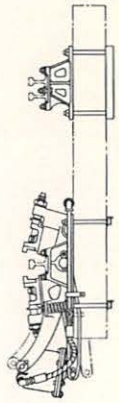

FOR ALL OTHER DETAILS AND DIMENSIONS REFER TO PLATE R-12

A

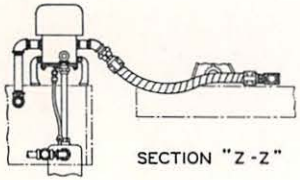

SECTION "Z-Z"

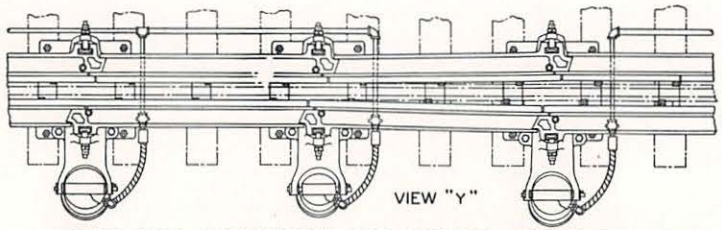

VIEW "Y"

BRAKE SHOE ARRANGEMENT FOR RETARDER, HAVING ONE PART OPEN AND ONE PART CLOSED, OPERATED BY SEPARATE VALVES.

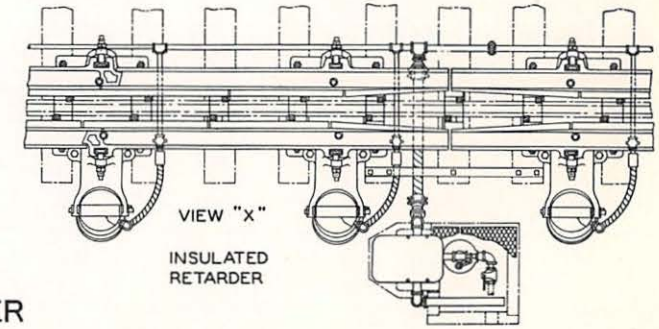

VIEW "X"

INSULATED RETARDER

MODEL 31 SINGLE RAIL CAR RETARDER

UNION SWITCH & SIGNAL CO.

MODEL "31" E.P. SINGLE RAIL CAR RETARDER

For details not shown on this Plate refer to Plate R-12.

Order by Plate, Piece, Reference and Abbreviated Description Given in Heavy Face Type Only

PIECE	REF.	DESCRIPTION	DWG. REF.
	A	MODEL "31" SINGLE RAIL CAR RETARDER COMPLETE, orders should be accompanied with the following information:- (1) Weight and section of rail. (2) Number of Cylinder Unit Assemblies. (3) Maximum width of locomotive wheels which must pass through retarder. (4) Non-Insulated as shown or Insulated per View "X". (5) Standard arrangement of Brake Shoes as shown or special arrangement per View "Y".....	C-9460-1
	2	RAIL SUPPORT for Guard Rail (When ordering refer to Plate R-140).....	D-2472-
207090	3	RAIL CLIP for use with Guard Rail.....	C-9458-5
177560	4	RAIL CLIP.....	C-9458-5
	5	BOLT, 7/8" x 3-3/4" Sq.Hd.S. with 7/8" Retainer Nut for Ref.3	
	6	TEE, 1-1/2" x 1-1/2" x 2" M.I.GALV.	
	7	BOLT, 7/8" x 3" Sq.Hd.S. with 7/8" Retainer Nut for Ref.4	

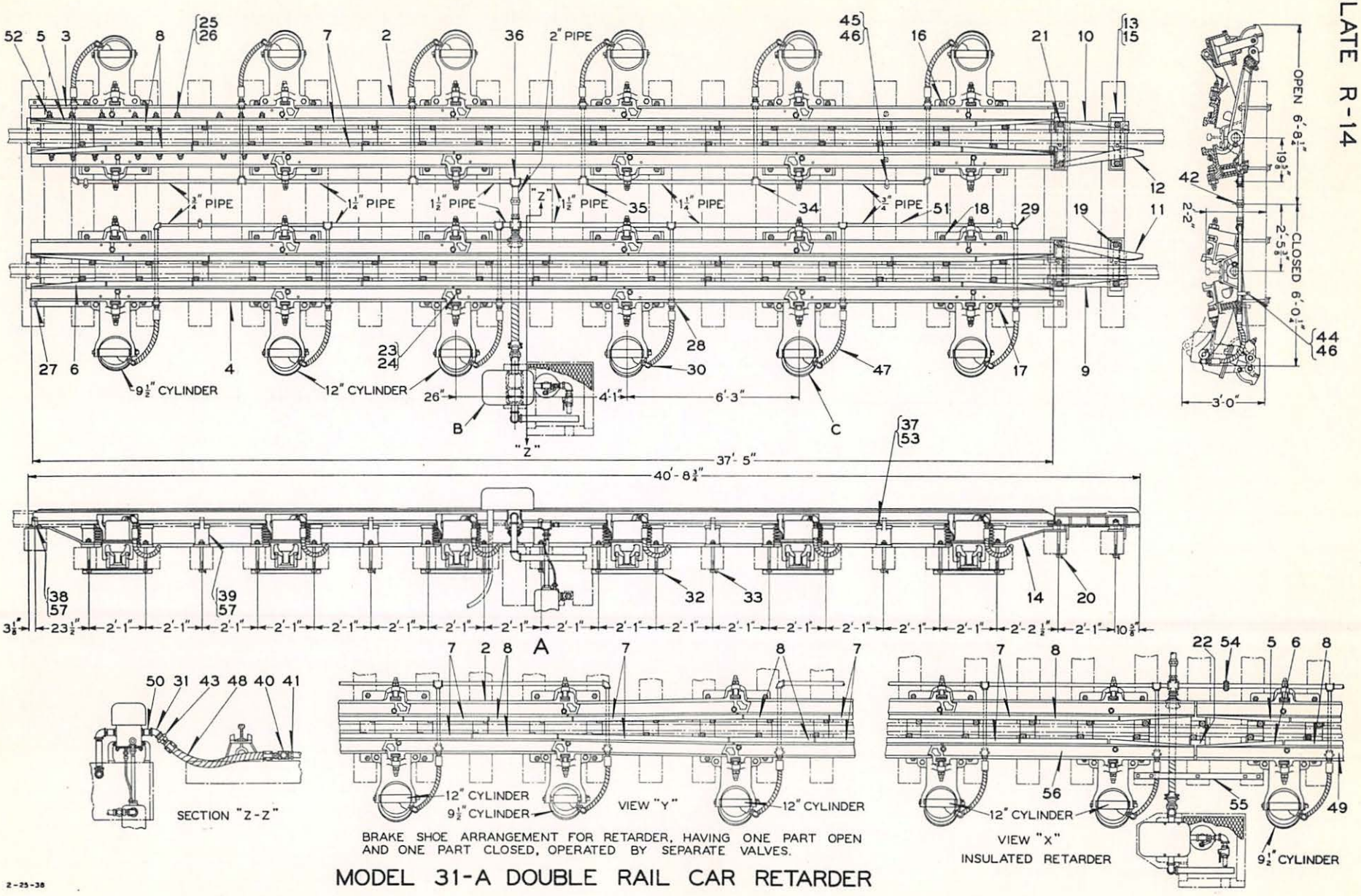

BRAKE SHOE ARRANGEMENT FOR RETARDER, HAVING ONE PART OPEN AND ONE PART CLOSED, OPERATED BY SEPARATE VALVES.

MODEL 31-A DOUBLE RAIL CAR RETARDER

2-25-38

UNION SWITCH & SIGNAL CO.

MODEL "31A" E.P. DOUBLE RAIL CAR RETARDER

Order by Plate, Piece, Reference and Abbreviated Description Given in Heavy Face Type Only

PIECE	REF.	DESCRIPTION	DWG. REF.
	A	MODEL "31A" DOUBLE RAIL CAR RETARDER COMPLETE, orders should be accompanied with the following information:- (1) Weight and section of rail. (2) Number of Cylinder Unit Assemblies. (3) Non-Insulated as shown or Insulated per View "X" (4) Standard arrangement of Brake Shoes as shown or special arrangement per View "Y".....	C-9460-2
	B	CONTROL VALVE COMPLETE 130-Ohms (When ordering refer to Plate R-34A).....	D-2342-2
	C	CYLINDER UNIT ASSEMBLY COMPLETE (When ordering refer to Plate R-22A).....	D-2471-6
185001	2	INTERMEDIATE BRAKE SHOE BEAM.....	D-2464-3
185002	3	L.H. END BRAKE SHOE BEAM.....	D-2464-3
185003	4	R.H. END BRAKE SHOE BEAM.....	D-2464-3
185612	5	L.H. END BRAKE SHOE.....	C-9459-1
185613	6	R.H. END BRAKE SHOE.....	C-9459-1
194468	7	LONG INTERMEDIATE BRAKE SHOE.....	C-9459-3
194469	8	SHORT INTERMEDIATE BRAKE SHOE.....	C-9459-3
188380	9	R.H. OUTER GUIDE RAIL.....	D-2464-7
188381	10	L.H. OUTER GUIDE RAIL.....	D-2464-7
177390	11	R.H. INNER GUIDE RAIL.....	D-2464-5
177391	12	L.H. INNER GUIDE RAIL.....	D-2464-6
207101	13	TIE PLATE COMPLETE for Guide Rails (For use with 130# P.S. Rail) (If for other rails orders should so state).....	C-9458-4
208357	14	TIE BAR, 3/4" x 3-1/2" x 2'-2-5/8" (7" Set).....	B-9613-38
207099	15	RAIL CLIP for Guide Rails (For use with 130# P.S.Rail) (If for other rails orders should so state).....	C-9458-4
	16	BOLT, 1-1/4" x 13-1/2" Sq.Hd.S. with 1-1/4" Hex.Nut and 1-1/4" Pl.S.Lock Washer (7/16" x 1/4")	
	17	BOLT, 1-1/4" x 14-1/2" Sq.Hd.S. with 1-1/4" Hex.Nut and 1-1/4" Pl.S.Lock Washer (7/16" x 1/4")	
	18	BOLT, 1-1/4" x 14-1/2" Sq.Hd.S. with 1-1/4" Hex.Nut, 1-1/4" Pl.S.Lock Washer (7/16" x 1/4") and S.A.E. Plate Washer (1-5/16" x 2-1/2" x 5/32")	

UNION SWITCH & SIGNAL CO.

PIECE	REF.	DESCRIPTION	DWG. REF.
	19	BOLT, 1-1/4" x 15-1/2" Sq.Hd.S. with 1-1/4" Hex.Nut, 1-1/4" Pl.S.Lock Washer (7/16" x 1/4") and S.A.E. Plate Washer (1-5/16" x 2-1/2" x 5/32") for 6-5/8" - 7-1/8" Rails when Guide Rails are used.	
188622	20	ANGLE WASHER (Guide Rails).....	B-10302-5
	21	BOLT, 1-1/4" x 17" Sq.Hd.S. with 1-1/4" Hex.Nut, 1-1/4" Pl.S. Lock Washer (7/16" x 1/4") and S.A.E. Plate Washer (1-5/16" x 2-1/2" x 5/32") for 6-5/8" - 7-1/8" Rails.	
	22	INTERMEDIATE RAIL SUPPORT for Insulated Rail Joint (When ordering refer to Plate R-140).....	D-2472-6
194423	23	BOLT, 1-3/4" x 5-5/8" (Brake Beam Hold Down) with Nut Ref.24, 1-3/4" Pl.S.Lock Washer (1/2" x 5/16") and 13/64" x 3"(S.A.E.) Steel Cotter.....	C-9458-6
209281	24	NUT for Ref.23.....	C-9458-9
	25	BOLT, Ref.25a, 7/8" x 3-5/8" (Brake Shoe) with Washer Ref.26, 7/8" Hex.Nut and 7/8" Pl.S.Lock Washer (11/32" x 1/4")(Cad.Pl.)	8832-147
187273	25a	BOLT ONLY, 7/8" x 3-5/8" for Refs.25 and 52.....	8832-147
185873	26	WASHER for Refs.25 and 52.....	C-9458-5
	27	LAG SCREW, 3/4" x 6" (Tie Bars)	
	28	3/4" WABCO STOP COCK #27303(Without Handle Ref.12, Plate R-149)	
	29	3/4" - 90° M.I. GALV.ELL	
	30	3/4" - 90° M.I. GALV.R.R.MALE UNION ELL	
	31	2-1/2" - 45° M.I. GALV.ELL	
188619	32	ANGLE WASHER (Rail supports under cylinders).....	B-10302-4
208587	33	ANGLE WASHER (Int.Rail Supports).....	B-10302-5
	34	1-1/4" x 3/4" x 3/4" M.I. GALV.TEE	
	34a	1" x 3/4" x 3/4" M.I. GALV.TEE	
	34b	1-1/4" x 1" x 3/4" M.I. GALV.TEE	
	35	1-1/2" x 1-1/4" x 3/4" M.I. GALV.TEE	
	35a	1-1/2" x 1-1/2" x 3/4" M.I. GALV.TEE	
	36	1-1/2" x 1-1/2" x 2" M.I. GALV.TEE	
	36a	1-1/2" x 1-1/4" x 2" M.I. GALV.TEE	
206496	37	RAIL CLIP.....	C-9458-5
	38	END RAIL SUPPORT (When ordering refer to Plate R-140).....	D-2472-3
	39	INTERMEDIATE RAIL SUPPORT (When ordering refer to Plate R-140)	D-2472-2
	40	2-1/2" x 2-1/2" x 1-1/2" M.I. GALV.CROSS	
	41	2-1/2" x 2" M.I. GALV.REDUCING BUSHING	
	41a	1-1/2" x 1-1/4" M.I. GALV.REDUCING BUSHING	
	41b	1-1/2" x 3/4" M.I. GALV.REDUCING BUSHING	
	42	2" M.I. GALV.R.R.UNION	

UNION SWITCH & SIGNAL CO.

PIECE	REF.	DESCRIPTION	DWG. REF.
	43	2-1/2" M.I. GALV.MALE AND FEMALE R.R.UNION	
211053	44	CLAMP	B-9943-52
	45	1" CONDUIT CLAMP (Galv.)	
	46	5/16" x 2" LAG SCREW (Galv.)	
188458	47	3/4" HOSE CONNECTION	B-9046-5
188468	48	2-1/2" HOSE CONNECTION	B-9046-11
206873	49	R.H. END BRAKE SHOE BEAM (Where insulated joint is used)	D-2464-3
188477	50	2-1/2" NIPPLE 6" LONG	B-10375-2
	51	PIPE (Orders should specify size and length of Pipe desired)	B-10919-4
	52	BOLT, Ref.25a, 7/8" x 3-5/8" with Washer Ref.26, 7/8" Pl.S. Lock Washer (11/32" x 1/4") (Cad.Pl.), 7/8" Hex.Nut and Washer Ref.52a (For End Brake Shoes only)	8832-147
54116	52a	WASHER for Ref.52	7826-117
	53	BOLT, 7/8" x 3-3/4" Sq.Hd.S. with 7/8" Retainer Nut for Ref.37	
149779	54	1-1/2" INSULATED UNION COMPLETE	B-9646-1
116694	54a	2" INSULATED UNION COMPLETE	B-9646-1
207279	55	TIE BAR, 3/4" x 2-1/2" x 4'-9"	B-9613-38
210255	55a	TIE BAR, 3/4" x 2-1/2" x 2'-8"	B-9613-43
206872	56	L.H. END BRAKE SHOE BEAM (Where insulated joint is used)	D-2464-3
	57	FILLER PLATE (When ordering refer to Plate R-140)	C-9458-8

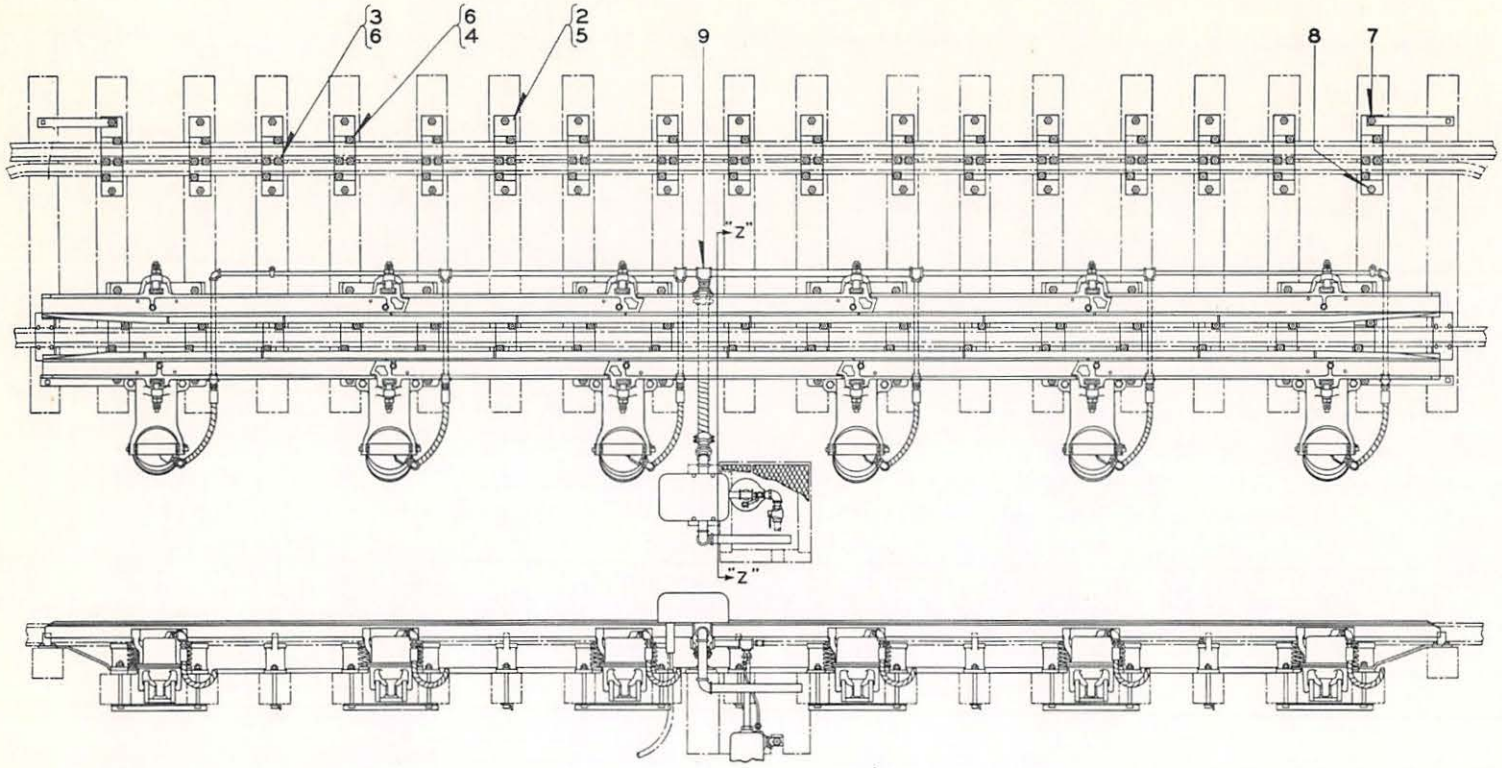

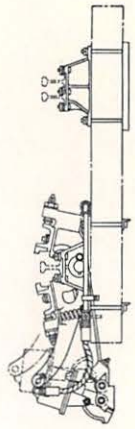

A

FOR ALL OTHER DETAILS AND DIMENSIONS REFER TO PLATE R-14

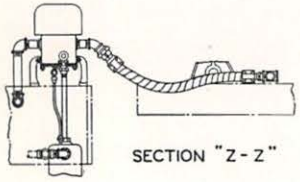

SECTION "Z-Z"

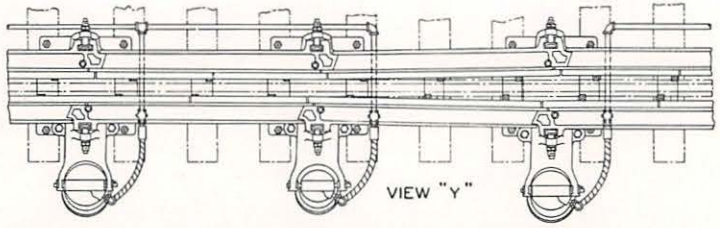

VIEW "Y"

BRAKE SHOE ARRANGEMENT FOR RETARDER, HAVING ONE PART OPEN AND ONE PART CLOSED, OPERATED BY SEPARATE VALVES.

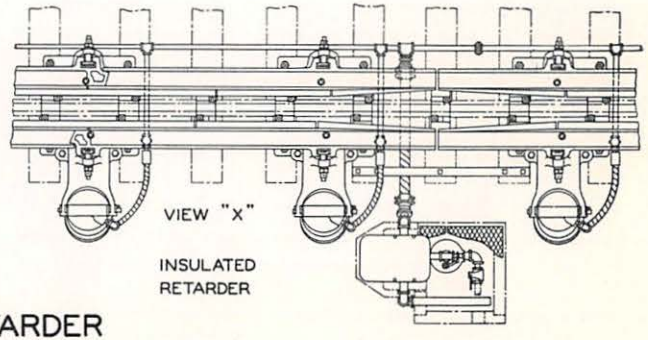

VIEW "X"

INSULATED RETARDER

MODEL 31A SINGLE RAIL CAR RETARDER

2-25-38

UNION SWITCH & SIGNAL CO.

MODEL "31A" E.P. SINGLE RAIL CAR RETARDER

For details not shown on this Plate refer to Plate R-14.

Order by Plate, Piece, Reference and Abbreviated Description Given in Heavy Face Type Only

PIECE	REF.	DESCRIPTION	DWG. REF.
	A	MODEL "31A" SINGLE RAIL CAR RETARDER COMPLETE, orders should be accompanied with the following information:- (1) Weight and section of rail. (2) Number of Cylinder Unit Assemblies. (3) Non-Insulated as shown or Insulated per View "X". (4) Standard arrangement of Brake Shoes as shown or Special arrangement per View "Y".....	C-9460-2
	2	RAIL SUPPORT for Guard Rail (When ordering refer to Plate R-140).....	D-2472-
210056	3	RAIL CLIP for use with Guard Rail.....	C-9458-5
206496	4	RAIL CLIP.....	C-9458-5
	5	FILLER PLATE (When ordering refer to Plate R-140).....	C-9458-10
	6	BOLT, 7/8" x 3-3/4" Sq.Hd.S. with 7/8" Retainer Nut	
	7	BOLT, 1-1/4" x 14-1/2" Sq.Hd. with 1-1/4" Hex.Nut and 1-1/4" Pl.S.Lock Washer (7/16" x 1/4")	
	8	BOLT, 1-1/4" x 13-1/2" Sq.Hd. with 1-1/4" Hex.Nut and 1-1/4" Pl.S.Lock Washer (7/16" x 1/4")	
	9	TEE, 1-1/2" x 1-1/2" x 2" M.I.GALV.	

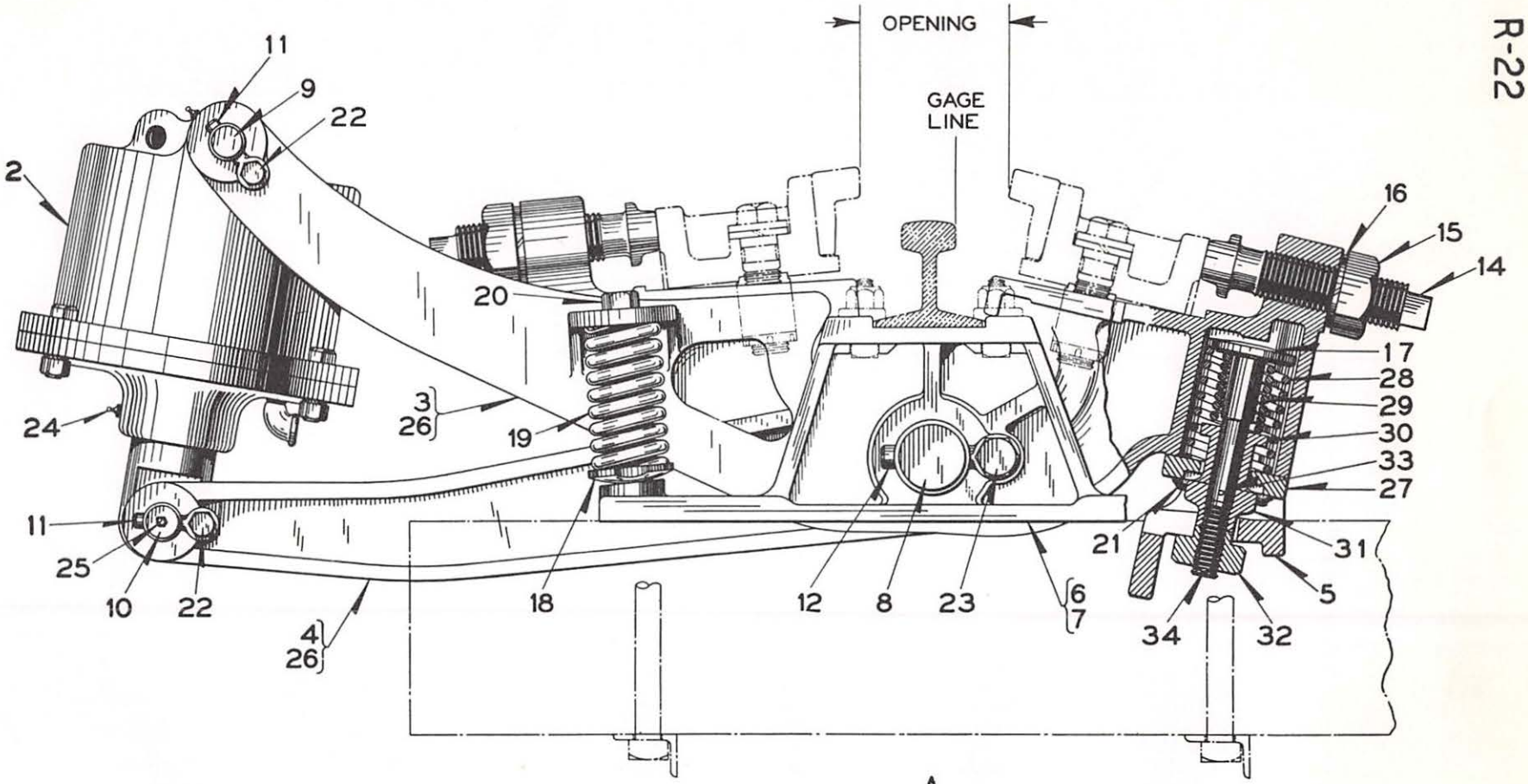

A

CYLINDER UNIT ASSEMBLY

UNION SWITCH & SIGNAL CO.

MODEL "31" E.P. CAR RETARDER

DETAIL PARTS

CYLINDER UNIT ASSEMBLY

Order by Plate, Piece, Reference and Abbreviated Description Given in Heavy Face Type Only

CYLINDER UNIT ASSEMBLY COMPLETE FOR MODEL "31" CAR RETARDER

PIECE	REF.	CYLINDER	RAIL SUPPORT BEARINGS R.H.	RAIL SUPPORT BEARINGS L.H.	USED WITH RAILS	DWG.REF.
195382	A	Ref.2	Ref.6	Ref.7	100# A.R.A.Series A 105# D.L.& W.	D-2471-3
194466	Aa	Ref.2	Ref.6b	Ref.7b	80# A.S.C.E.	D-2471-3
188555	Ab	Ref.2a	Ref.6	Ref.7	100# A.R.A.Series A	D-2471-2
195383	Ac	Ref.2b	Ref.6	Ref.7	100# A.R.A.Series A 105# D.L.& W.	D-2471-3
194467	Ad	Ref.2b	Ref.6b	Ref.7b	80# A.S.C.E.	D-2471-3
188556	Ae	Ref.2c	Ref.6	Ref.7	100# A.R.A.Series A	D-2471-2

Note:- If Cylinder Unit Assemblies other than those listed are required orders should so state, giving weight and section of rail.

PIECE	REF.	DESCRIPTION	DWG.REF.
194394	2	9-1/2" CYLINDER COMPLETE with 6" Stroke for 7" opening (For details refer to Plate R-22E).....	C-9418-5
188171	2a	9-1/2" CYLINDER COMPLETE with 7-1/2" Stroke for 7-1/2" opening (For details refer to Plate R-22E).....	C-9418-4
194451	2b	12" CYLINDER COMPLETE with 6" Stroke for 7" opening (For details refer to Plate R-22E).....	C-9418-6
188169	2c	12" CYLINDER COMPLETE with 7-1/2" Stroke for 7-1/2" opening (For details refer to Plate R-22E).....	C-9418-3
187893	3	UPPER LEVER COMPLETE with Bushings.....	D-2464-2
187934	4	LOWER LEVER COMPLETE with Bushings.....	D-2464-1
188134	5	LOWER LEVER STOP SUPPORT.....	D-2464-4
188392	6	R.H. RAIL SUPPORT BEARING for use with 100# A.R.A. Series A and 105# D.L.& W. Rails.....	D-2472-1
187553	6a	R.H. RAIL SUPPORT BEARING for use with 130# P.S.Rail.....	D-2472-1
194454	6b	R.H. RAIL SUPPORT BEARING for use with 80# A.S.C.E. Rail.....	D-2472-1
188393	7	L.H. RAIL SUPPORT BEARING for use with 100# A.R.A. Series A and 105# D.L.& W. Rails.....	D-2472-1
187554	7a	L.H. RAIL SUPPORT BEARING for use with 130# P.S.Rail.....	D-2472-1
194455	7b	L.H. RAIL SUPPORT BEARING for use with 80# A.S.C.E. Rail.....	D-2472-1

UNION SWITCH & SIGNAL CO.

PIECE	REF.	DESCRIPTION	DWG. REF.
188426	8	LEVER FULCRUM PIN	12734-1
188427	9	UPPER LEVER PIN	12734-2
188428	10	LOWER LEVER PIN	12734-3
188429	11	UPPER AND LOWER LEVER PIN RETAINER	12734-4
188430	12	LEVER FULCRUM PIN RETAINER (used on R.H. Rail Support Bearing Side)	12734-5
188431	13	LEVER FULCRUM PIN RETAINER with two 1/4" x 2" S.Cotters (Not Shown) (used on L.H. Rail Support Bearing Side)	12734-6
	14	BRAKE BEAM ADJUSTING SCREW with Lock Nut Ref.15 and Washer Ref.16	C-9458-
188347	14a	BRAKE BEAM ADJUSTING SCREW ONLY, for Ref.14	C-9458-2
188343	15	LOCK NUT	8265-302
	16	2-1/4" SPRING WASHER (9/16" x 19/64")	
188345	17	LOWER LEVER SPRING BOLT COMPLETE with Cap, Springs and Nuts (Inc.1-17a, 1-27, 1-28, 1-29, 1-30, 1-31, 1-32, 1-33 and 1-34)	C-9458-1
188344	17a	LOWER LEVER SPRING BOLT ONLY, for Ref.17	C-9458-1
188349	18	UPPER LEVER STOP SPRING NUT with Retainer	C-9458-3
194465	19	UPPER LEVER STOP SPRING for 7" opening	7770-522
188290	19a	UPPER LEVER STOP SPRING for 7-1/2" opening	7770-506
209349	20	BOLT, 1" x 5" Hex.Hd. for 7" opening	8479-267
208996	20a	BOLT, 1" x 4" Hex.Hd. for 7-1/2" opening	8479-267
207937	21	BOLT, 3/4" x 2-1/2" Tee Head with 3/4" Retainer Nut	8132-392
	22	TAP BOLT, 3/4" x 1-3/4" Hex.Hd. with 3/4" Pl.S. Lock Washer (5/16" x 7/32")	
	23	TAP BOLT, 1-1/8" x 2-1/2" Hex.Hd. with 1-1/8" Pl.S.Lock Washer (3/8" x 1/4")	
	24	1/8" P.T. STRAIGHT ALEMITE HYDRAULIC FITTING	
	25	1/8" P.T. 67-1/2° ALEMITE HYDRAULIC FITTING	
188423	26	BUSHING for Refs.3 and 4	8092-93
188001	27	CAP	C-9458-3
188288	28	SPRING	7770-504
188289	29	SPRING	7770-505
188342	30	BUSHING	8092-100
188491	31	LOWER LEVER SPRING STOP NUT	8265-316
188346	32	LOWER LEVER SPRING BOLT NUT	8265-317
188609	33	TAPER PIN	8059-51
	34	S.COTTER, 1/4" x 1-3/4"	

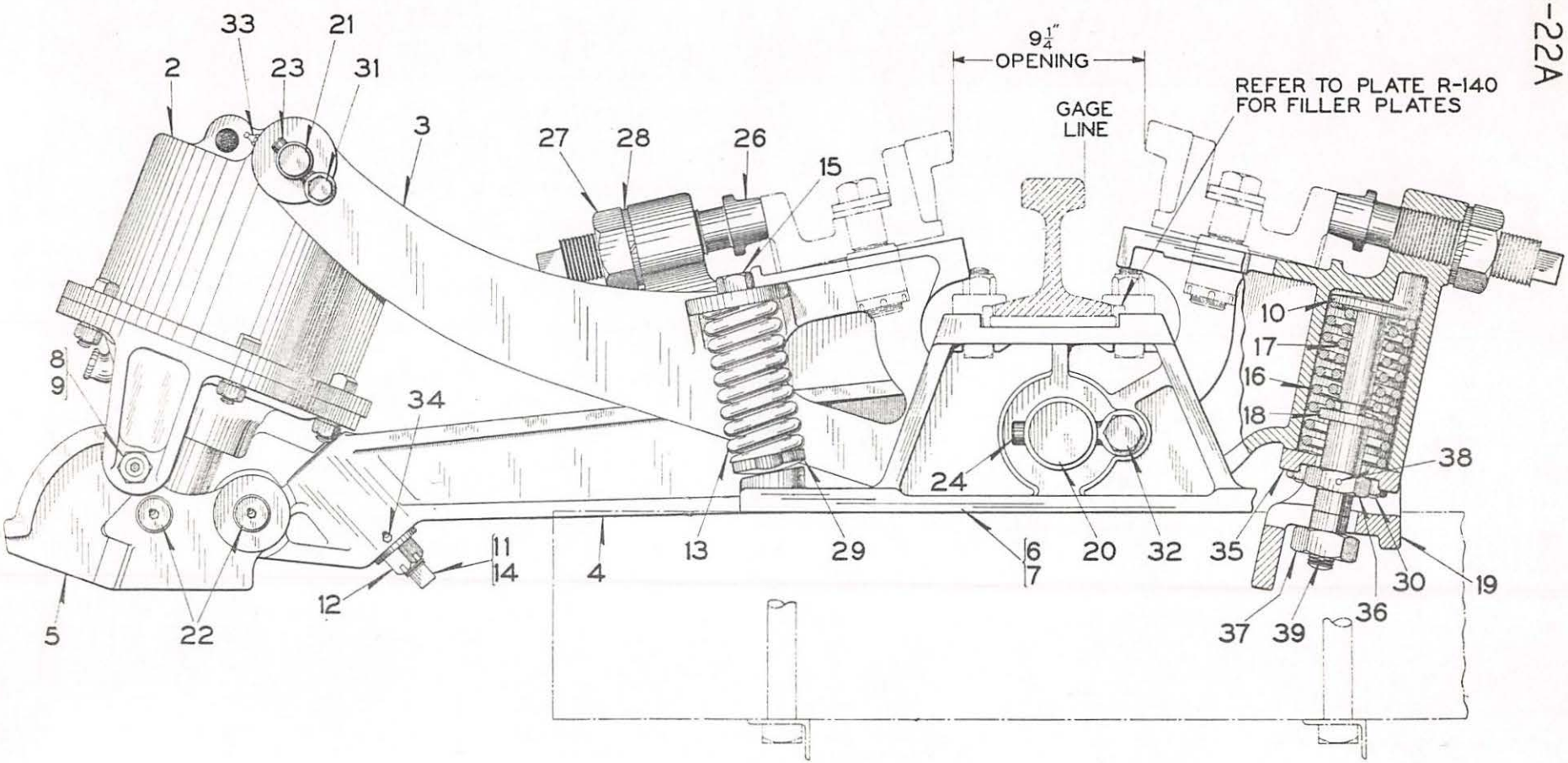

A

CYLINDER UNIT ASSEMBLY

2-25-38

UNION SWITCH & SIGNAL

MODEL "31A" CAR RETARDER

DETAIL PARTS

CYLINDER UNIT ASSEMBLY

Order by Plate, Piece, Reference and Abbreviated Description Given in Heavy Face Type Only

CYLINDER UNIT ASSEMBLY COMPLETE FOR MODEL "31A" CAR RETARDER

PIECE	REF.	CYLINDER	RAIL SUPPORT BEARINGS R.H.	RAIL SUPPORT BEARINGS L.H.	USED WITH RAILS	DWG.REF.
199801	A	Ref.2	Ref.6	Ref.7	130# P.S.	D-2471-6
199804	Aa	Ref.2a	Ref.6	Ref.7	130# P.S.	D-2471-6

Note:- If Cylinder Unit Assemblies other than those listed are required orders should so state, giving weight and section of rail.

PIECE	REF.	DESCRIPTION	DWG.REF.
199787	2	12" CYLINDER COMPLETE with 6" Stroke for 9-1/4" opening (For details refer to Plate R-22G)	C-9418-7
199796	2a	9-1/2" CYLINDER COMPLETE with 6" Stroke for 9-1/4" opening (For details refer to Plate R-22G)	C-9418-8
184735	3	UPPER LEVER with Bushings	D-2464-10
184733	4	LOWER LEVER with Bushings	D-2464-8
195581	5	TOGGLE LINK	D-2464-9
199770	6	R.H. RAIL SUPPORT BEARING for use with 131# P.S.Rail	D-2472-4
184995	6a	R.H. RAIL SUPPORT BEARING for use with 130# P.S.Rail	D-2472-4
199771	7	L.H. RAIL SUPPORT BEARING for use with 131# P.S.Rail	D-2472-4
184996	7a	L.H. RAIL SUPPORT BEARING for use with 130# P.S.Rail	D-2472-4
100448	8	ROLLER STUD with 7/8" Hex.Nut and 7/8" Pl.S. Lock Washer (11/32" x 1/4")	8091-101
100449	9	ROLLER	8072-826
199774	10	LOWER LEVER SPRING BOLT with Cap and Springs (Inc.1-10a, 1-16, 1-17, 1-18, 1-35, 1-36, 1-37 and 1-38)	C-9458-7
199773	10a	LOWER LEVER SPRING BOLT ONLY, for Ref.10	C-9458-7
199776	11	LOWER LEVER SPRING STOP PLUNGER	C-9458-7
100485	12	SLEEVE NUT	8265-341
100480	13	UPPER LEVER STOP SPRING	7770-543
100477	14	TOGGLE LINK STOP SPRING	7770-540
209350	15	BOLT, 1" x 6" Hex.Hd.	8479-267
100478	16	SPRING	7770-541

UNION SWITCH & SIGNAL

PIECE	REF.	DESCRIPTION	DWG. REF.
100479	17	SPRING	7770-542
185598	18	BUSHING	8092-100
188134	19	LOWER LEVER STOP SUPPORT	D-2464-4
188426	20	LEVER FULCRUM PIN	12734-1
188427	21	UPPER LEVER PIN	12734-2
188428	22	LOWER LEVER PIN	12734-3
188429	23	UPPER AND LOWER LEVER PIN RETAINER	12734-4
188430	24	LEVER FULCRUM PIN RETAINER (Used on R.H.Rail Support Bearing Side)	12734-5
188431	25	LEVER FULCRUM PIN RETAINER with two 1/4" x 2" S.Cotters (Used on L.H. Rail Support Bearing Side) (Not shown)	12734-6
	26	BRAKE BEAM ADJUSTING SCREW with Lock Nut Ref.27 and Washer Ref.28	C-9458-
188347	26a	BRAKE BEAM ADJUSTING SCREW ONLY, for Ref.26	C-9458-2
188343	27	LOCK NUT	8265-302
	28	2-1/4" SPRING WASHER (9/16" x 19/64")	
188349	29	UPPER LEVER STOP SPRING NUT WITH RETAINER	C-9458-3
207937	30	BOLT, 3/4" x 2-1/2" Tee Head with 3/4" Retainer Nut	8132-392
	31	TAP BOLT, 3/4" x 1-3/4" Hex.Hd. with 3/4" Pl.S. Lock Washer (5/16" x 7/32")	
	32	TAP BOLT, 1-1/8" x 2-1/2" Hex.Hd. with 1-1/8" Pl.S. Lock Washer (3/8" x 1/4")	
	33	1/8" P.T. STRAIGHT ALEMITE HYDRAULIC FITTING	
	34	1/8" P.T. 67-1/2° ALEMITE HYDRAULIC FITTING	
188001	35	CAP	C-9458-3
188491	36	LOWER LEVER SPRING STOP NUT	8265-316
188346	37	LOWER LEVER SPRING BOLT NUT	8265-317
188609	38	TAPER PIN	8059-51
	39	S.COTTER, 1/4" x 1-3/4"	

PLATE R-22E

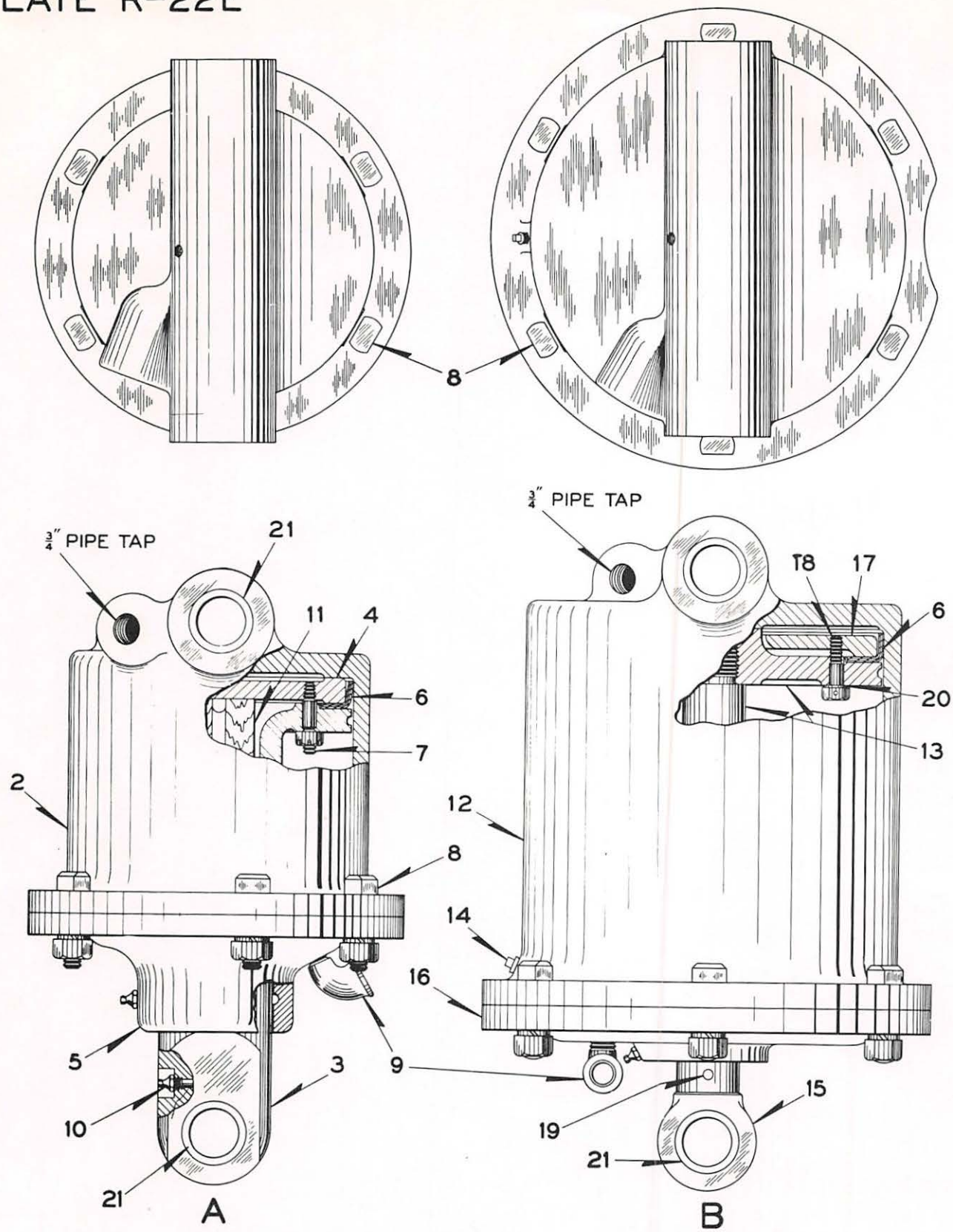

CYLINDERS FOR
MODEL 31 CAR RETARDERS

UNION SWITCH & SIGNAL CO.

MODEL "31" E.P. CAR RETARDER

DETAIL PARTS

CYLINDERS

Order by Plate, Piece, Reference and Abbreviated Description Given in Heavy Face Type Only

PIECE	REF.	DESCRIPTION	DWG. REF.
194394	A	END CYLINDER COMPLETE, 9-1/2" Diameter (6" Stroke) for Model "31" Car Retarder	C-9418-5
194451	Aa	INTERMEDIATE CYLINDER COMPLETE, 12" Diameter (6" Stroke) for Model "31" Car Retarder	C-9418-6
188169	B	INTERMEDIATE CYLINDER COMPLETE, 12" Diameter (7-1/2" Stroke) with 1/8" Pipe Plug in Cylinder Body and 1/2" M.I.Galv.Street Ell in Cylinder Head for Model "31" Car Retarder	C-9418-3
188171	Ba	END CYLINDER COMPLETE, 9-1/2" Diameter (7-1/2" Stroke) with 1/2" Pipe Plug in Cylinder Head and 1/8" Galv.M.I.Street Ell in Cylinder Body for Model "31" Car Retarder	C-9418-4
194395	2	CYLINDER BODY with Bushings Ref.21 for Ref.A	C-9417-13
194456	2a	CYLINDER BODY with Bushings Ref.21 for Ref.Aa	C-9417-11
194358	3	PISTON BODY with Bushing Ref.21 for Ref.A	C-9417-12
194450	3a	PISTON BODY with Bushing Ref.21 for Ref.Aa	C-9417-16
194385	4	PISTON FOLLOWER for Ref.A	C-9417-14
189107	4a	PISTON FOLLOWER for Ref.Aa	C-9417-15
194386	5	CYLINDER HEAD for Ref.A	C-9417-14
194293	5a	CYLINDER HEAD for Ref.Aa	C-9417-15
	6	9-1/2" WABCO PISTON PACKING (W.A.B.Pce.No.94039 Dwg.F-55026) for Refs.A and 13b	
	6a	12" WABCO PISTON PACKING (W.A.B.Pce.No.68580 Dwg.E-35922) for Refs.Aa and 13	
	7	STUD with Std.1/2"-13 C.P.Hex.Nut (Slotted 5/32" W. x 3/16"D.)	8115-234
194393	7a	STUD ONLY, for Ref.7	8115-234
207939	8	BOLT, 3/4" x 2-3/4" T-Head with 3/4" Hex.Nut and 3/4" Pl.S. Lock Washer (5/16" x 7/32") for Refs.A and Ba	8132-392
207990	8a	BOLT, 3/4" x 3" T-Head with 3/4" Hex.Nut and 3/4" Pl.S. Lock Washer (5/16" x 7/32") for Refs.Aa and B	8132-392
	9	STREET ELL, 1/2" M.I.Galv.	
	9a	STREET ELL, 1/8" M.I.Galv.	
	10	1/8" P.T. STRAIGHT ALEMITE HYDRAULIC FITTING	
194489	11	WOOD BLOCK	12443-384
183152	12	CYLINDER BODY with Bushings Ref.21 for Ref.B	C-9417-5

UNION SWITCH & SIGNAL CO.

PIECE	REF.	DESCRIPTION	DWG. REF.
183105	12a	CYLINDER BODY with Bushings Ref.21 for Ref.Ba.....	C-9417-1
188165	13	PISTON COMPLETE for Ref.B (Inc.1-13a, 1-15, 1-16, 1-17, 6-18, 1-6a, 1-19 and 6-20).....	C-9417-9
188164	13a	PISTON ONLY, for Ref.13.....	C-9417-9
188167	13b	PISTON COMPLETE for Ref.Ba (Inc.1-13c, 1-15, 1-16a, 1-17a, 4-18, 1-6, 1-19 and 4-20).....	C-9417-10
188166	13c	PISTON ONLY, for Ref.13b.....	C-9417-10
	14	1/8" C.I. PIPE PLUG	
	14a	1/2" C.I. PIPE PLUG	
185441	15	PISTON ROD BEARING with Bushing Ref.21.....	C-9417-8
185333	16	CYLINDER HEAD for Ref.13.....	C-9417-7
185332	16a	CYLINDER HEAD for Ref.13b.....	C-9417-2
175624	17	PISTON FOLLOWER for Ref.13.....	C-9417-2
183107	17a	PISTON FOLLOWER for Ref.13b.....	C-9417-2
175626	18	BOLT.....	8280-44
	19	TAPER PIN, NO.7 x 2" Steel	
	20	GASKET, 1/2" I.D. x 11/16" O.D. Circular closed type Copper Asbestos	
185339	21	BUSHING for Refs.2, 2a, 3, 3a, 12, 12a and 15.....	8092-92

PLATE R-22G

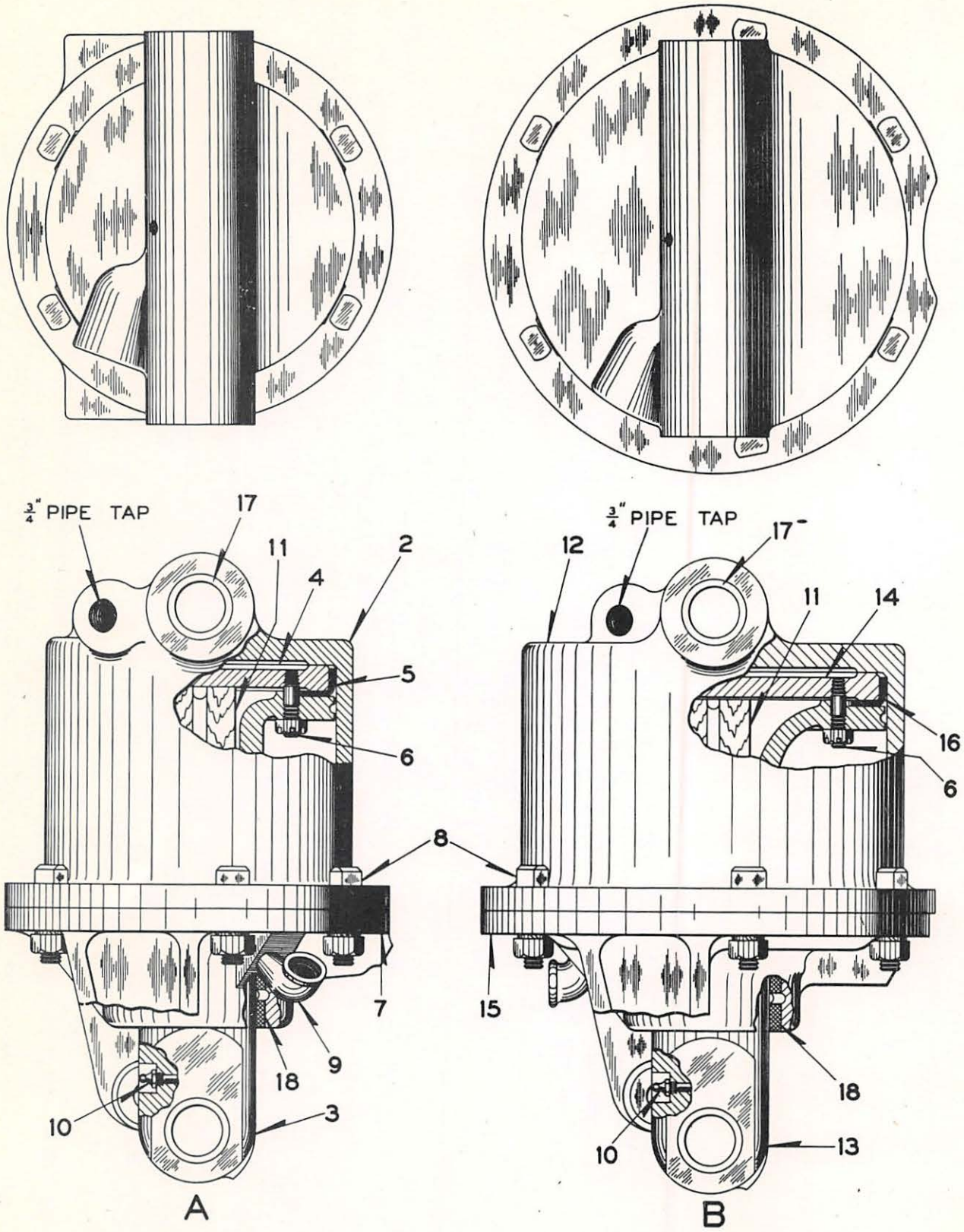

CYLINDERS FOR MODEL 31A CAR RETARDERS

UNION SWITCH & SIGNAL CO.

MODEL "31A" E.P. CAR RETARDER

DETAIL PARTS

CYLINDERS

Order by Plate, Piece, Reference and Abbreviated Description Given in Heavy Face Type Only

PIECE	REF.	DESCRIPTION	DWG. REF.
199796	A	END CYLINDER COMPLETE, 9-1/2" Diameter (6" Stroke) for Model "31A" Car Retarder	C-9418-8
199787	B	INTERMEDIATE CYLINDER COMPLETE, 12" Diameter (6" Stroke) for Model "31A" Car Retarder	C-9418-7
194395	2	CYLINDER BODY with Bushings Ref.17	C-9417-13
206643	3	PISTON BODY with Bushing Ref.17	C-9417-12
194385	4	PISTON FOLLOWER	C-9417-14
	5	9-1/2" WABCO PISTON PACKING (W.A.B. Pce.No.94039 Dwg.F-55026)	
	6	STUD with Std.1/2"-13 C.P.Hex.Nut (Slotted 5/32" W.x 3/16" D.)	8115-234
194393	6a	STUD ONLY, for Ref.6	8115-234
199795	7	CYLINDER HEAD with Bushing Ref.18	C-9417-18
207939	8	BOLT, 3/4" x 2-3/4" T-Head with 3/4" Hex.Nut and 3/4" Pl.S. Lock Washer (5/16" x 7/32")	8132-392
	9	STREET ELL, 1/2" M.I.Galv.	
	10	1/8" P.T. STRAIGHT ALEMITE HYDRAULIC FITTING	
194489	11	WOOD BLOCK	12443-384
194456	12	CYLINDER BODY with Bushings Ref.17	C-9417-11
206641	13	PISTON BODY with Bushing Ref.17	C-9417-16
189107	14	PISTON FOLLOWER	C-9417-15
199748	15	CYLINDER HEAD with Bushing Ref.18	C-9417-17
	16	12" WABCO PISTON PACKING (W.A.B. Pce.No.68580 Dwg.E-35922)	
185339	17	BUSHING for Refs.2, 3, 12 and 13	8092-92
189164	18	BUSHING for Refs.7 and 15	8092-120

PLATE R-34A

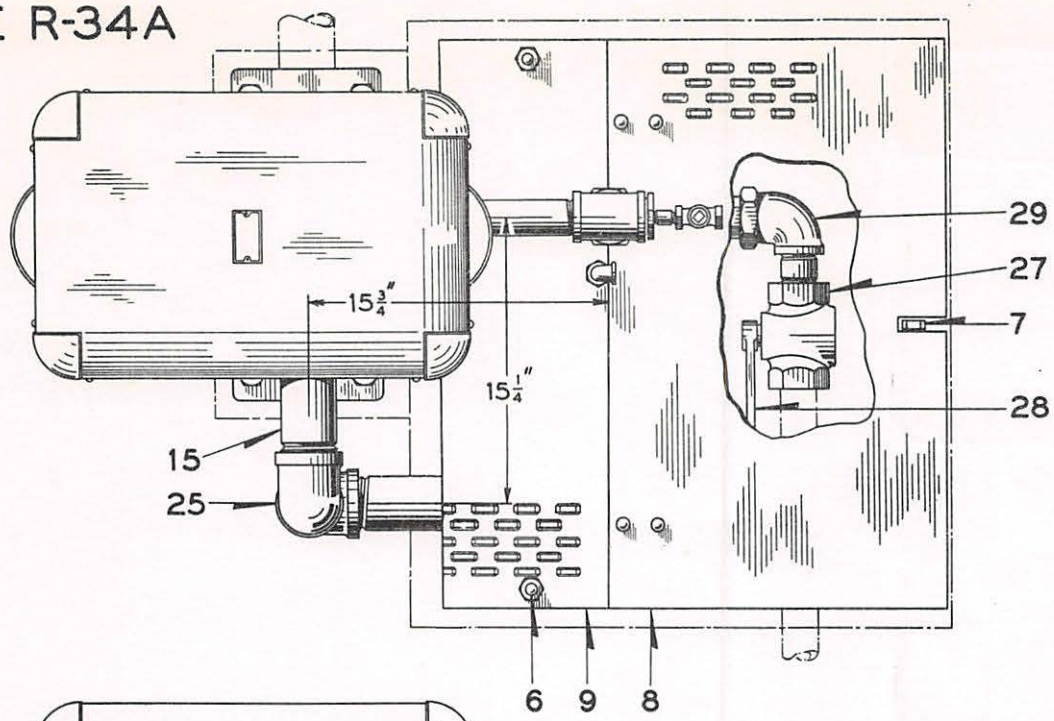

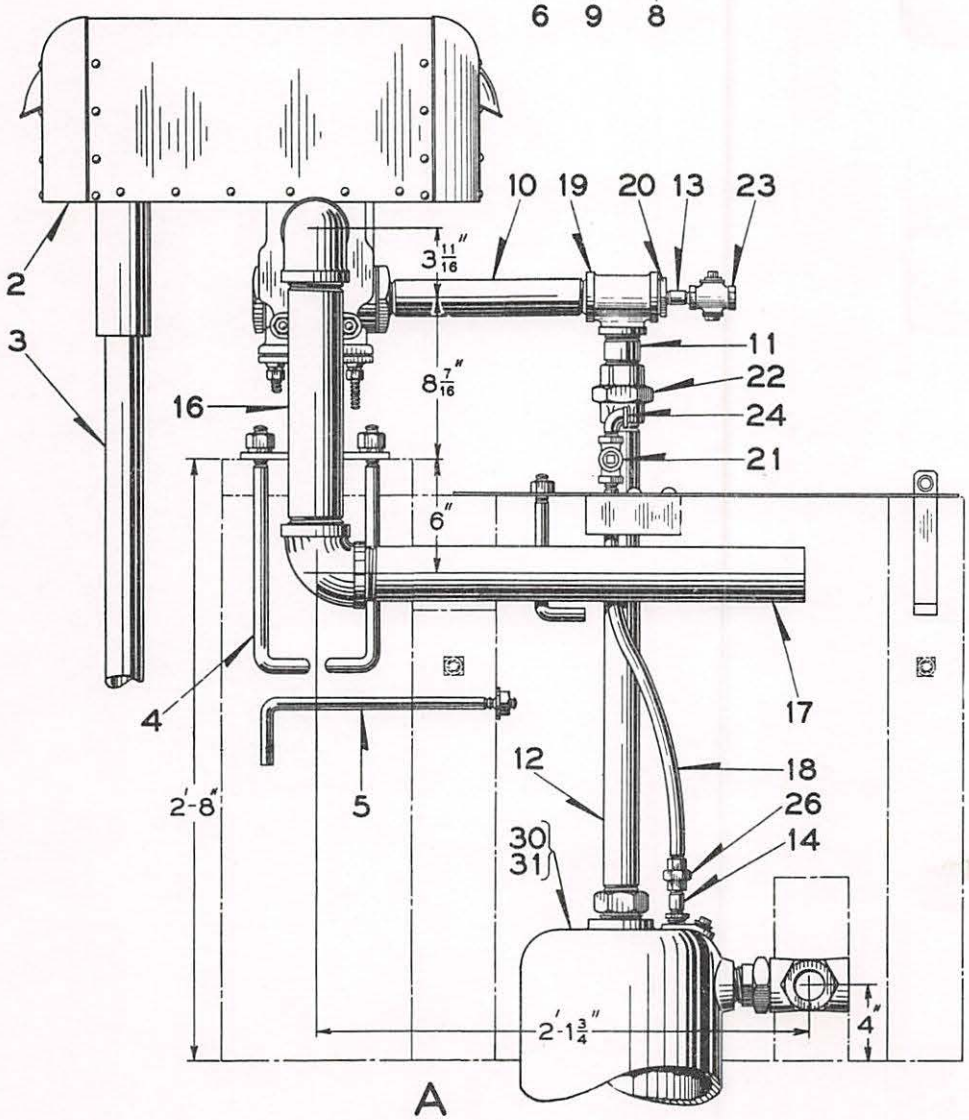

A

CONTROL VALVE LAYOUT

2-25-38

UNION SWITCH & SIGNAL CO.

MODELS "31" AND "31A" CAR RETARDERS

DETAIL PARTS

CONTROL VALVE LAYOUT

Order by Plate, Piece, Reference and Abbreviated Description Given in Heavy Face Type Only

PIECE	REF.	DESCRIPTION	DWG. REF.
188627	A	CAR RETARDER CONTROL VALVE 130-Ohms Complete with Piping, Wire Conduit Ref.3, Foundation Bolts and Cover.....	D-2342-3
211238	Aa	CAR RETARDER CONTROL VALVE 130-Ohms Complete with Piping, Foundation Bolts and Cover (Without Rectifier and Wire Conduit Ref.3).....	D-2342-3
182391	2	VALVE COMPLETE 130-Ohms with Cover, Rectifier, Base and Mounting Brackets (Without Foundation Bolts and Piping)(When ordering refer to Ref.Aa, Plate R-35A).....	D-2342-2
211226	2a	VALVE COMPLETE 130-Ohms with Cover, Base and Mounting Brackets (Without Foundation Bolts, Piping and Rectifier)(When ordering refer to Ref.Ba, Plate R-35A).....	D-2342-3
185953	3	WIRE CONDUIT 1-1/2" x 2'-0".....	B-10920-6
78051	4	FOUNDATION BOLT, 3/4" x 12" with 3/4" Pl.S.Lock Washer (5/16" x 7/32") (Cad.Pl.) and 3/4" Std.Hex.Nut (Cad.Pl.double thickness).....	7913-311
63351	5	FOUNDATION BOLT, 5/8" x 13" with 5/8" S.Plate Washer (Cad.Pl. double thickness) and 5/8"-11 Std.Hex.Nut (Cad.Pl. double thickness).....	7913-272
65318	6	FOUNDATION BOLT, 5/8" x 7" with 5/8"-11 Std.Hex.Nut (Cad.Pl. double thickness).....	7913-273
188568	7	STAPLE.....	8191-153
188588	8	COVER PLATE COMPLETE.....	C-9062-11
188589	9	COVER PLATE.....	C-9062-11
207094	10	PIPE 1-1/2" x 11-1/2".....	B-10919-4
154686	11	1-1/2" PIPE NIPPLE 3" LONG.....	B-10375-2
188631	12	PIPE 1-1/2" x 2'-2-1/4".....	B-10919-4
90641	13	PIPE NIPPLE, 1/2" x 2".....	B-10375-1
128638	14	3/8" PIPE NIPPLE 2" LONG.....	B-10375-2
188632	15	PIPE 2-1/2" x 8".....	B-10919-4
188633	16	PIPE 2-1/2" x 14-7/8".....	B-10919-4
187618	17	PIPE 2-1/2" x 2'-0".....	B-10925-2
188650	18	PIPE 3/8" x 20-3/4".....	C-9062-11
	19	1-1/2" GALV.EXTRA HEAVY M.I.TEE	
	20	1-1/2" to 1/2" STD.GALV.REDUCING BUSHING	

UNION SWITCH & SIGNAL CO.

PIECE	REF.	DESCRIPTION	DWG. REF.
	21	3/8" EXTRA HEAVY HARD METAL COCK	
	22	1-1/2" STD.M.I.GALV.R.R.UNION (Brass to Iron Seat) (W.A.B.Co. Pce.No.59644)	
	23	1/2" EXTRA HEAVY HARD METAL COCK	
	24	3/8" STD.GALV.M.I.BEADED STREET ELL	
	25	2-1/2" STD.GALV.M.I.ELL	
	26	3/8" STD.GALV.M.I.RAILROAD UNION (Brass to Iron Seat)(W.A.B.Co. Pce.No.54204)	
	27	1-1/2" CUTOUT COCK without Handle (W.A.B.Co. Pce.No.85494)	
	28	HANDLE for 1-1/2" W.A.B.Co.Cutout Cock (W.A.B.Co.Pce.No.18407)	
	29	1-1/2" GALV.M.I.MALE AND FEMALE RAILROAD UNION ELBOW(Brass to Iron Seat)	
138398	30	AUXILIARY RESERVOIR COMPLETE.....	C-4047-13
138581	31	AIR STRAINER COMPLETE for Ref.30.....	B-10656-14

2-25-38

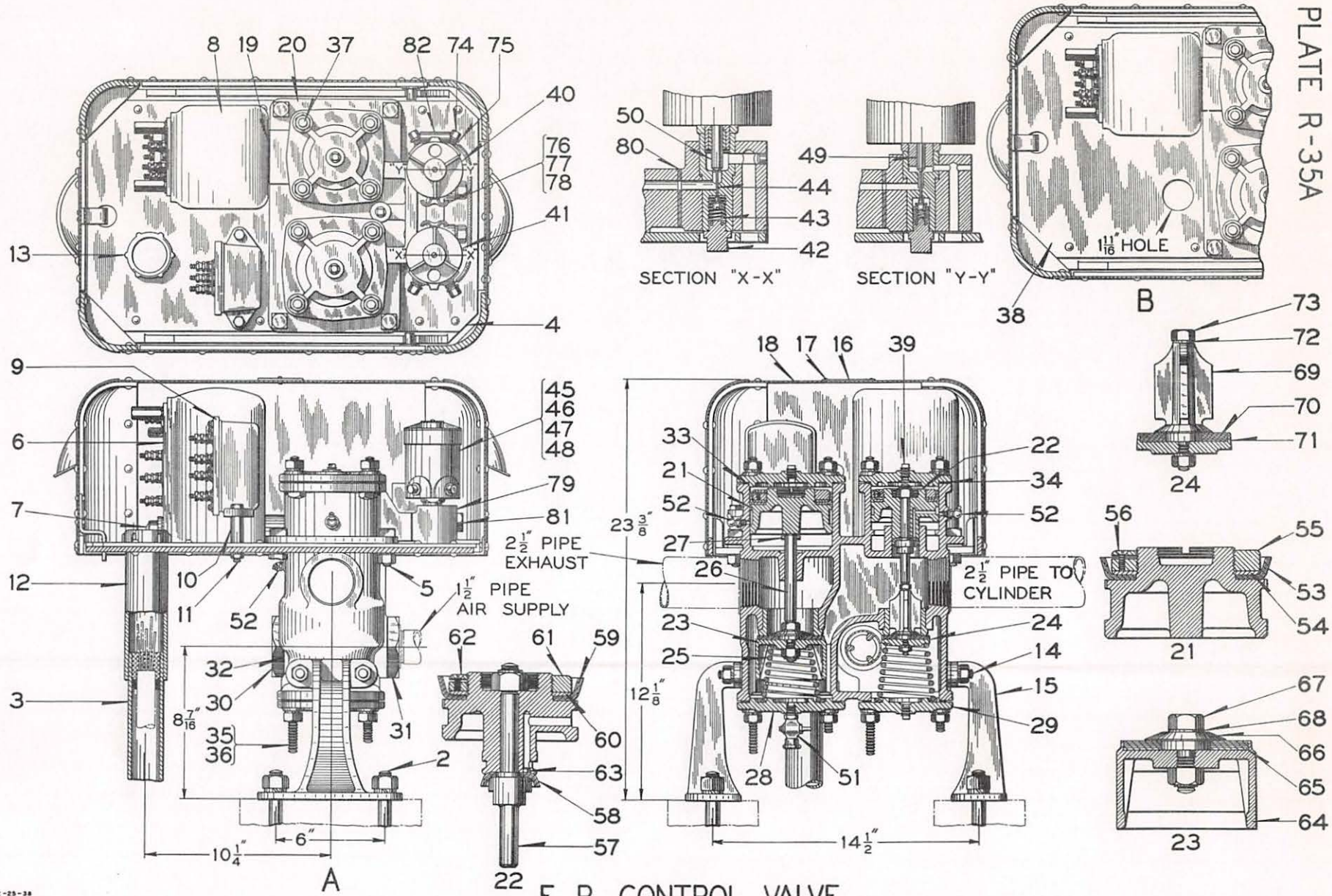

E. P. CONTROL VALVE

2-25-38

UNION SWITCH & SIGNAL CO.

MODELS "31" AND "31A" E.P. CAR RETARDERS

DETAIL PARTS

E.P. CONTROL VALVE

For layout refer to Plate R-34A

Order by Plate, Piece, Reference and Abbreviated Description Given in Heavy Face Type Only

PIECE	REF.	DESCRIPTION	DWG. REF.
185943	A	CONTROL VALVE COMPLETE with 130-ohm Magnets, Control Valve Ref.Aa, Conduit Pipe and Foundation Bolts.....	D-2342-2
182391	Aa	CONTROL VALVE COMPLETE with 130-ohm Magnets, Control Valve Ref.Ab, Rectifier Ref.9, Cover, Base Ref.4 and Mounting Brackets (Without Conduit Pipe and Foundation Bolts).....	D-2342-2
185942	Ab	CONTROL VALVE COMPLETE with 130-ohm Magnets (Without Base or Auxiliary Units) for Refs.Aa, Af and Ba.....	D-2342-2
222980	Ac	CONTROL VALVE COMPLETE with 130-ohm Magnets, Control Valve Ref.Ad, Conduit Pipe and Foundation Bolts.....	D-2342-2
222979	Ad	CONTROL VALVE COMPLETE with 130-ohm Magnets, Control Valve Ref.Ae, Rectifier Ref.9, Cover, Base Ref.4 and Mounting Brackets (Without Conduit Pipe and Foundation Bolts).....	D-2342-2
222978	Ae	CONTROL VALVE COMPLETE with 130-ohm Magnets with Solid Magnet Caps. (Without Base or Auxiliary Units).....	D-2342-2
235164	Af	CONTROL VALVE COMPLETE with 130-ohm Magnets, Control Valve Ref.Ab, Cover, Base Ref.4a, and Mounting Brackets (Without Rectifier Ref.9, Conduit Pipe and Foundation Bolts).....	D-2342-2
211227	B	CONTROL VALVE COMPLETE with 130-ohm Magnets, Control Valve Ref.Ba and Foundation Bolts (Arranged for 1-1/4" Bushing).....	D-2342-2
211226	Ba	CONTROL VALVE COMPLETE with 130-ohm Magnets, Control Valve Ref.Ab, Cover, Base Ref.38 and Mounting Brackets (Without Rectifier Ref.9, Pipe Ref.12, Bushing Ref.13, Conduit Pipe Ref.3 and Foundation Bolts Ref.2).....	D-2342-2
78051	2	FOUNDATION BOLT, 3/4" x 12" with 3/4" Plain S.Lock Washer (Ex.H.) (Cad.Pl.) and 3/4" Hex.Nut (Cad.Pl. double thickness).....	7913-311
185953	3	CONDUIT PIPE, 1-1/2" x 2'-0".....	B-10920-6
185876	4	BASE COMPLETE (Arranged for 2" Conduit Pipe and Rectifier) for Ref. Aa and Ad.....	C-9062-10
235163	4a	BASE COMPLETE (Arranged for 2" Conduit Pipe) (Not arranged for Rectifier) for Ref.Af.....	C-9062-10
	5	BOLT, 1/2"-13 x 1-3/4" Sq.Hd.S. (Cad.Pl.double thickness) with 1/2" Std. Hex.Nut (Cad.Pl.double thickness) and 1/2" Plain S.Lock Washer (Ex.H.) (Cad.Pl.)	
188441	6	PRESSURE REGULATOR COMPLETE (For details refer to Plate R-47A).	C-9071-4

UNION SWITCH & SIGNAL CO.

PIECE	REF.	DESCRIPTION	DWG. REF.
	7	STUD, 1/2" x 7-5/16" with 1/2" Hex.Nut (Cad.Pl.double thickness).....	8115-231
185877	7a	STUD ONLY, 1/2" x 7-5/16".....	8115-231
188395	8	PRESSURE REGULATOR COVER.....	C-9076-6
176646	9	RECTIFIER COMPLETE.....	B-12632-7
185859	10	SPACER.....	B-10333-1
	11	BOLT, 3/8"-16 x 3" Hex.Hd.S. (Cad.Pl.double thickness) with 3/8" Plain S.Lock Washer (Ex.H.) (Cad.Pl.) and 3/8"-16 Hex.Jam Nut (Cad.Pl. double thickness)	
41208	12	PIPE, 2" x 8".....	B-10925-1
	13	2" GALV.M.I.CONDUIT BUSHING	
	14	STUD, 1/2" x 1-7/8" with 1/2" Plain S.Lock Washer (Ex.H.) (Cad.Pl. double thickness) and 1/2" Hex.Nut(Cad.Pl.double thickness).....	8115-231
185800	14a	STUD ONLY, 1/2" x 1-7/8".....	8115-231
185907	15	MOUNTING BRACKET.....	C-9062-7
196959	16	NAME PLATE.....	8225-485
	17	NO.6 x 1/2" RD.HD.SCREW (C.P.)	
185894	18	MAIN COVER COMPLETE.....	C-9062-6
189029	19	PRESSURE REGULATOR GASKET.....	8078-1569
243770	20	TWO PIECE VALVE BODY COMPLETE (Inc.1-20a, 1-79, 1-80 and 2-81)	D-2340-2
185770	20a	VALVE BODY COMPLETE without detachable body Ref.79.....	D-2340-2
185830	21	SHIFTING PISTON COMPLETE.....	8328-140
185776	21a	SHIFTING PISTON ONLY.....	8328-138
185813	22	SHIFTING PISTON COMPLETE.....	8328-139
185775	22a	SHIFTING PISTON ONLY.....	8328-137
185867	23	EXHAUST VALVE COMPLETE.....	C-9062-2
185838	24	INLET VALVE COMPLETE.....	C-9062-2
186066	25	VALVE SPRING.....	8124-254
185809	26	VALVE TAPPET COMPLETE with Pin Ref.27.....	12501-95
185795	27	PIN, No.8 x 1" for Ref.26.....	8097-466
185909	28	CYLINDER HEAD.....	C-9062-8
185910	29	CYLINDER HEAD.....	C-9062-8
185784	30	STRAINER COMPLETE.....	B-10656-19
185829	31	STRAINER PLUG.....	9511-127

UNION SWITCH & SIGNAL CO.

PIECE	REF.	DESCRIPTION	DWG. REF.
185782	32	GASKET	8078-1496
185780	33	GASKET	8078-1496
185781	34	GASKET	8078-1496
	35	STUD, 1/2" x 2-1/2" with 1/2" Plain S.Lock Washer (Ex.H.) (Cad.Pl.) and 1/2" Hex.Nut (Cad.Pl.double thickness)	8115-231
185801	35a	STUD ONLY, 1/2" x 2-1/2"	8115-231
	36	STUD, 1/2" x 3-5/8" with 1/2" Plain S.Lock Washer (Ex.H.) (Cad.Pl.) and 1/2" Hex.Nut (Cad.Pl.double thickness)	8115-231
188613	36a	STUD ONLY, 1/2" x 3-5/8"	8115-231
	37	BOLT, 1/2" x 1-7/8" with 1/2" Plain S.Lock Washer (Ex.H.) (Cad.Pl.) and 1/2" Hex.Nut (Cad.Pl.double thickness)	8280-6
2419	37a	BOLT ONLY, 1/2" x 1-7/8"	8280-6
211224	38	BASE COMPLETE (Arranged for 1-1/4" Bushing) (Not arranged for Rectifier mounting) for Ref.Ba	C-9062-10
	39	PIPE PLUG, 1/4" Std.	
73385	40	MAGNET COMPLETE 130-ohms (Without Cap, Armature, Armature Stem and Spring) (See Ref.41a and 41b for magnet assembly)	8342-159
185851	41	MAGNET COMPLETE 130-ohms (Without Cap, Armature, Armature Stem and Spring) (See Ref.41a and 41b for magnet assembly)	8342-168
241604	41a	MAGNET VALVE ASSEMBLY 130-ohms Complete (Includes 1-79, 1-40, 1-41, 2-42, 2-43, 2-44, 2-45, 2-46, 2-47, 2-48, 1-49 and 1-50)	A-2583-15
241605	41b	MAGNET VALVE ASSEMBLY 130-ohms Complete (Includes 1-79, 1-40, 1-41, 2-42, 2-43, 2-44, 2-45a, 2-46, 2-47, 2-48, 1-49 and 1-50)	A-2583-15
6369	42	SPRING RETAINER	9511-33
3102	43	SPRING	7625-5
3100	44	PIN VALVE	7625-15
75967	45	MAGNET CAP (Two Piece with Finger Holes) for Refs.40 and 41	C-1992-9
79249	45a	SOLID MAGNET CAP for Refs.40 and 41	C-1992-9
1707	46	ARMATURE for Refs.40 and 41	8157-27
64642	47	RELEASING SPRING for Refs.40 and 41	8735-478
1509	48	NUT for Refs.40 and 41	8109-15
1711	49	ARMATURE STEM for Ref.40	B-9595-1
185852	50	ARMATURE STEM for Ref.41	9595-92
	51	1/4" MALE AND FEMALE BRONZE AIR COCK with Tee Handle (N.P.)	
	52	LUBRICATING FITTING, 1/8" P.T., 67-1/2°	
187540	53	PISTON PACKING	12613-10

UNION SWITCH & SIGNAL CO.

PIECE	REF.	DESCRIPTION	DWG. REF.
185832	54	WASHER	8332-87
185820	55	NUT	8265-308
	56	MACHINE SCREW, No.10-30 x 1/2" Flat Hd.S. (Cad.Pl.)	
	57	VALVE TAPPET with 1/2"-13 Retainer Nut	12501-94
185810	57a	VALVE TAPPET ONLY	12501-94
249721	58	PISTON PACKING	12613-11
187511	59	PISTON PACKING	12613-8
185831	60	WASHER	8332-87
185819	61	NUT	8265-307
	62	MACHINE SCREW, No.10-30 x 3/8" Flat Hd.S. (Cad.Pl.)	
188454	63	PLUG	9511-130
185796	64	VALVE CAGE	8092-96
103473	65	PACKING	8078-1657
185850	66	PACKING RETAINER	8327-48
	67	BOLT, 1/2" x 1-3/4" with 1/2"-13 Retainer Nut	8380-181
185805	67a	BOLT ONLY, 1/2" x 1-3/4"	8280-181
132737	68	INS. WASHER	8078-1392
185837	69	VALVE STEM	C-9062-2
103472	70	PACKING	8078-1657
185839	71	VALVE PACKING CAGE	8092-97
116719	72	WASHER	8078-1352
	73	BOLT, 5/16" x 3-5/8" with 5/16"-16 Steel Hex.Nut (Cad.Pl.) and 5/16" Plain S.Lock Washer (Ex.H.) (Cad.Pl.)	8099-223
185804	73a	BOLT ONLY, 5/16" x 3-5/8"	8099-223
154945	74	TERMINAL POST	8094-2226
821	75	WASHER	7828-4
90027	76	WIRE GUIDE	11078-4
	77	MACHINE SCREW, No.8-36 x 5/8" Rd.Hd.S. (Tin Pl.) for attaching Wire Guide to Magnet	
662	78	WASHER (marked "OHMS")	7828-15
241603	79	DETACHABLE VALVE BODY COMPLETE	C-9062-19
241607	80	GASKET	8078-1738

UNION SWITCH & SIGNAL CO.

PIECE	REF.	DESCRIPTION	DWG. REF.
	81	MACHINE BOLT 1/2"-13 x 3" Hex.Hd.S. (Cad.Pl.double thickness) with 1/2" Plain S.Lock Washer (Ex.H.) (Cad.Pl.)	
248174	82	CONDENSER COMPLETE (16 MFD.).....	B-12549-66

PLATE R-47A

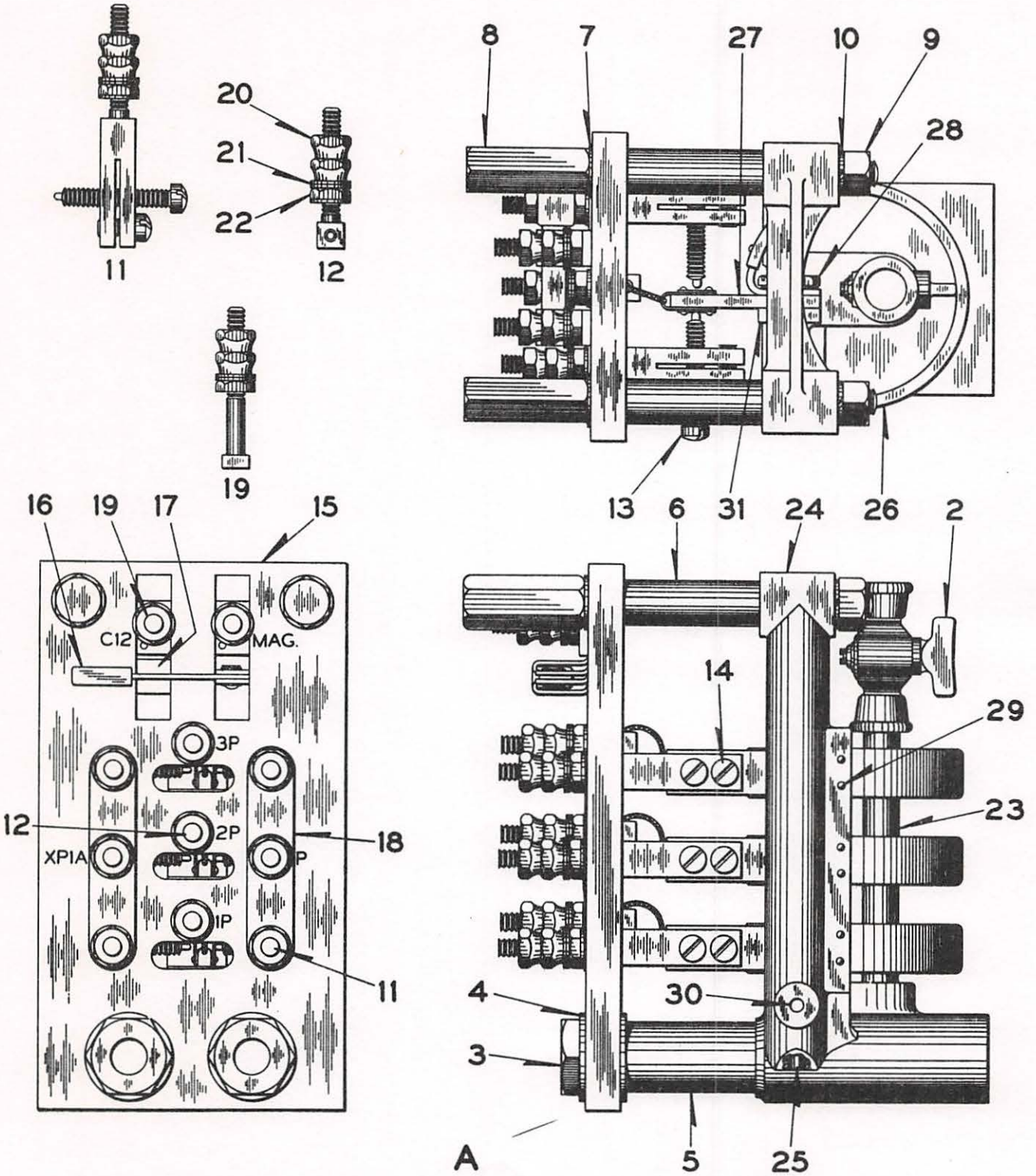

PRESSURE REGULATOR

UNION SWITCH & SIGNAL CO.

MODELS "31" AND "31A" E.P. CAR RETARDERS

DETAIL PARTS

PRESSURE REGULATOR FOR E.P. CONTROL VALVE

Order by Plate, Piece, Reference and Abbreviated Description Given in Heavy Face Type Only

PIECE	REF.	DESCRIPTION	DWG. REF.
188441	A	PRESSURE REGULATOR COMPLETE with Terminal Board	C-9071-4
188326	Aa	PRESSURE REGULATOR COMPLETE without Terminal Board	C-9076-4
	2	1/4" AIR COCK WITH FEMALE ENDS AND TEE HANDLE (N.P.)	
188437	3	SEPARATOR	8072-783
25073	4	WASHER	7826-28
187986	5	SPACER	8072-702
188425	6	STUD	8071-185
62222	7	WASHER	7826-180
188374	8	GUARD NUT	8265-314
	9	HEX.NUT, 3/8"-16 Std. (Cad.Pl.)	
	10	LOCK WASHER, 3/8" Std.Pl.S. (5/32" x 1/16") (Cad.Pl.)	
	11	TERMINAL POST COMPLETE with Nuts, Washers and Screws (Inc. 1-11a, 1-13, 1-14, 2-20, 3-21 and 1-22)	12451-
188341	11a	TERMINAL POST ONLY, for Ref.11	8094-975
	12	TERMINAL POST COMPLETE with Nuts and Washers (Inc.1-12a, 2-20, 3-21 and 1-22)	12451-
188364	12a	TERMINAL POST ONLY, for Ref.12	8094-976
188416	13	CONTACT SCREW with Tip	8094-2132
	14	MACHINE SCREW, NO.14-24 x 1/2" Fil.Hd.Br. (N.P.)	
188312	15	TERMINAL BOARD	C-9076-5
188397	16	SWITCH KNIFE BLADE COMPLETE	8429-227
188422	17	SWITCH KNIFE CONTACT COMPLETE	8385-2406
175045	18	CONNECTOR	8064-728
	19	TERMINAL POST COMPLETE with Nuts and Washers (Inc.1-19a, 2-20, 2-21 and 1-22)	12451-
160475	19a	TERMINAL POST ONLY, for Ref.19	8094-2207
29101	20	NUT	8109-193
29102	21	WASHER	7828-139
29103	22	NUT	8109-194
158335	23	NIPPLE	B-10375-3

UNION SWITCH & SIGNAL CO.

PIECE	REF.	DESCRIPTION	DWG. REF.
188325	24	REGULATOR BODY	C-9076-4
185797	25	PLUG	9511-126
188363	26	TUBE COMPLETE	8161-145
188336	27	CONTACT FINGER COMPLETE	8429-226
	28	SCREW with No.8 Pl.S.Lock Washer (1/16" x 3/64") (Cad.Pl.)	8098-500
89223	28a	SCREW ONLY, for Ref.28	8098-500
54928	29	RIVET	10301-21
74772	30	PLUG	9511-50
188366	31	CLAMPING PLATE	12538-134

2-25-38

PLATE R-51

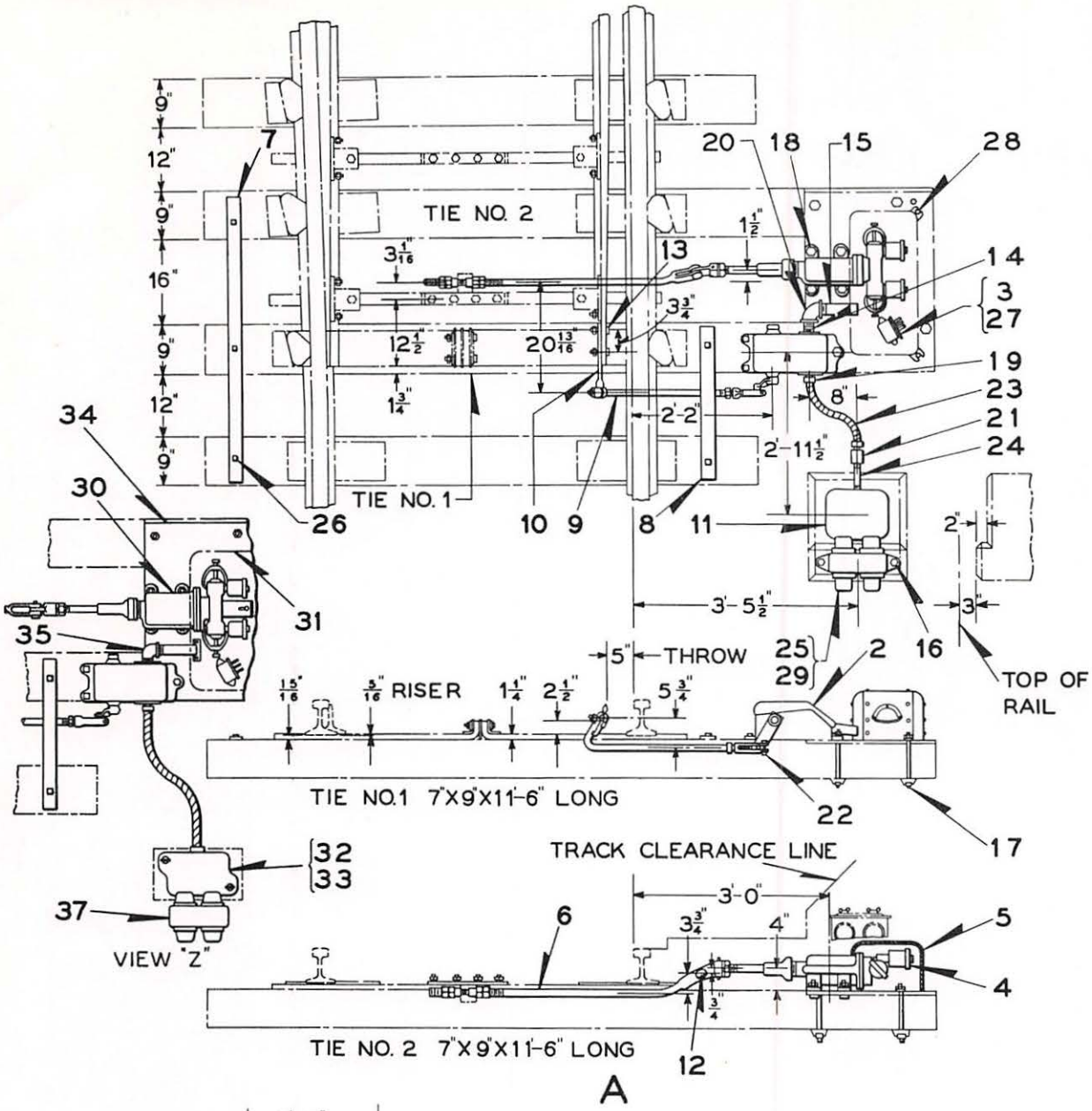

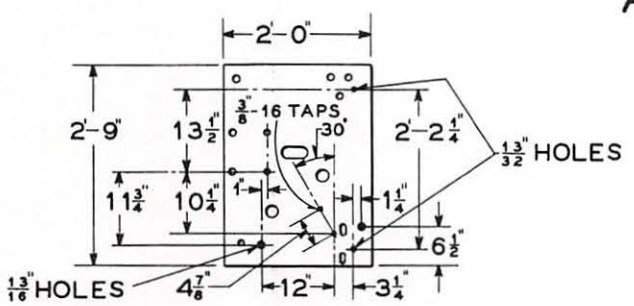

HOLES MARKED THUS • ARE TO BE DRILLED IN EXISTING PLATE.

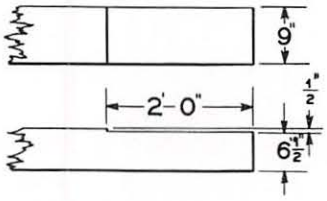

NOTCHING FOR TIES NO.1 AND 2

SINGLE SWITCH LAYOUT WITH D. A. CYL. & VALVE

2-25-38 4-12-45

UNION SWITCH & SIGNAL CO.

MODEL "31A" CAR RETARDER

SINGLE SWITCH LAYOUT WITH DIRECT ACTING CYLINDER, VALVE AND CIRCUIT CONTROLLER

(P. R. R.)

Order by Plate, Piece, Reference and Abbreviated Description Given in Heavy Face Type Only

PIECE	REF.	DESCRIPTION	DWG. REF.
209675	A	R.H. INSULATED SINGLE SWITCH LAYOUT with 4 in. x 6 in. Direct Acting Cylinder, Valve (400-ohms D.C. Magnets), Color Light Switch Lamp and Universal Switch Circuit Controller	C-5075-24
209676	Aa	L.H. INSULATED SINGLE SWITCH LAYOUT with 4 in. x 6 in. Direct Acting Cylinder, Valve (400-ohms D.C. Magnets), Color Light Switch Lamp and Universal Switch Circuit Controller	C-5075-24
213869	Ab	R.H. INSULATED SINGLE SWITCH LAYOUT with 5 in. x 6 in. Direct Acting Cylinder, Valve (400-ohms D.C. Magnets), Color Light Switch Lamp and Universal Switch Circuit Controller (Per View "Z")	C-5075-24
213870	Ac	L.H. INSULATED SINGLE SWITCH LAYOUT with 5 in. x 6 in. Direct Acting Cylinder, Valve (400-ohms D.C. Magnets), Color Light Switch Lamp and Universal Switch Circuit Controller (Per View "Z")	C-5075-24
209313	2	"U-5" SWITCH CIRCUIT CONTROLLER 4-Way, 2 and 3 Position (4 Front and 4 Back Contacts) with 3/4 in. Offset Crank with insulated Ball Stud, Ref. 4, Plate J-1047 (For details refer to Plate J-1048)	D-1576-32
176646	3	STYLE RM-21 RECTIFIER COMPLETE	B-12632-7
131831	4	4 in. x 6 in. DIRECT ACTING SWITCH CYLINDER (When ordering refer to Plate R-65)	C-3668-15
207108	5	R.H. CYLINDER COVER COMPLETE	C-2065-34
207109	5a	L.H. CYLINDER COVER COMPLETE	C-2065-34
209506	6	SWITCH OPERATING ROD, 4 in. x 2-1/2 in. with Sleeves, Hex.Nuts and Pin Ref.12 (Without Switch Adjusting Bracket)	B-9801-94
78059	7	TIE STRAP, 4 ft.-5 in.	B-9613-19
81541	8	TIE STRAP, 2 ft.-5 in.	B-9613-21
209508	9	CIRCUIT CONTROLLER OPERATING ROD COMPLETE, 2 ft.-4-1/4 in.	B-10287-86
209509	10	SWITCH LUG	B-8060-48
171526	11	JUNCTION BOX (When ordering refer to Plate R-119)(For Layout of Junction Box refer to Plate R-152)	C-9180-16
22589	12	PIN, 7/8 in. x 2-1/4 in. with 3/16 in. x 1-1/2 in. S.Cotter	B-10338-1
	13	BOLT, 3/4 in. x 3-1/4 in. Sq.Hd. with 3/4 in. Hex.Nut and 3/4 in. Pl.S. Lock Washer (5/16 in. x 7/32 in.)	

UNION SWITCH & SIGNAL CO.

PIECE	REF.	DESCRIPTION	DWG. REF.
210653	14	PIPE NIPPLE	B-10375-2
177840	15	PIPE NIPPLE	B-10925-2
123057	16	FOUNDATION BOLT, 5/8 in. x 10 in. with 5/8 in. Hex.Nut and 5/8 in. Plate Washer	7913-310
39868	17	STUD BOLT, 3/4 in. x 11 in. with 3/4 in. Hex.Nut, 3/4 in. Pl.S.Lock Washer (5/16 in. x 7/32 in.), 3/4 in. Sq.Nut and Washer Ref.17a	8261-126
199406	17a	C.I. WASHER	8065-206
	18	BOLT, 3/4 in. x 2-1/2 in. Sq.Hd. with 3/4 in. Hex.Nut and 3/4 in. Pl.S. Lock Washer (5/16 in. x 7/32 in.)	
	19	STRAIGHT BOX CONNECTOR, 1-1/2 in. M.I.Galv.	
	20	ELL, 1-1/2 M.I.Galv.	
	21	PIPE COUPLING, 1-1/2 in. M.I.Galv.	
22393	22	BOLT, 1/2 in. x 2-1/4 in. Sq.Hd. with 1/2 in. Hex.Nut (Slotted 5/32 in. W. x 3/16 in. D.), 1/8 in. x 1-1/4 in. S.Cotter and 1/2 in. Pl.S.Lock Washer (7/32 in. x 5/32 in.) (Cad.Pl.)	8280-35
	23	CONDUIT, 1-1/2 in. Non-metallic Flexible (Orders should specify length desired)	
171703	24	CONDUIT, 1-1/2 in. x 6 in.	B-12505-1
171704	25	ELL CONDUIT, 3/4 in. (Used between Switch Lamp and Junction Box)	B-12505-2
	26	LAG SCREW, 3/4 in. x 6 in. Galv.	
	27	TAP BOLT, 3/8 in.-16 x 1 in. with 3/8 in. Pl.S.Lock Washer (11/64 in. x 7/64 in.)	
1207	28	TAPER PIN	8059-1
160575	29	STYLE "ES-20" SWITCH LAMP (When ordering refer to Plate R-105) (For Layout of Switch Lamp refer to Plate R-152)	C-9139-8
213557	30	5 in. x 6 in. DIRECT ACTING SWITCH CYLINDER (When ordering refer to Plate R-66)	C-3668-24
213938	31	R.H. CYLINDER COVER COMPLETE	C-2065-34
213939	31a	L.H. CYLINDER COVER COMPLETE	C-2065-34
211732	32	14-WAY JUNCTION BOX COMPLETE (For details refer to Plate L-1251)	C-9180-19
211769	33	CABLE OUTLET COMPLETE. Used between Switch Lamp and Junction Box	B-10342-111
212956	34	BASE PLATE WITH BAFFLE PLATES	B-8325-151
	35	STREET ELL, 1-1/2 in. M.I.Galv.	
	36	TAP BOLT, 1/2 in. x 1-1/4 in. Hex.Hd.S. with 1/2 in. Pl.S.Lock Washer (7/32 in. x 5/32 in.) For attaching Ref.33 to Switch Lamp and Junction Box (Not shown)	
211825	37	STYLE "ES-20" SWITCH LAMP	C-9139-5

PLATE R-51 A

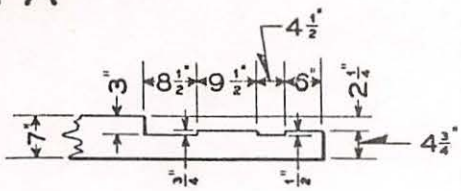

NOTCHING FOR TIES NO. 1 AND 2

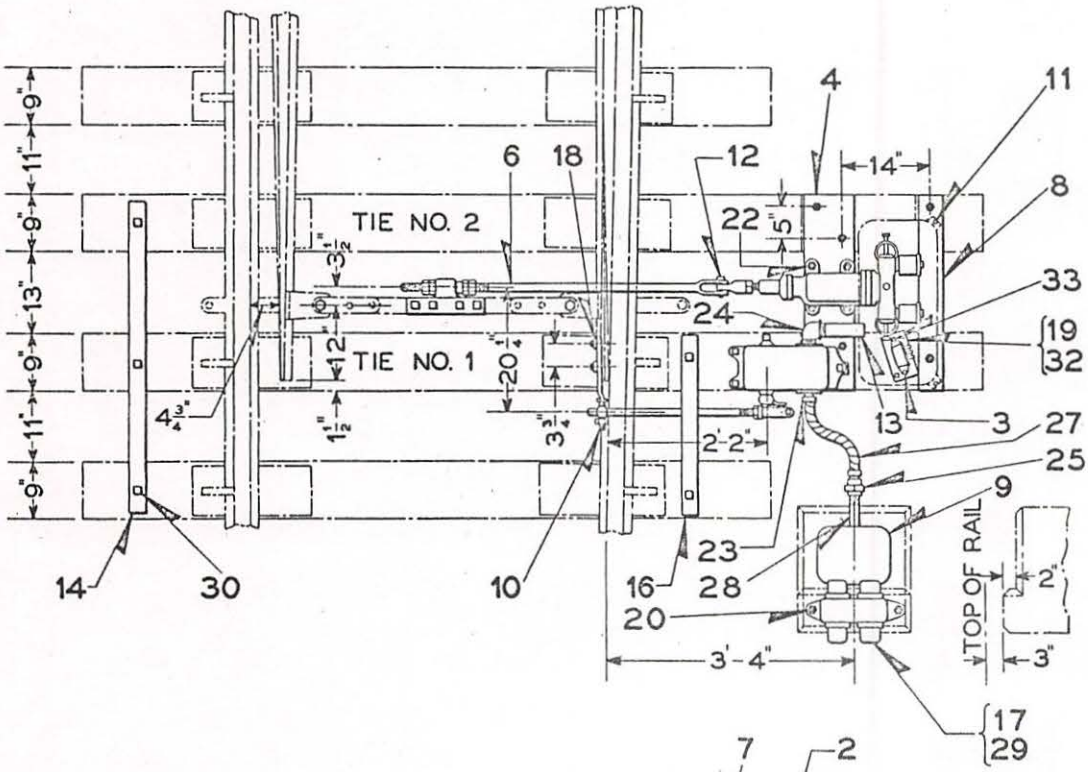

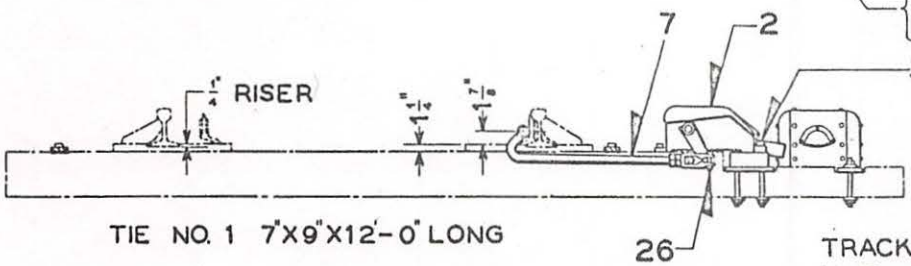

TIE NO. 1 7"X9"X12'-0" LONG

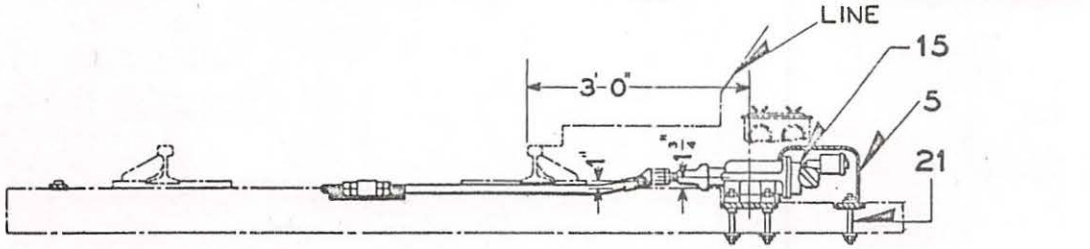

TIE NO. 2 7"X9"X12'-0" LONG

A

SINGLE SWITCH LAYOUT WITH D. A. CYL. & VALVE

2-25-38

UNION SWITCH & SIGNAL

MODEL "31" CAR RETARDER

SINGLE SWITCH LAYOUT WITH DIRECT ACTING CYLINDER, VALVE AND CIRCUIT CONTROLLER

(D.L.& W.R.R.)

Order by Plate, Piece, Reference and Abbreviated Description Given in Heavy Face Type Only

PIECE	REF.	DESCRIPTION	DWG. REF.
207110	A	R.H. INSULATED SINGLE SWITCH LAYOUT with 4" x 6" Direct Acting Cylinder, Valve (400-ohms D.C. Magnets), Color Light Switch Lamp and Universal Switch Circuit Controller.....	C-5075-21
207111	Aa	L.H. INSULATED SINGLE SWITCH LAYOUT with 4" x 6" Direct Acting Cylinder, Valve (400-ohms D.C. Magnets), Color Light Switch Lamp and Universal Switch Circuit Controller.....	C-5075-21
207228	2	"U-5" SWITCH CIRCUIT CONTROLLER 4-Way, 2 and 3 Position (4 Front and 4 Back Contacts) with 3/4" Offset Crank with non-insulated Ball Stud, Ref.3 Plate J-1047 (For details refer to Plate J-1048).....	D-1576-32
176646	3	STYLE RM-21 RECTIFIER COMPLETE.....	B-12632-7
207123	4	BASE PLATE, 3/4" x 8" x 2'-7".....	B-8325-149
207108	5	R.H. CYLINDER COVER COMPLETE.....	C-2065-34
207109	5a	L.H. CYLINDER COVER COMPLETE.....	C-2065-34
207092	6	R.H. SWITCH OPERATING ROD, 4'-3" with Pin Ref.12.....	B-9801-95
207093	6a	L.H. SWITCH OPERATING ROD, 4'-3",with Pin Ref.12.....	B-9801-95
207107	7	CIRCUIT CONTROLLER OPERATING ROD, 2'-3 1/4".....	B-10287-74
207067	8	TIE STRAP, 2'-7".....	B-9613-42
171526	9	JUNCTION BOX (When ordering refer to Plate R-119)(For Layout of Junction Box refer to Plate R-152).....	C-9180-16
118571	10	SWITCH LUG with 1" Hex.Nut and 3/16" x 1-1/2" S.Cotter.....	B-8060-23
1207	11	DOWEL.....	8059-1
22589	12	PIN, 7/8" x 2-1/4" with 3/16" x 1-1/2" S.Cotter.....	B-10338-1
177840	13	PIPE NIPPLE.....	B-10925-2
127875	14	TIE STRAP, 4'-1".....	B-9613-26
99476	15	4" x 6" DIRECT ACTING SWITCH CYLINDER (When ordering refer to Plate R-65).....	C-3668-15
184072	16	TIE STRAP, 2'-5".....	B-9613-34
160575	17	SWITCH LAMP (When ordering refer to Plate R-105)(For Layout of Switch Lamp refer to Plate R-152).....	C-9139-8
86340	18	BOLT, 5/8" x 3-1/4" Sq.Hd. with 5/8" Hex.Nut and 5/8" Pl.S. Lock Washer (17/64" x 3/16").....	8277-100
207058	19	RECTIFIER MOUNTING PLATE.....	9S99-1313
123057	20	FOUNDATION BOLT, 5/8" x 10" with 5/8" Hex.Nut and 5/8" Plate Washer.....	7913-310

PLATE R-51 B

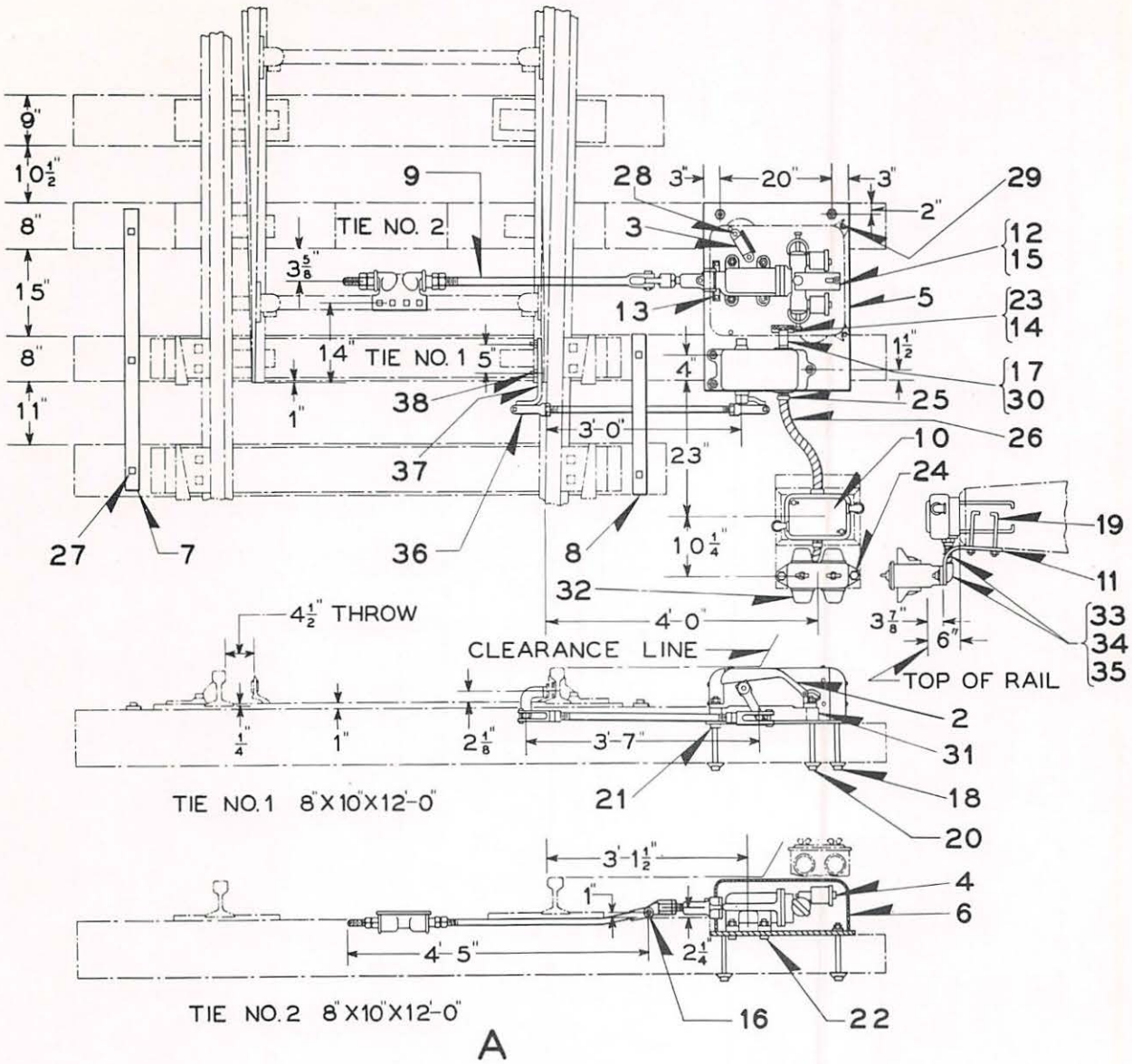

SINGLE SWITCH LAYOUT WITH D. A. CYL. & VALVE

2-25-38

UNION SWITCH & SIGNAL CO.

MODEL "31" CAR RETARDER

SINGLE SWITCH LAYOUT WITH DIRECT ACTING CYLINDER,
VALVE AND CIRCUIT CONTROLLER

(Belt Railway of Chicago)

Order by Plate, Piece, Reference and Abbreviated Description Given in Heavy Face Type Only

PIECE	REF.	DESCRIPTION	DWG. REF.
209080	A	R.H. INSULATED SINGLE SWITCH LAYOUT with 4" x 6" Direct Acting Cylinder, Valve (400-ohms D.C. Magnets), Color Light Switch Lamp and Universal Switch Circuit Controller.....	C-5075-23
209081	Aa	L.H. INSULATED SINGLE SWITCH LAYOUT with 4" x 6" Direct Acting Cylinder, Valve (400-ohms D.C. Magnets), Color Light Switch Lamp and Universal Switch Circuit Controller.....	C-5075-23
207228	2	"U-5" SWITCH CIRCUIT CONTROLLER 4-Way, 2 and 3 Position (4 Front and 4 Back Contacts) with 3/4" Offset Crank, with non-insulated Ball Stud, Ref.3 Plate J-1047 (For details refer to Plate J-1048).....	D-1576-32
176646	3	STYLE RM-21 RECTIFIER COMPLETE.....	B-12632-7
	4	4" x 6" DIRECT ACTING SWITCH CYLINDER (When ordering refer to Plate R-65).....	C-3668-15
209595	5	BASE PLATE, 1/2" x 2'-2" x 2'-9".....	B-8325-150
176487	6	R.H. CYLINDER COVER COMPLETE.....	C-2065-28
176488	6a	L.H. CYLINDER COVER COMPLETE.....	C-2065-36
127875	7	TIE STRAP, 4'-1".....	B-9613-26
184072	8	TIE STRAP, 2'-5".....	B-9613-34
	9	SWITCH OPERATING ROD with Weatherproof Switch Adjusting Bracket and Pin Ref.16.....	B-9801-
210691	10	JUNCTION BOX (When ordering refer to Plate R-113).....	C-9180-6
102836	11	SWITCH LAMP BRACKET.....	10914-888
104120	12	BAFFLE PLATE.....	9999-1411
104121	13	BAFFLE PLATE.....	9999-1412
104122	14	BAFFLE PLATE.....	9999-1413
	15	TAP BOLT, 3/8" x 5/8" Hex.Hd.S. with 3/8" Plate Washer and 3/8" Pl.S.Lock Washer (11/64" x 7/64")	
32843	16	PIN, 7/8" x 2-1/4" with 3/16" x 1-1/2" S.Cotter.....	B-10338-1
210786	17	PIPE NIPPLE, 1-1/2".....	B-10375-2
	18	BOLT, 3/4" x 9-1/2" Sq.Hd. with 3/4" Hex.Nut, 3/4" Pl.S.Lock Washer (5/16" x 7/32") and Washer Ref.18a	
199406	18a	C.I. WASHER.....	8065-206
164273	19	FOUNDATION BOLT, 5/8" x 7-1/2" with 5/8" Hex.Nut and 5/8" Pl. S.Lock Washer (17/64" x 3/16").....	7913-310
	20	BOLT, 3/4" x 12-1/4" Sq.Hd. with 3/4" Hex.Nut, 3/4" Pl.S.Lock Washer (5/16" x 7/32") and Washer Ref.18a	

2-25-38

UNION SWITCH & SIGNAL CO.

PIECE	REF.	DESCRIPTION	DWG. REF.
	21	BOLT, 3/4" x 5" Sq.Hd. with 3/4" Hex.Nut and 3/4" Pl.S.Lock Washer (5/16" x 7/32")	
	22	BOLT, 3/4" x 2-1/2" Sq.Hd. with 3/4" Hex.Nut and 3/4" Pl.S. Lock Washer (5/16" x 7/32")	
	23	TAP BOLT, 3/8" x 5/8" Hex.Hd. with 3/8" Pl.S.Lock Washer (11/64" x 7/64")	
	24	BOLT, 5/8" x 2-1/8" Sq.Hd. with 5/8" Hex.Nut and 5/8" Plate Washer	
	25	STRAIGHT BOX CONNECTOR, 1-1/2" M.I.Galv.	
	26	CONDUIT, 1-1/2" Galv.Single Strip Flexible (Orders should specify length desired)	
	27	LAG SCREW, 3/4" x 6"	
	28	TAP BOLT, 3/8"-16 x 1" Hex.Hd.S. with 3/8" Pl.S.Lock Washer (11/64" x 7/64")	
1207	29	TAPER PIN.....	8059-1
	30	CONDUIT BUSHING, 1-1/2"	
102730	31	SEPARATOR.....	8065-222
157329	32	SWITCH LAMP (When ordering refer to Plate R-105).....	C-9139-8
	33	1" CONDUIT COUPLING	
	34	1" CONDUIT ELBOW	
	35	CONDUIT, 1" Galv.Flex.S. (Orders should specify length desired)	
	36	CIRCUIT CONTROLLER OPERATING ROD.....	B-10287-6
	37	R.H. SWITCH FOOT.....	B-8181-53
	37a	L.H. SWITCH FOOT.....	B-8181-53
	38	BOLT with Hex.Nut and Lock Washer for attaching Switch Foot to Rail	

2-25-38

PLATE R-51C

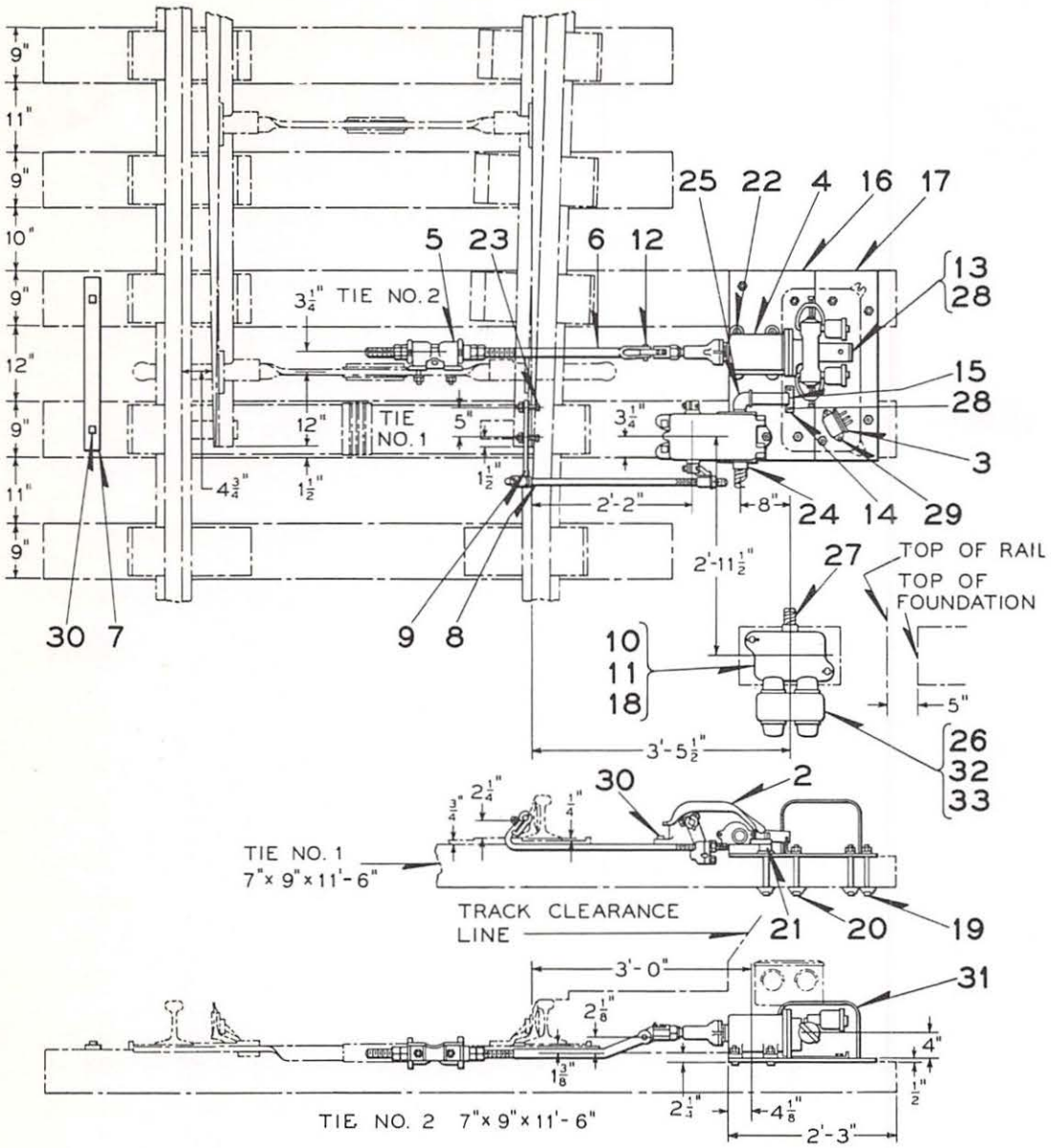

A

SINGLE SWITCH LAYOUT WITH DIRECT ACTING CYLINDER AND VALVE

7-14-42

UNION SWITCH & SIGNAL CO.

CAR RETARDER

DETAIL PARTS

SINGLE SWITCH LAYOUT WITH 5" x 6" DIRECT ACTING CYLINDER VALVE AND CIRCUIT CONTROLLER

(Located 3'-0" from Gage Line to Center of Cylinder and 2'-2" from Gage Line to Center of Circuit Controller Shaft. For 131# R.E.Rail. For N.& W. R.R.)

Order by Plate, Piece, Reference and Abbreviated Description Given in Heavy Face Type Only

PIECE	REF.	DESCRIPTION	DWG. REF.
	A	R.H. INSULATED SWITCH LAYOUT with 5" x 6" Direct Acting Cylinder Valve (400-Ohms, D.C.Magnets) "ES-20" Color Light Electric Switch Lamp and "U-5" Universal Switch Circuit Controller	C-5075-25
	Aa	L.H. INSULATED SWITCH LAYOUT with 5" x 6" Direct Acting Cylinder Valve (400-Ohms, D.C.Magnets) "ES-20" Color Light Electric Switch Lamps and "U-5" Universal Switch Circuit Controller	C-5075-25
209313	2	"U-5" SWITCH CIRCUIT CONTROLLER 4-Way, 2 and 3 Position. For details refer to Plate J-1047	D-1576-32
176646	3	STYLE "RM-21" RECTIFIER	B-12632-7
213557	4	5" x 6" DIRECT ACTING SWITCH CYLINDER (When ordering refer to Plate R-66)	C-3668-24
193283	5	WEATHERPROOF SWITCH POINT ADJUSTER with 2 Adjusting Nuts and Mounting Bolts	B-8060-57
222909	6	SWITCH OPERATING ROD 3'-10-1/2" with 2 Adjusting Nuts	B-8240-274
81541	7	TIE STRAP 2'-5"	B-9613-21
222913	8	CIRCUIT CONTROLLER OPERATING ROD 2'-9" with 1/8" P.T. Straight Hydraulic Fitting	B-10287-115
216335	9	SWITCH LUG WITH MOUNTING BOLTS	B-8060-48
211732	10	JUNCTION BOX (When ordering refer to Plate L-1251)	C-9180-19
211769	11	CABLE OUTLET with Gaskets Refs.11a and 11b	B-10342-111
211767	11a	GASKET used between Switch Lamp and Cable Outlet	8078-991
211768	11b	GASKET used between Junction Box and Cable Outlet	8078-992
22589	12	PIN 7/8" x 2-1/4" with 3/16" x 1-1/2" S.Cotter	B-10338-1
104120	13	BAFFLE	9999-1411
212955	14	BAFFLE	9999-1413
177840	15	PIPE NIPPLE	B-10925-2
230450	16	BASE PLATE 1/2" x 14" x 2'-6-1/2"	B-8325-158
230452	17	BASE PLATE 1/2" x 10" x 2'-6-1/2"	B-8325-158
163300	18	FOUNDATION BOLT 1/2" x 14" for mounting Junction Box to Foundation (Not shown)	7913-23
	19	BOLT 3/4" x 7-1/2" Sq.Hd. with Washer Ref.19a, 3/4" Hex.Nut and 3/4" Plain S.Lock Washer (5/16" x 7/32")	
199406	19a	WASHER	8065-206

UNION SWITCH & SIGNAL CO.

PIECE	REF.	DESCRIPTION	DWG. REF.
	20	BOLT 3/4" x 10" Sq.Hd. with Washer Ref.19a, 3/4" Hex.Nut and 3/4" Plain S.Lock Washer (5/16" x 7/32")	
102730	21	SEPARATOR.....	8065-222
	22	BOLT 3/4" x 2-1/2" Sq.Hd. with 3/4" Hex.Nut and 3/4" Plain S. Lock Washer (5/16" x 7/32")	
	23	BOLT, Ref.23a with 3/4" Hex.Nut and 3/4" Plain S.Lock Washer (5/16" x 7/32")	
34067	23a	BOLT, 3/4" x 3-1/2" Sq.Hd. for Ref.23.....	8132-224
	24	JAKE STRAIGHT BOX CONNECTOR 1-1/2" M.I.	
	25	STREET ELL, 1-1/2" M.I.Gal.	
	26	TAP BOLT, 1/2" x 1-1/4" Hex.Hd.S. with 1/2" Plain S.Lock Washer (7/32" x 5/32") for fastening Cable Outlet to Junction Box and Switch Lamp	
	27	CONDUIT, 1-1/2" Gal.Single Strip Flexible (Orders should specify length desired)	
	28	TAP BOLT, 3/8" x 3/4" Hex.Hd.S. with 3/8" Plain S.Lock Washer (11/64" x 7/64") and 3/8" Std.Plate Washer	
	29	TAP BOLT, 3/8" x 1" Hex.Hd.S. with 3/8" Plain S.Lock Washer (11/64" x 7/64")	
	30	LAG SCREW, 3/4" x 6"	
213938	31	R.H. CYLINDER COVER COMPLETE.....	C-2065-34
213939	31a	L.H. CYLINDER COVER COMPLETE.....	C-2065-34
223323	32	STYLE "ES-20" COLOR LIGHT SWITCH LAMP (When ordering refer to Plate R-105).....	C-9139-5
145877	33	ELECTRIC LAMP.....	B-12409-18

7-14-42

PLATE R-65

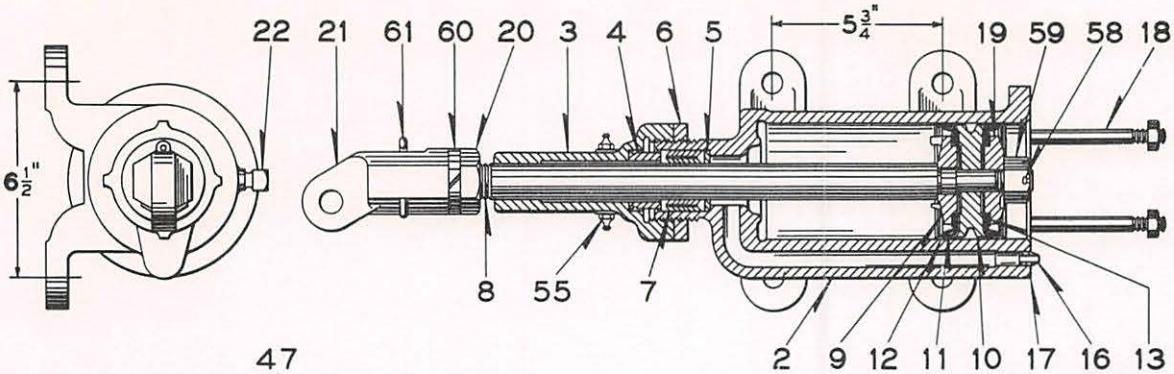

A

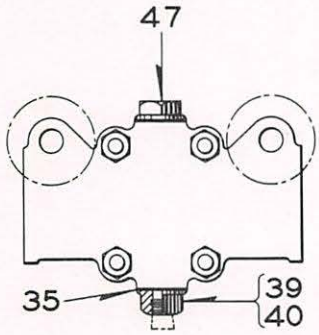

OUTLINE OF VALVE
LOOKING IN DIRECTION
OF ARROW

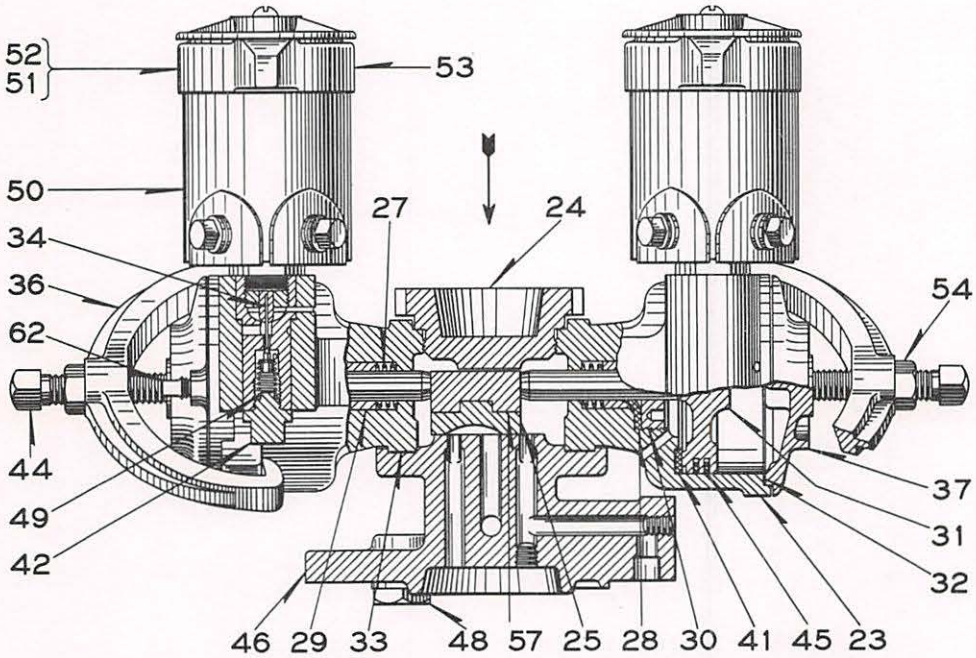

B

4" x 6" DIRECT ACTING SWITCH CYLINDER AND SWITCH VALVE

4-12-45

UNION SWITCH & SIGNAL

CAR RETARDERS

DETAIL PARTS

4 in. x 6 in. DIRECT ACTING SWITCH CYLINDER AND SWITCH VALVE

Order by Plate, Piece, Reference and Abbreviated Description Given in
Heavy Face Type Only

PIECE	REF.	DESCRIPTION	DWG. REF.
93301	A	4 in. x 6 in. DIRECT ACTING SWITCH CYLINDER COMPLETE without valve	C-3668-14
99476	Aa	4 in. x 6 in. DIRECT ACTING SWITCH CYLINDER COMPLETE with 400-ohm Switch Valve (Two Piece Type Magnet Caps with Finger Holes) (Includes 1-A and 1-B)	C-3668-15
110971	Ab	4 in. x 6 in. DIRECT ACTING SWITCH CYLINDER COMPLETE with 130-ohm Switch Valve (Two Piece Type Magnet Cap with Finger Holes) (Includes 1-A and 1-Ba)	C-3668-15
131831	Ac	4 in. x 6 in. DIRECT ACTING SWITCH CYLINDER COMPLETE with 400-ohm Switch Valve (Solid Type Magnet Caps) (Includes 1-A and 1-Bb)	C-3668-15
158853	Ad	4 in. x 6 in. DIRECT ACTING SWITCH CYLINDER COMPLETE with 130-ohm Switch Valve (Solid Type Magnet Caps) (Includes 1-A and 1-Bc)	C-3668-15
111210	B	SWITCH VALVE COMPLETE with 400-ohm magnets (Two Piece Type Magnet Caps with Finger Holes)	C-6680-1
111209	Ba	SWITCH VALVE COMPLETE with 130-ohm magnets (Two Piece Type Magnet Caps with Finger Holes)	C-6680-1
131830	Bb	SWITCH VALVE COMPLETE with 400-ohm magnets (Solid Type Magnet Caps)	C-6680-1
158852	Bc	SWITCH VALVE COMPLETE with 130-ohm magnets (Solid Type Magnet Caps)	C-6680-1
92927	2	CYLINDER	C-3668-17
92995	3	STUFFING BOX NUT	8082-171
93024	4	GLAND	8327-38
93025	5	COLLAR	8072-594
92994	6	JAM NUT	8082-170
C.N.67084	7	ONE SET OF PACKING RINGS	
93212	8	PISTON ROD	8195-73
94012	9	END FOLLOWER	8420-25
92936	10	INTERMEDIATE FOLLOWER	8420-23
92882	11	FOLLOWER	8423-10

UNION SWITCH & SIGNAL

PIECE	REF.	DESCRIPTION	DWG. REF.
36485	12	GASKET	8078-75
47566	13	GASKET	8078-596
93059	14	WASHER (Used with Ref.15) Not shown	7826-249
93026	15	NUT (Originally used in place of Ref.59) Not shown	8265-233
1091	16	BUSHING	8350-45
7569	17	GASKET	8078-48
7571	18	STUD with 1/2 in. Hex.Nut	8115-19
92937	19	END FOLLOWER	8420-24
52195	20	NUT	8265-164
106207	21	SCREW EYE	8150-56
1090	22	PLUG	B-9511-1
76149	23	VALVE CHAMBER COMPLETE (Includes Valve Seat, Plugs and Gaskets)	C-7471-1
7574	24	PLUG	B-9511-1
20920	25	D-VALVE	C-7471-4
	26	#0 GREASE CUP (Used previous to 4-14-31) (Not shown)	
6167	27	COIL SPRING	B-8124-2
6159	28	GASKET	8078-18
3758	29	BUSHING	8350-32
4351	30	PACKING NUT	8109-86
6347	31	PISTON	B-8328-6
6363	32	WASHER (for Cylinder Head)	8078-19
6233	33	WASHER (for Valve Seat)	8078-60
3100	34	VALVE PIN	7625-15
6362	35	WASHER (for Air Inlet)	8078-19
77385	36	YOKE COMPLETE with Bolt and Nut	B-8174-1
6234	37	HEAD	B-8422-11
6235	39	AIR INLET NUT	8082-28
40981	40	STRAINER	10933-2
27432	41	SEALING WASHER 1/8 in. thick	8078-19
6369	42	SCREW PLUG	9511-33
5475	44	BOLT for Yoke	8280-10

UNION SWITCH & SIGNAL

PIECE	REF.	DESCRIPTION	DWG. REF.
972	45	PISTON RING	8197-1
111208	46	CYLINDER HEAD COMPLETE (Includes two 1/8 in. C.I. Pipe Plugs)	B-8422-18
134034	46a	CYLINDER HEAD COMPLETE with D-Valve and Lock Block (Includes 1-46, 1-25 and 1-57)	B-8422-18
21394	47	NUT	8082-89
	48	BOLT, 1/2 in. x 4-3/4 in. Sq.Hd. with 1/2 in. Hex.Nut	
3102	49	COIL SPRING	7625-5
75923	50	MAGNET, 400-ohms, COMPLETE (Without Armature, Cap, Stem and Spring)	8342-159
93740	50a	MAGNET, 400-ohms, COMPLETE with Armature, Stem, Spring and two piece type magnet cap with finger holes	8342-21
73261	50b	MAGNET, 400-ohms, COMPLETE with Armature, Stem, Spring and solid type magnet cap	8342-21
73385	50c	MAGNET, 130-ohms, COMPLETE (Without Armature, Cap, Stem and Spring)	8342-159
73515	50d	MAGNET, 130-ohms, COMPLETE with Armature, Stem, Spring and two piece type magnet cap with finger holes	8342-21
75932	50e	MAGNET, 130-ohms, COMPLETE with Armature, Spring and solid type magnet cap	8342-21
73519	51	ARMATURE AND STEM COMPLETE	8157-27
64642	52	RELEASING SPRING	8735-478
75967	53	MAGNET CAP, COMPLETE (two piece type with finger holes)	C-1992-9
79249	53a	MAGNET CAP, (Solid Type)	C-1992-9
20316	54	NUT for Ref.44	B-8265-1
C.N.39137	55	LUBRICATION FITTING, 1/8 in. Pipe Thread	
6275	57	LOCK BLOCK	C-2854-1
	58	COTTER, 1/8 in. x 1-1/2 in. S.	
147899	59	NUT	8265-298
	60	LOCK WASHER, 1-1/4 in. Pl.S. (7/16 in. x 1/4 in.)	
	61	COTTER, 1/4 in. x 3 in.	
	62	PIPE PLUG, 1/8 in.	

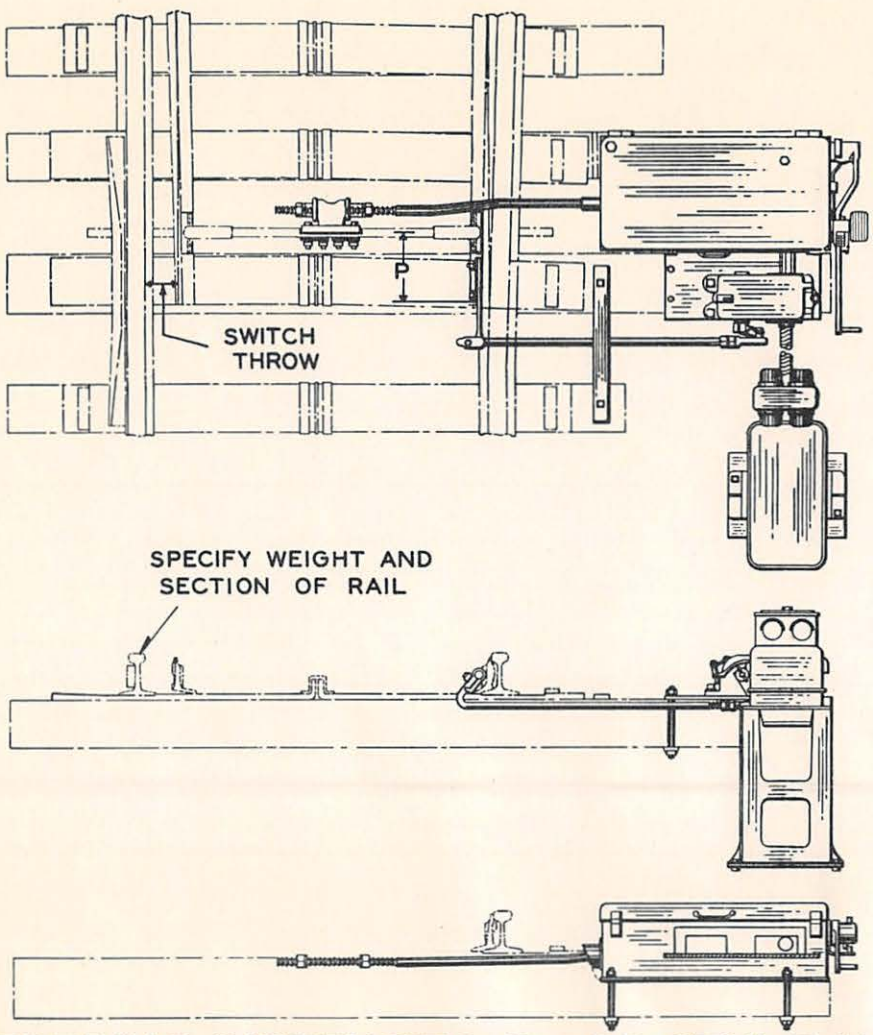

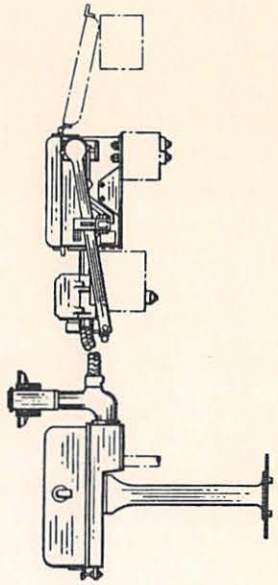

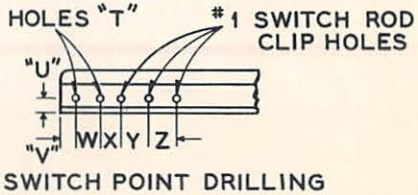

10-15-54

ORDERING INSTRUCTIONS FOR STYLE NA-15E.P. TOGGLE SWITCH MACHINE

UNION SWITCH & SIGNAL
DIVISION OF WESTINGHOUSE AIR BRAKE COMPANY

ORDERING INSTRUCTIONS FOR COMPLETE SWITCH MACHINE LAYOUTS

LAYOUT AND FITTINGS:

In cataloging NA-15 Switch Machines, we do not show any standard layout and fittings since most railroads have standards of their own for such equipment. Layouts shown are only typical in order to give general information by naming the various fittings to help us correctly interpret the customer's order.

Orders for complete switch layouts and fittings, such as gage plates, operating rods, etc. should be accompanied with the following information:

1. Dimensioned print of the switch to which the machine is to be applied, showing:
   (a) Weight and section of rail.
   (b) Length of switch rail.
   (c) Switch point dimensions U-V-W-X-Y-Z, and size of holes T.
   (d) Cross section of ties giving face and depth. Plan should show spacing of ties and dimension from end of point to edge of point tie.
   (e) Switch throw at point.
   (f) Distance P between center of switch rod and end of switch point.
2. Plan showing design and dimensions of rail braces, switch rods, and rail clips (furnished by Railroad).
3. Design of adjusting bracket for switch rod. Unless otherwise specified, we will furnish weatherproof type.
4. Plan showing design and dimensions of gage, riser and butt plates if furnished by Railroad. If we are to supply these items we will furnish insulated butt joint gage plates and A. A. R. standard riser and butt plates. Unless otherwise specified, we will furnish three gage plates with each layout.
5. State whether R. H. or L. H. layout and whether point adjacent to the machine is to be normally open or closed.
6. Unless otherwise specified, we will furnish our standard rods.
7. Specify catalog reference of Switch Machine desired.

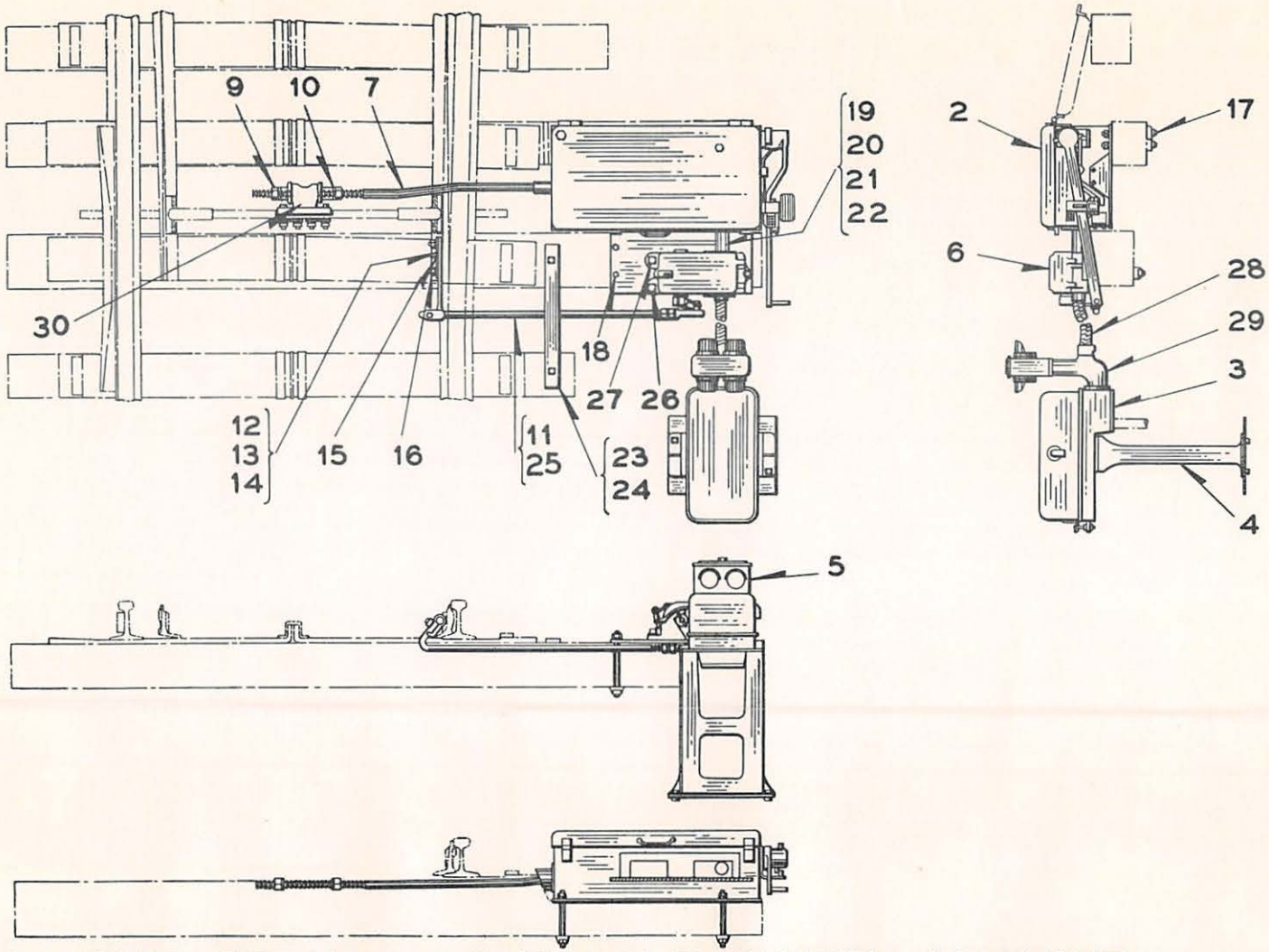

10-15-54 LAYOUT OF NA-15 E.P. TOGGLE SWITCH MACHINE

UNION SWITCH & SIGNAL
DIVISION OF WESTINGHOUSE AIR BRAKE COMPANY

LAYOUT OF NA-15 E.P. TOGGLE SWITCH MACHINE

This plate is to be used when ordering detail fittings. Since most Railroads have standards of their own for this equipment, we do not show any piece numbers for a majority of the Detail Parts. Customers desiring repair parts can obtain them by listing Plate, Reference, Description and specific U.S.&S. layout drawing of the switch for which material was originally supplied.

Order by Plate, Piece, Reference and Abbreviated Description Given in Heavy Face Type Only

PIECE	REF.	DESCRIPTION	DWG. REF.
	2	STYLE NA-15 SWITCH MACHINE COMPLETE	D-2473-
	3	INSTRUMENT HOUSING AND JUNCTION BOX COMPLETE	C-16726-6
	4	CAST IRON FOUNDATION COMPLETE	C-16876-1
	5	ES-20 COLOR LIGHT SIGNAL COMPLETE	C-9139-5
	6	STYLE U-5 CIRCUIT CONTROLLERS COMPLETE, For details refer to Section "J" Catalog	D-1576
	7	OPERATING ROD COMPLETE (Inc. 1-7a, 1-8, 2-9 and 2-10)	B-8240-339
	7a	OPERATING ROD ONLY	B-8240-339
	8	BUSHING, Not Shown	8350-1124
UJ48176	9	1-1/4" HEX. NUT	
UJ47834	10	1-1/4" LOCK WASHER	
	11	CIRCUIT CONTROLLER ROD COMPLETE, For details refer to Plate J-1060	B-10287-86
	12	CIRCUIT CONTROLLER LUG	B-8060-153
	13	INSULATED BUSHING	8095-243
	14	INSULATION	B-9035-66
	15	PLATE	B-5542-15
	16	BOLT with Plain S. Lock Washer and Cotter	8132-378
	17	STUD with C.I. Washer, Hex. Nut, Sq. Nut and Plain S. Lock Washer	8261-172
	18	STUD with C.I. Washer, Hex. Nut, Sq. Nut and Plain S. Lock Washer	8261-185
	19	PIPE NIPPLE	B-10375-8
	20	WASHER	7826-69
	21	CONDUIT LOCK NUT	
	22	CONDUIT BUSHING	

10-25-54

UNION SWITCH & SIGNAL
DIVISION OF WESTINGHOUSE AIR BRAKE COMPANY

PIECE	REF.	DESCRIPTION	DWG. REF.
	23	TIE STRAP	B-9613-26
	24	LAG SCREW	
	25	STUD with C.I. Washer Hex. Nut, Sq. Nut, Cotter and Plain S. Lock Washer	8261-185
	26	MACHINE BOLT with Plain S. Lock Washer, Plate Washer and Hex. Nut	
	27	LAG SCREW AND PLATE WASHER	
	28	FLEXIBLE CONDUIT	
	29	STRAIGHT BOX CONNECTOR	
	30	ADJUSTING BRACKET (When ordering assemblies or details refer to Plate C-320)	B-8060-

10-25-54

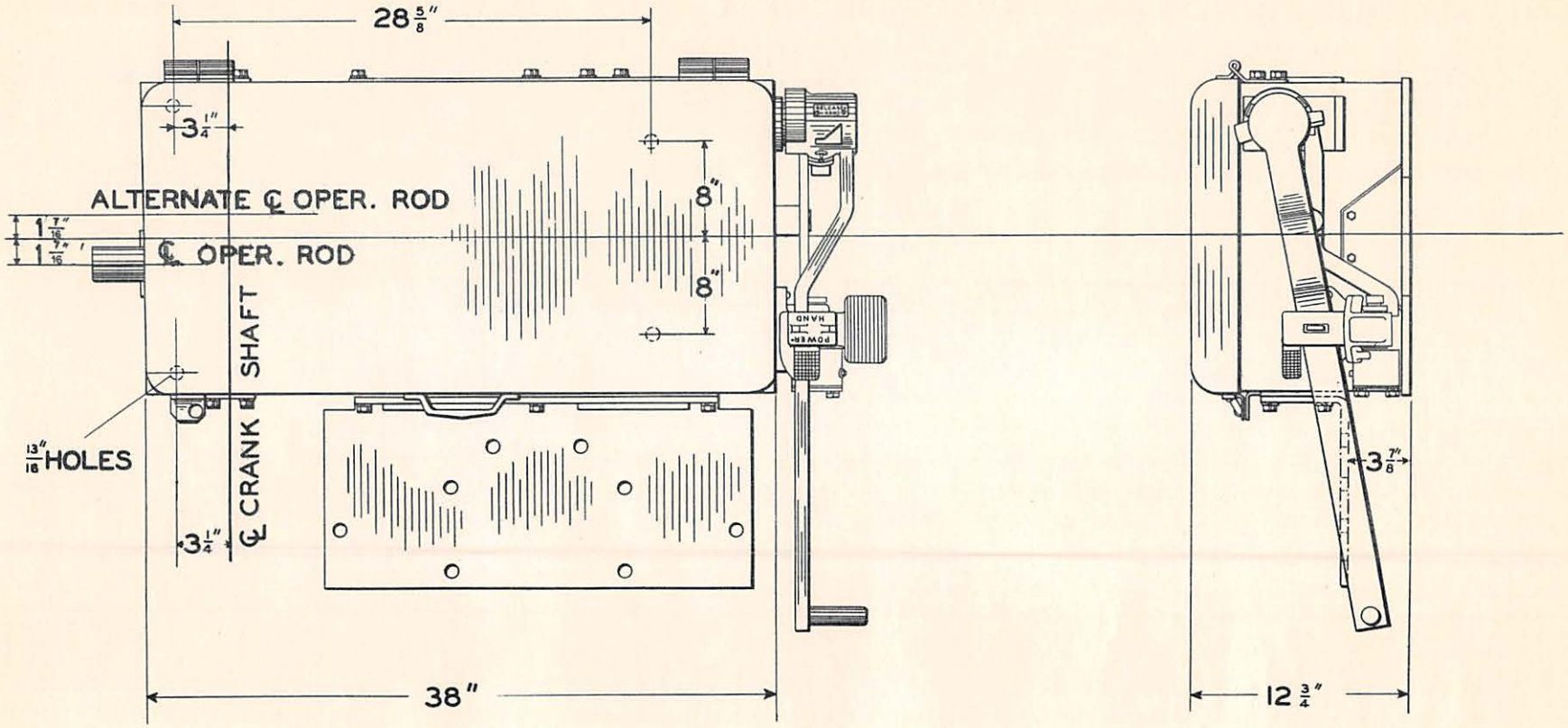

MOUNTING PLAN OF STYLE NA-15 SWITCH MACHINE

10-15-54

UNION SWITCH & SIGNAL
DIVISION OF WESTINGHOUSE AIR BRAKE COMPANY

STYLE NA-15 E. P. TOGGLE SWITCH MACHINE
Operated 14 Volts D. C. Nominal

Orders should specify whether machines are to be assembled for right or left hand application.

NA-15 Switch Machines will be furnished with 400 Ohm Magnets unless otherwise specified.

Order by Plate, Piece, Reference and Abbreviated Description Given in Heavy Face Type Only

PIECE	REF.	DESCRIPTION	DWG. REF.
	A	STYLE NA-15 DUAL CONTROL SWITCH MACHINE with 5-1/2" Cylinder, 400-Ohm D. C. Magnet with two piece caps with finger holes	D-2473-
	Aa	STYLE NA-15 DUAL CONTROL SWITCH MACHINE with 5-1/2" Cylinder, 400-Ohm D. C. Magnet with solid magnet caps	D-2473-
	B	STYLE NA-15 DUAL CONTROL SWITCH MACHINE with 6" Cylinder, 400-Ohm D. C. Magnet with two piece caps with finger holes	D-2473-
	Ba	STYLE NA-15 DUAL CONTROL SWITCH MACHINE with 6" Cylinder, 400-Ohm D. C. Magnet with solid magnet caps	D-2473-
	C	STYLE NA-15 SWITCH MACHINE with 5-1/2" Cylinder, 400-Ohm D. C. Magnet with two piece caps with finger holes, without Hand Throw Lever.	D-2473-
	Ca	STYLE NA-15 SWITCH MACHINE with 5-1/2" Cylinder, 400-Ohm D. C. with solid magnet caps without Hand Throw Lever	D-2473-
	D	STYLE NA-15 SWITCH MACHINE with 6" Cylinder, 400-Ohm D. C. Magnet with two piece magnet caps with finger holes, without Hand Throw Lever.	D-2473-
	Da	STYLE NA-15 SWITCH MACHINE with 6" Cylinder, 400-Ohm D. C. Magnet with solid magnet caps, without Hand Throw Lever	D-2473-

10-25-54

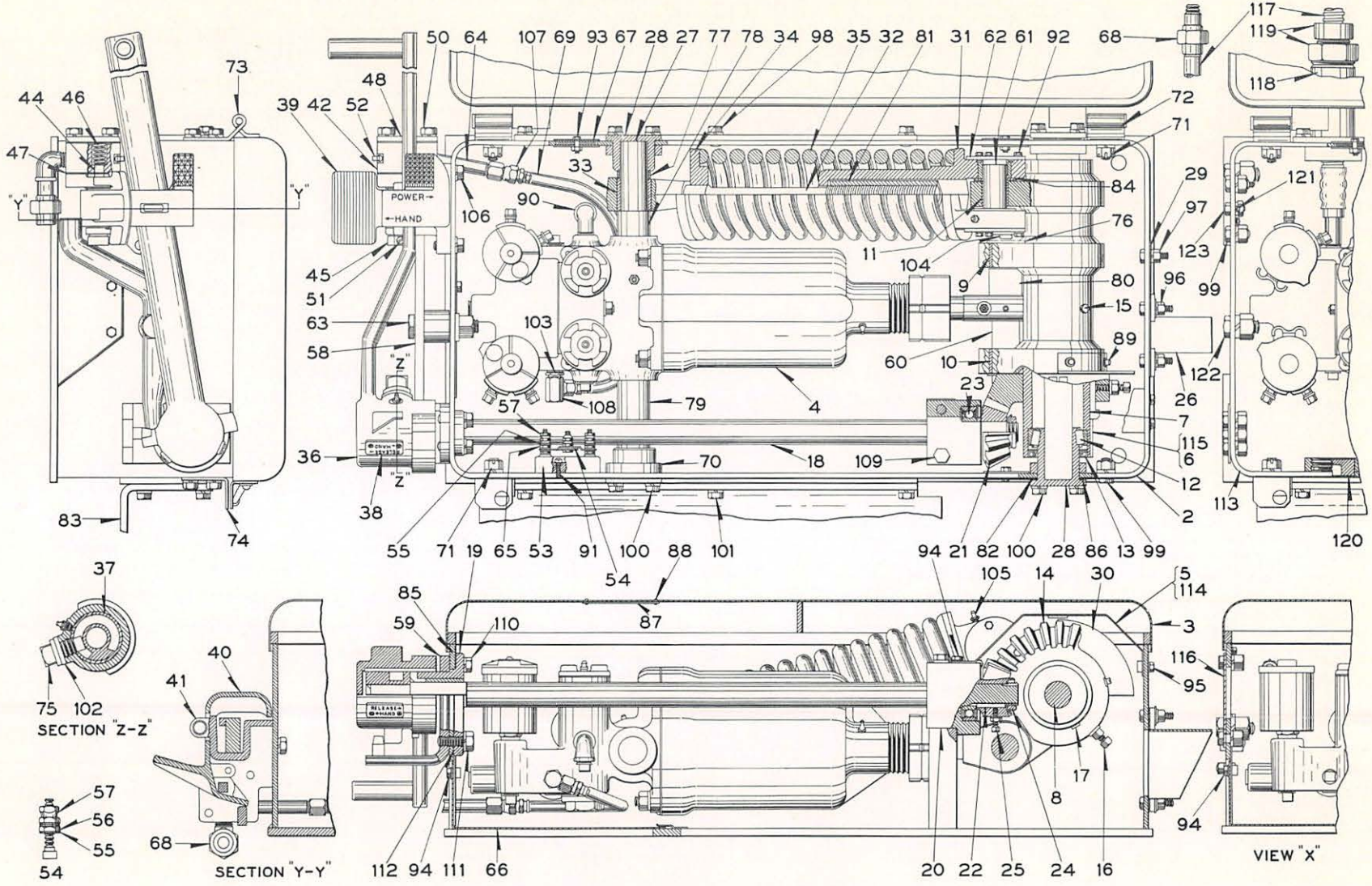

STYLE NA-15 SWITCH MACHINE

10-15-54

UNION SWITCH & SIGNAL
DIVISION OF WESTINGHOUSE AIR BRAKE COMPANY

NA-15 E. P. TOGGLE SWITCH MACHINE

DETAIL PARTS

Order by Plate, Piece, Reference and Abbreviated Description Given in Heavy Face Type Only

PIECE	REF.	DESCRIPTION	DWG. REF.
UN296920	2	HOUSING	D-2631-1
UN296860	3	COVER	C-9469-14
UN296320	4	5-1/2" CYLINDER AND VALVE, for details refer to Plate R-79	C-9469-26
UN313747	4a	5-1/2" CYLINDER AND VALVE, for details refer to Plate R-79	C-9469-26
UN303676	4b	6" CYLINDER AND VALVE, for details refer to Plate R-79	C-9469-31
UN297033	5	GEAR COVER	C-9469-25
UN296615	6	CRANKSHAFT (Includes Refs. 7 to 17 inclusive)	C-9469-12
UN296602	7	CRANKSHAFT	C-9469-12
UM296745	8	SHAFT	12501-223
UM296314	9	BUSHING, 1-3/8"	8350-1124
UM297297	10	BUSHING, 1-11/32"	8350-1124
UJ790337	11	BUSHING	
UJ66265	12	TAPERED ROLLER BEARING	
UJ67095	13	LOCK WASHER	
UM296609	14	SEGMENT GEAR	8425-258
UJ39137	15	LUBRICATING FITTING	
	16	SET SCREW, 3/8" - 16 x 1-1/2" Sq. Hd. I. (UJ50578) (Cad. Pl.) with 3/8" Plain S. Lock Washer (UJ47779) (Cad. Pl.) 3/8" Hex. Nut (UJ48009) (Cad. Pl.)	12471-
UM296666	17	KEY	9673-87
UN297221	18	HAND THROW SHAFT (Includes Ref. 18a to 25 inclusive)	C-9469-23
UN296919	18a	SHAFT	C-9469-23
UN296864	19	HAND THROW BEARING	C-9469-19

UNION SWITCH & SIGNAL
DIVISION OF WESTINGHOUSE AIR BRAKE COMPANY

PIECE	REF.	DESCRIPTION	DWG. REF.
UM296780	20	BEARING SEAT	C-9469-15
UM296608	21	PINION GEAR	8425-257
UM297220	22	KEY	9673-89
UJ66264	23	BALL BEARING	
UJ790334	23a	RETAINING RING	
UJ48573	24	LOCK NUT	
UJ47786	24a	LOCK WASHER	
	25	SET SCREW, 5/16" - 18 x 1" Sq. Hd. Cup Pt. (UJ50706) with 5/16" Plain S. Lock Washer (UJ47526) and 5/16" - 18 Hex. Jam Nut (UJ48007)	
UN297227	26	OPERATING ROD COVER	C-9469-27
UM300711	27	ROCKER SHAFT	12501-223
UM296914	28	ROCKER SHAFT BEARING	C-9469-19
UM297225	29	BAFFLE PLATE	C-9469-27
UN298913	30	MARKER	C-9469-29
UN296534	31	SPRING RETAINER with Spring Retainer Ref. 31a and two Bearings Ref. 31b	C-9469-11
UM296533	31a	SPRING RETAINER	C-9469-11
UJ66266	31b	BEARING COMPLETE with Snap Ring	
UN190375	32	SPRING RETAINER ROD with Spring Retainer Rod Ref. 32a and Bushing Ref. 33	C-9469-7
UM190361	32a	SPRING RETAINER ROD ONLY	C-9469-7
UM190392	33	BUSHING	8092-103
UM296530	34	SPRING RETAINER CAP	8094-99
UM296645	35	TOGGLE SPRING	7770-684
UN296939	36	HAND THROW LEVER	C-9469-24
UM289601	37	BUSHING	8092-145
UM298930	38	NAME PLATE	8286-185
	38a	MACHINE SCREW, No. 10-32 x 7/16" Flat Hd. S. (UJ522065) (Tin Pl.) and No. 10 Plain S. Lock Washer (UJ47733) (Tin Pl.)	
UN318612	39	HAND THROW LEVER LATCH AND AIR SHUT-OFF VALVE (Includes Refs. 40 to 52 inclusive)	C-9469-41
UM318611	40	LEVER LOCK	C-9469-40
UM318610	41	LEVER STAND	C-9469-39

UNION SWITCH & SIGNAL

DIVISION OF WESTINGHOUSE AIR BRAKE COMPANY

PIECE	REF.	DESCRIPTION	DWG. REF.
UM318554	42	BODY VALVE	C-9469-38
UM318466	43	VALVE COCK (Not Shown)	7625-40
UM318469	44	DRIVE SHAFT	9956-142
UM318464	45	BUSHING	8072-1132
UJ68302	46	SPRING	7770-713
UM318402	47	GASKET	8078-1925
UM318467	48	RETAINING PLATE	9999-3270
UM119951	49	VENTILATOR SCREEN (Not Shown)	10933-38
	50	TAP BOLT, 1/2" - 13 x 3" Hex. Hd. S. (UJ50104) (Cad. Pl.) with 1/2" Plain S. Lock Washer (UJ47783) (Cad. Pl.)	
	51	MACHINE SCREW, 1/4" - 20 x 1-1/4" Rd. Hd. S. (UJ52667) (Cad. Pl.) with 1/4" Plain S. Lock Washer (UJ47775) (Cad. Pl.)	
UJ32900	52	PIPE PLUG, S.	
UN323787	53	TEST CLIP TERMINAL BLOCK	9968-1525
UJ77052	53a	TERMINAL BLOCK with moulded in Binding Posts	9968-1030
UJ700846	54	TEST CLIP	7828-139
UM29103	56	NUT	8109-194
UM29101	57	BINDING NUT	8109-193
UN318503	58	INTERLOCKING LEVER	C-9469-37
UN296916	59	LEVER SHIFT CAM SUPPORT	C-9469-20
UM296572	60	CRANK PIN	8077-27
UM296531	61	SHAFT	12501-221
UM296532	62	COVER	10933-84
	63	LEVER STUD COMPLETE with 3/4" Plain S. Lock Washer (UJ47772) (Cad. Pl.) and 3/4" Hex. Nut (UJ48026) (Cad. Pl.)	
UM296913	63a	LEVER STUD ONLY	8301-70
UM318819	64	PIPE NIPPLE	B-10375-2
UM127260	65	NUT	8109-194
UM296922	66	VALVE COVER	C-9469-25
UM297304	67	COVER	7826-346
	68	1/2" MALE AND FEMALE UNION (UJ33596) with Washer Ref. 68a	
UM299078	68a	RESTRICTING WASHER	7828-382

UNION SWITCH & SIGNAL
DIVISION OF WESTINGHOUSE AIR BRAKE COMPANY

PIECE	REF.	DESCRIPTION	DWG. REF.
UJ75205	69	HOSE CONNECTION	
UM296858	70	CLAMP PLATE	9999-2885
	71	HINGE BOLT with 1/2" Plain S. Lock Washer (UJ47783) (Cad. Pl.), 1/2" Hex. Slotted Nut (UJ48090) (Cad. Pl.) and 1/8" x 1" S. Cotter (UJ48620) (Tin Pl.)	
UM296953	71a	1/2" HINGE BOLT (Drilled)	8280-202
UN296814	72	HALF HINGE (Right Hand)	12426-144
UN296815	73	HALF HINGE (Left Hand)	12426-144
UM296822	74	HASP	8299-165
UM192069	75	STUD	8090-161
UM296949	76	WASHER	7826-336
UM296929	77	SPACER	8350-862
UM322605	*77a	SPACER	8350-1170
UM296946	78	SPACER	8350-862
UM322606	*78a	SPACER	8350-1170
UM296947	79	SPACER	8350-862
UM322607	*79a	SPACER	8350-1170
UM296948	80	SPACER	8350-862
UM322608	*80a	SPACER	8350-1170
UM191309	81	SPRING RETAINER NUT	8265-322
UM296978	82	SHIM	12775-42
UM296868	83	CIRCUIT CONTROLLER SUPPORT (25-1/2" long x 11-1/2" wide)	C-9469-28
UM297481	83a	CIRCUIT CONTROLLER SUPPORT (25-1/2" long x 10-5/8" wide)	C-9469-28
UM25055	84	WASHER	7826-2
UM298928	85	SHIM WASHER	12775-45
UM300117	86	PLATE	9999-2964
UM298941	87	NAME PLATE	8225-1205
UJ49822	88	RIVET	10301-30
	89	MACHINE SCREW, No. 10-32 x 1/2" Fil. Hd. S. (UJ52355) (Tin Pl.) with No. 10 Plain S. Lock Washer (UJ47733) (Tin Pl.) and 3/16" S. Plate Washer (UJ47500) (Tin Pl.)	
UJ32457	90	1/2" ELL	

* Note: For N.A. - 15 Switch Machine without Hand Throw Lever per View X.

UNION SWITCH & SIGNAL
DIVISION OF WESTINGHOUSE AIR BRAKE COMPANY

PIECE	REF.	DESCRIPTION	DWG. REF.
	91	MACHINE SCREW, 1/4" - 20 x 7/8" (UJ52202) (Tin Pl.) with 1/4" Plain S. Lock Washer (UJ47775) (Tin Pl.)	
	92	CAP SCREW, 1/4" - 20 x 1/2" (UJ50012) (Tin Pl.) with 1/4" Plain S. Lock Washer (UJ47775) (Tin Pl.)	
	93	CAP SCREW, 1/4" - 20 x 3/4" Hex. Hd. S. (UJ50016) (Tin Pl.) with 1/4" Hex. Nut (UJ48002) (Tin Pl.)	
	94	CAP SCREW, 5/16" x 5/8" Hex. Hd. S. (UJ50035) (Cad. Pl.) with 5/16" Plain S. Lock Washer (UJ47526) (Cad. Pl.)	
	95	CAP SCREW, 5/16" - 18 x 3/4" (UJ50036) (Cad. Pl.) with 5/16" Plain S. Lock Washer (UJ47526) (Cad. Pl.)	
	96	CAP SCREW, 3/8 - 16 x 1-1/2" Hex. Hd. S. (UJ50057) (Cad. Pl.) with 3/8" Std. S. Plate Washer (UJ47502) (Cad. Pl.) 3/8" Plain S. Lock Washer (UJ47779) (Cad. Pl.) and 3/8" Hex. Nut (UJ48009) (Cad. Pl.)	
	97	CAP SCREW, 3/8" - 16 x 1-1/4" Hex. Hd. S. (UJ50056)(Cad. Pl.) with 3/8" Std. S. Plate Washer (UJ47502) (Cad. Pl.) 3/8" Plain S. Lock Washer (UJ47779) (Cad. Pl.) and 3/8" Hex. Nut (UJ48009) (Cad. Pl.)	
	98	CAP SCREW, 1/2" - 13 x 1/2" Hex. Hd. S. (UJ50235) (Cad. Pl.) with 1/2" Plain S. Lock Washer (UJ47783) (Cad. Pl.)	
	99	TAP BOLT, 1/2" - 13 x 1" Hex. Hd. S. (UJ50088) (Cad. Pl.) with 1/2" Plain S. Lock Washer (UJ47783) (Cad. Pl.) and 1/2" Hex. Nut (UJ48013) (Cad. Pl.)	
	100	TAP BOLT, 1/2" - 13 x 1-3/8" Hex. Hd. S. (UJ46448) (Cad. Pl.) with 1/2" Plain S. Lock Washer (UJ47783) (Cad. Pl.)	
	101	TAP BOLT, 1/2" - 13 x 1-1/8" Hex. Hd. S. (UJ46446) (Cad. Pl.) with 1/2" Plain S. Lock Washer (UJ47783) (Cad. Pl.)	
UJ47823	102	1" PLAIN S. LOCK WASHER (Cad. Pl.)	
UJ32024	103	PIPE REDUCING BUSHING, 3/8" x 1/2" (Galv.)	
UJ48646	104	STEEL COTTER, 1/4" x 2-1/4" (Tin Pl.)	
UJ39137	105	1/8" LUBRICATING FITTING	
	106	TAP BOLT, 1/2" - 13 x 1" Hex. Hd. S. (UJ50088) (Cad. Pl.) with 1/2" Plain S. Lock Washer (UJ47783) (Cad. Pl.)	
UJ335007	107	3/8", STRAIGHT ADAPTER UNION	
UJ335008	108	3/8", 90° ANGLED ADAPTER UNION	
	109	MACHINE BOLT, 1/2" - 13 x 4-1/2" Hex. Hd. (UJ46240) with 1/2" Plain S. Lock Washer (UJ47783) (Cad. Pl.)	
	110	TAP BOLT, 1/2" - 13 x 1-1/2" Hex. Hd. S. (UJ46449) (Cad. Pl.) with 1/2" Plain S. Lock Washer (UJ47783) (Cad. Pl.)	
	111	TAP BOLT, 5/8" - 11 x 1-1/2" Hex. Hd. S. (UJ50112) (Cad. Pl.) with 5/8" Plain S. Lock Washer (UJ47822) (Cad. Pl.	

UNION SWITCH & SIGNAL
DIVISION OF WESTINGHOUSE AIR BRAKE COMPANY

PIECE	REF.	DESCRIPTION	DWG. REF.
UM312739	112	SHIM WASHER	12775-45
UN320258	*113	HOUSING	D-2631-2
UN310719	*114	INDEX HOLDER COMPLETE	C-9469-33
UN310720	*115	CRANKSHAFT COMPLETE (Includes Refs. 7 to 13 inclusive and Ref. 15)	C-9469-32
UN310716	*116	COVER PLATE (For Plugging Hole for Hand Throw Shaft)	C-9469-33
UJ75221	*117	ARMORED HOSE CONNECTION	B-9046-4
UM26511	*118	2" PIPE NIPPLE	B-10375-1
UJ712011	*119	CABLE GRIP	
UJ32956	*120	2" PIPE PLUG, Csk. C.I.	
	*121	CAP SCREW, 1/4" - 20 x 5/16" Hex. Hd. S. (UJ50156) (Tin Pl.) with 1/4" Plain S. Lock Washer (UJ47775) (Tin Pl.)	
	*122	TAP BOLT, 3/4" - 10 x 1-1/2" Hex. Hd. S. (UJ50126) (Cad. Pl.) with 3/4" Plain S. Lock Washer (UJ47772) (Cad. Pl.) and 3/4" Hex. Nut (UJ48026) (Cad. Pl.)	
	*123	CAP SCREW, 3/8" - 16 x 3/4" Hex. Hd. S. (UJ50051) (Cad. Pl.) with 3/8" Plain S. Lock Washer (UJ47779) (Cad. Pl.) and 3/8" Hex. Nut (UJ48009) (Cad. Pl.)	
		* Note: For N.A. - 15 Switch Machine without Hand Throw Lever per View X.	

10-25-54

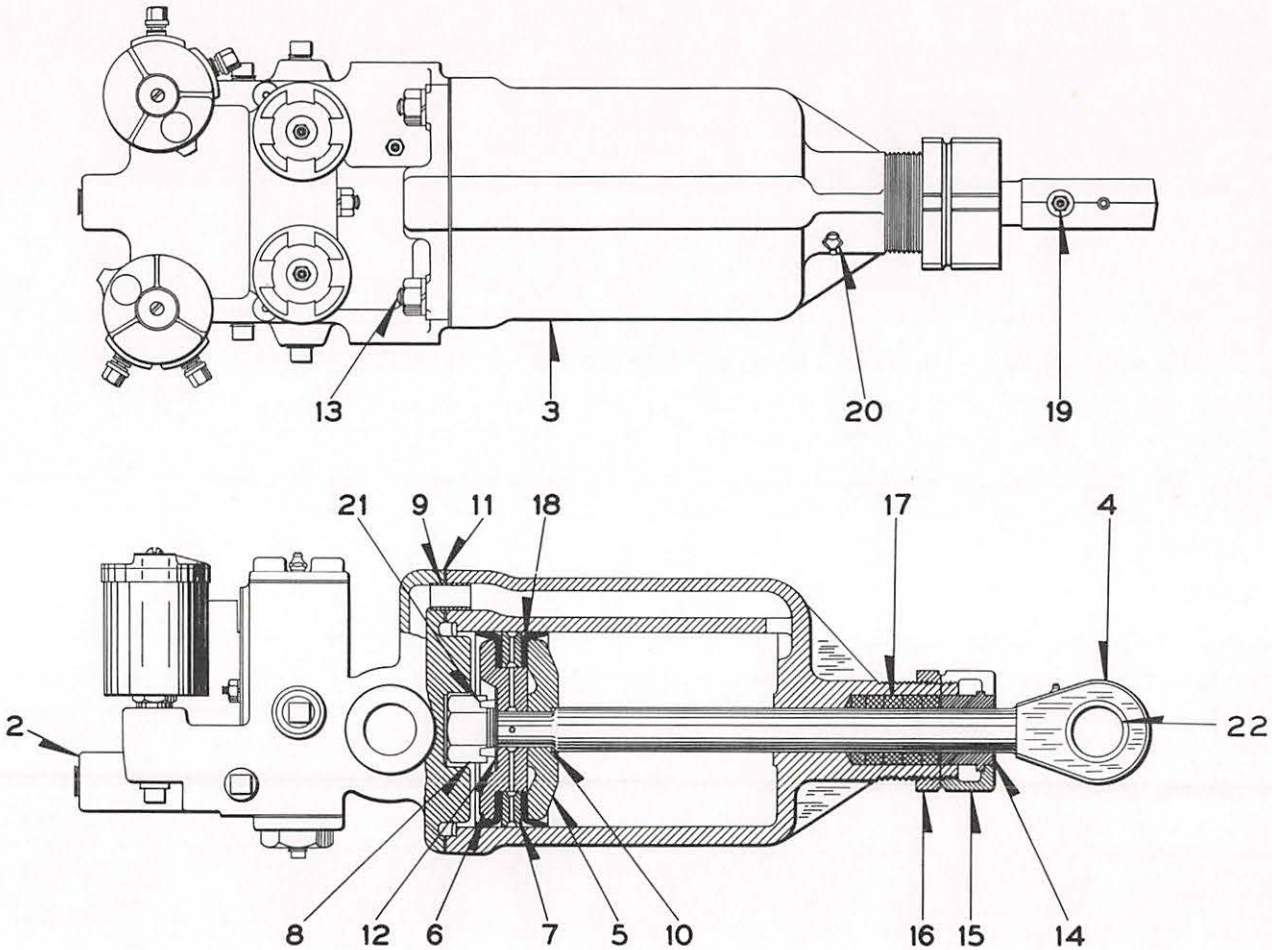

A

STYLE CP-10 CUT-OFF VALVE & CYLINDER

10-15-54

UNION SWITCH & SIGNAL
DIVISION OF WESTINGHOUSE AIR BRAKE COMPANY

STYLE CP-10 CUTOFF VALVE AND CYLINDER

FOR STYLE NA-15 E. P. TOGGLE SWITCH MACHINE

DETAIL PARTS

Order by Plate, Piece, Reference and Abbreviated Description Given in Heavy Face Type Only

STYLE CP-10 CUTOFF VALVE AND CYLINDER COMPLETE

PIECE	REF.	CYLINDER	VALVE	CAUTION PLATE	DWG. REF.
UN296320	A	Ref. 3	Ref. 2	With	C-9469-26
UN313747	Aa	Ref. 3	Ref. 2a	Without	C-9469-26
UN303676	Ab	Ref. 3a	Ref. 2	With	C-9469-31

PIECE	REF.	DESCRIPTION	DWG. REF.
UN296275	2	STYLE CP-10 VALVE (With two piece Magnet Caps with finger holes) For details refer to Plate R-80	D-2394-5
UN313749	2a	STYLE CP-10 VALVE (With Solid Magnet Caps) For details refer to Plate R-80	D-2394-5
UM296267	3	5-1/2" CYLINDER	C-9469-10
UM190035	3a	6" CYLINDER	C-9469-8
UN296319	4	PISTON ROD (Includes Bushing Ref. 22)	8195-101
UM296315	5	PISTON FOLLOWER for 5-1/2" Cylinder	8420-46
UM190355	5a	PISTON FOLLOWER for 6" Cylinder	8420-36
UM296317	6	PISTON FOLLOWER for 5-1/2" Cylinder	8420-48
UM190354	6a	PISTON FOLLOWER for 6" Cylinder	8420-35
UM296316	7	INTERMEDIATE PISTON FOLLOWER for 5-1/2" Cylinder	8420-47
UM190356	7a	INTERMEDIATE PISTON FOLLOWER for 6" Cylinder	8420-37
UM192802	8	PISTON NUT	8265-326
UM190413	9	SLEEVE	8350-861
UM190357	10	LEAD GASKET	8274-92
UM190353	11	GASKET	8078-1577
UM192801	12	GASKET	8078-1352

UNION SWITCH & SIGNAL
DIVISION OF WESTINGHOUSE AIR BRAKE COMPANY

PIECE	REF.	DESCRIPTION	DWG. REF.
	13	STUD Ref. 13a with 1/2" Plain S. Lock Washer (UJ47769) and 1/2" S. Hex. Nut (UJ48013)	
UM190861	13a	STUD	8115-203
UM68949	14	GLAND	8327-35
UM68951	15	COLLAR	8082-161
UM1102	16	JAM NUT	8082-17
UJ79116	17	PACKING RING, 5/8" x 1-1/4" x 2"	
AM90137	18	PACKING for 5-1/2" Cylinder	
UJ67417	18a	PACKING for 6" Cylinder	
UJ39137	19	1/8" LUBRICATING FITTING	
UJ39188	20	1/8" LUBRICATING FITTING	
UJ47754	21	1" LOCK WASHER	
UM296314	22	BUSHING	8350-1124

10-25-54

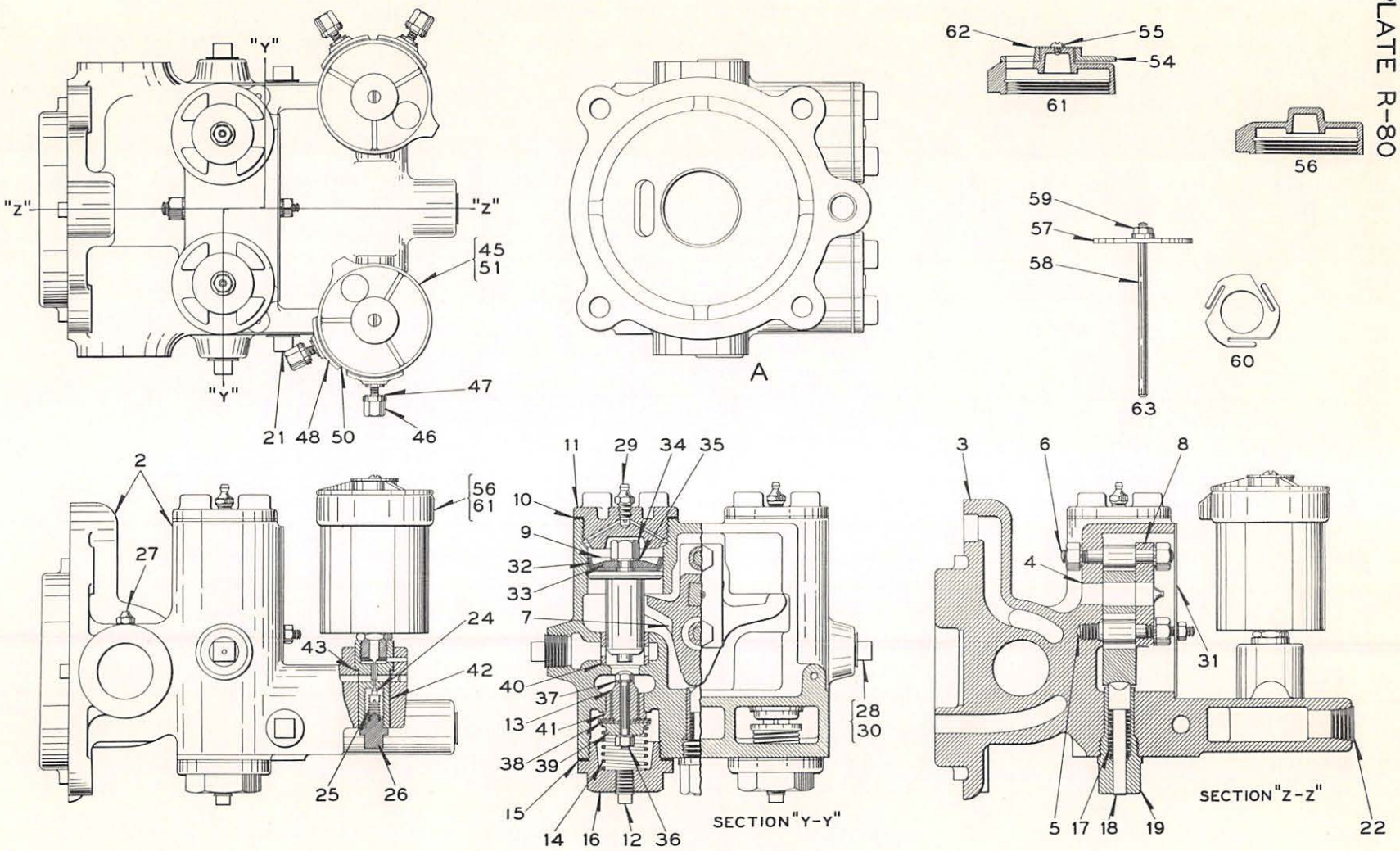

STYLE CP-10 CUT-OFF VALVE

10-15-34

UNION SWITCH & SIGNAL
DIVISION OF WESTINGHOUSE AIR BRAKE COMPANY

STYLE CP-10 CUTOFF VALVE FOR

NA-15 E. P. TOGGLE SWITCH MACHINE

DETAIL PARTS

Order by Plate, Piece, Reference and Abbreviated Description Given in Heavy Face Type Only

PIECE	REF.	DESCRIPTION	DWG. REF.
UN296275	A	STYLE CP-10 CUTOFF VALVE with D. C. Magnet Ref. 45 and two piece Magnet Caps with finger holes Ref. 61.	D-2394-5
UN313749	Aa	STYLE CP-10 CUTOFF VALVE with D. C. Magnet Ref. 51 and Solid Magnet Caps Ref. 56	D-2394-5
UN190420	2	VALVE without Magnets	D-2394-5
UN190350	3	VALVE BODY (Inc. 1-3a, 2-40, 2-41, 2-42, 6-43 and 2-44	D-2395-4
UM190034	3a	VALVE BODY ONLY	D-2395-4
UN190415	4	OPERATING ARM SHAFT COMPLETE	9956-105
	5	STUD Ref. 5a with 3/8" Plain S. Lock Washer (UJ47779) (Cad. Pl.), 3/8" S. Hex. Nut (UJ48009) (Cad. Pl.), 1/4" Plain S. Lock Washer (UJ47766) (Tin Pl.) and 1/4" S. Hex. Nut (UJ48002)	
UM190417	5a	STUD ONLY	8114-870
	6	STUD Ref. 6a with two 3/8" Plain S. Lock Washers (UJ47779) (Cad.Pl.) and two 3/8" S. Hex. Nuts (UJ48009) (Cad. Pl.)	
UM190418	6a	STUD ONLY	8114-870
UM149673	7	OPERATING ARM	C-9261-2
UM190416	8	CLAMPING PLATE	9999-1117
UN156432	9	PISTON (Inc. 1-9a, 1-32, 1-33, 1-34 and 1-35)	8328-125
UM241809	9a	PISTON ONLY.	8328-157
UM153493	10	GASKET.	8078-1392
UM149799	11	CYLINDER PLUG	9511-97
UJ32901	12	1/4" PIPE PLUG	
UN156363	13	VALVE STEM (Inc. 1-13a, 1-36, 1-38 and 1-39).	C-9261-3
UM153480	13a	VALVE STEM ONLY	9595-89
UM155097	14	VALVE SPRING.	8124-231
UM153492	15	GASKET.	8078-1392

UNION SWITCH & SIGNAL
DIVISION OF WESTINGHOUSE AIR BRAKE COMPANY

PIECE	REF.	DESCRIPTION	DWG. REF.
UM149798	16	CYLINDER PLUG	9511-98
UJ68785	17	PLUNGER SPRING	8124-267
UM153473	18	PLUNGER	8261-150
UM153474	19	SPRING SOCKET	8084-74
UJ32903	21	1/2" PIPE PLUG	
UJ32904	22	1/2" PIPE PLUG	
UN190411	23	STRAINER (Not shown)	B-10656-14
UM3100	24	PIN VALVE	7625-15
UJ68203	25	VALVE SPRING	7625-5
UM6369	26	SCREW PLUG	9511-33
UJ39137	27	1/8" LUBRICATING FITTING	
UM44253	28	PLUG (1/8" opening)	9511-25
UJ39188	29	1/8" LUBRICATING FITTING	
UM300960	30	PLUG (1/16" opening)	9511-25
UN190408	31	COVER PLATE for Ref. 2a	9999-1116
UJ67401	32	PISTON PACKING	
UM241808	33	WASHER	8332-106
UM241807	34	NUT	8265-243
UJ47672	35	3/8" LOCK WASHER	
	36	BOLT Ref. 36a with 1/4" Plain S. Lock Washer (UJ47775) (Tin Pl.), 1/4" - 20 S. Hex. Nut (UJ48002) (Tin Pl.) and Washer Ref. 37	
UM155146	36a	BOLT	8190-356
UM13873	37	WASHER	8078-302
UJ47182	38	GASKET	8078-1407
UM153481	39	WASHER	8350-768
UM153475	40	BUSHING	8350-765
UM74771	41	BUSHING	8350-618
UM76082	42	BUSHING	8350-619
UM6345	43	GASKET	8274-11
UM74772	44	PLUG (Not shown)	9511-50
UN126905	45	MAGNET, 400 Ohms D. C. for Ref. A (without wire guide)	8342-159

UNION SWITCH & SIGNAL
DIVISION OF WESTINGHOUSE AIR BRAKE COMPANY

PIECE	REF.	DESCRIPTION	DWG. REF.
	46	BINDING POST COMPLETE (Inc. 1-46a, 2-47, 1-48, 1-49 and 1-50 .	12451-
UJ71885	46a	BINDING POST ONLY.	8094-2226
UM821	47	WASHER	7828-4
UJ78025	48	BUSHING	8750-300
UM128142	49	INSULATED BUSHING (Not shown)	B-10269-1
UJ47615	50	GASKET.	8078-1262
UN75923	51	MAGNET 400 Ohm D. C. (with wire guide)	8342-159
	52	WIRE GUIDE COMPLETE (Not shown) (Inc. 1-52a, and 1-53) for Ref.51	
UM90027	52a	WIRE GUIDE ONLY	11078-4
UJ52537	53	MACHINE SCREW, No. 8-36 x 5/8" Rd. Hd. S. (Tin Pl.) (Not shown)	
UM75973	54	COVER	C-1992-9
UJ51684	55	MACHINE SCREW, No. 14-24 x 1/4" Rd. Hd. Br. (N. Pl.)	
UM79249	56	MAGNET CAP (Solid) for Ref. Aa.	C-1992-9
UM1707	57	ARMATURE	8157-27
UM1711	58	ARMATURE STEM.	B-9595-1
UM1509	59	NUT	8109-15
UM64642	60	SPRING	8735-478
UN75967	61	MAGNET CAP, for Ref. A (Inc. 1-61a, 1-54 and 1-55) (Two piece Cap with finger hole)	C-1992-9
UM75972	61a	MAGNET CAP ONLY	C-1992-9
UM75756	62	SPRING WASHER.	7328-331
	63	ARMATURE AND STEM ASSEMBLY COMPLETE	

10-25-54

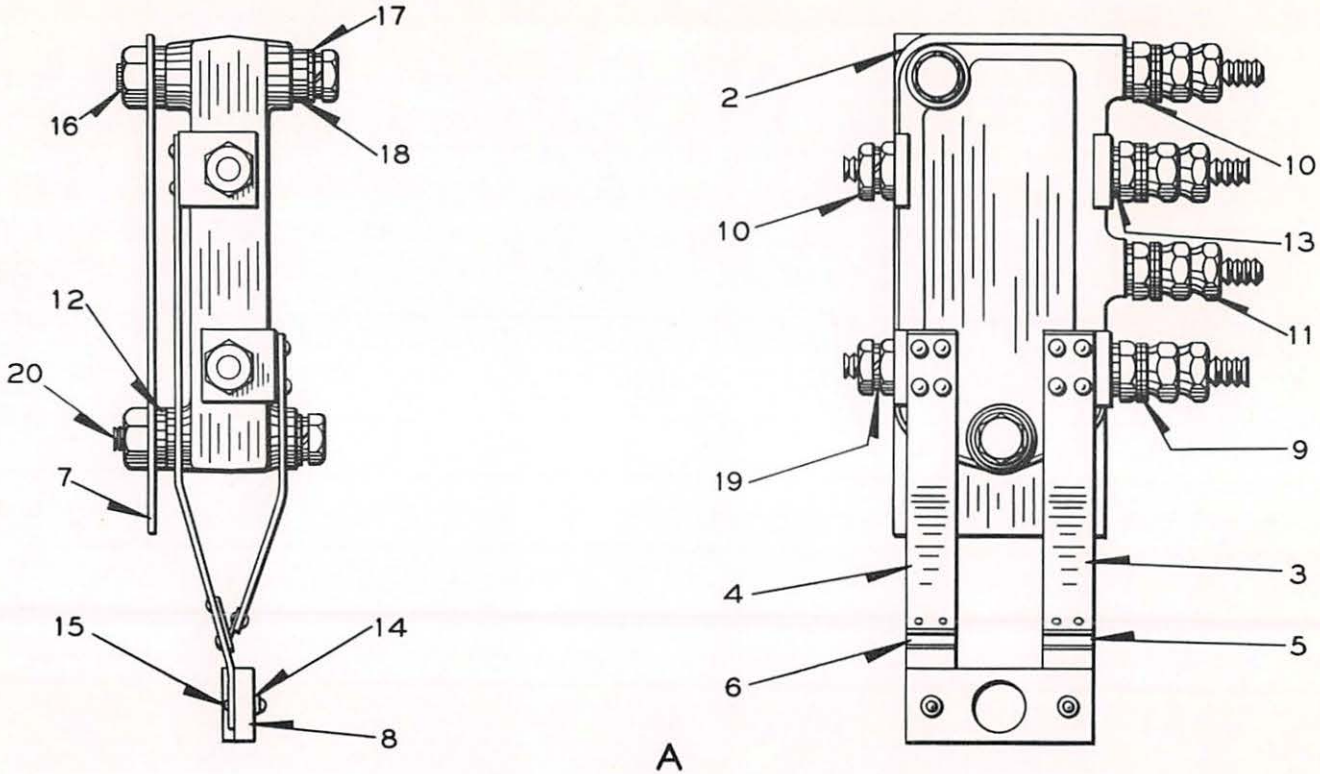

A

VALVE CUTOUT CONTACT

10-15-54

UNION SWITCH & SIGNAL
DIVISION OF WESTINGHOUSE AIR BRAKE COMPANY

VALVE CUTOUT CONTACT

(If so desired, may be used with "NA-15" Switch Machine)

Order by Plate, Piece, Reference and Abbreviated Description Given in Heavy Face Type Only

PIECE	REF.	DESCRIPTION	DWG. REF.
UN291680	A	VALVE CUTOUT CONTACT	9968-1465
UJ78271	2	TERMINAL BOARD, with Moulded in Binding Post	9968-1163
UN226202	3	CONTACT SPRING	8385-2717
UN226203	4	CONTACT SPRING	8385-2717
UN226204	5	CONTACT SPRING	8385-2717
UN226205	6	CONTACT SPRING	8385-2717
UM222872	7	INSULATION	8750-3010
UM229679	8	CONTACT SPRING INSULATION	8750-3610
UJ47818	9	WASHER	7828-139
UM29103	10	NUT	8109-194
UM29101	11	NUT	8109-193
UM291978	12	SPACER	8078-1848
UM131440	13	WASHER	7828-6
UM57032	14	WASHER	7828-218
UJ49812	15	RIVET	10301-1
	16	CAP SCREW, 1/4" - 20 x 2" Hex. Hd. S. (UJ50026) (Tin Pl.) with spacer Ref. 12 Washer Ref. 17, Washer Ref. 18, Washer Ref. 19 and 1/4" Hex. Nut (UJ48002) (Tin Pl.)	
UM84	17	WASHER	7828-6
UM36311	18	WASHER	8112-62
UJ47775	19	1/4" PLAIN S. LOCK WASHER (Tin Pl.)	
	20	CAP SCREW, 1/4" - 20 x 1-7/8" Hex. Hd. S. (UJ50154) (Tin Pl.) with Spacers Ref. 12, Washer Ref. 17, Washer Ref. 19 and 1/4" Hex. Nut (UJ48002) (Tin Pl.)	

10-25-54

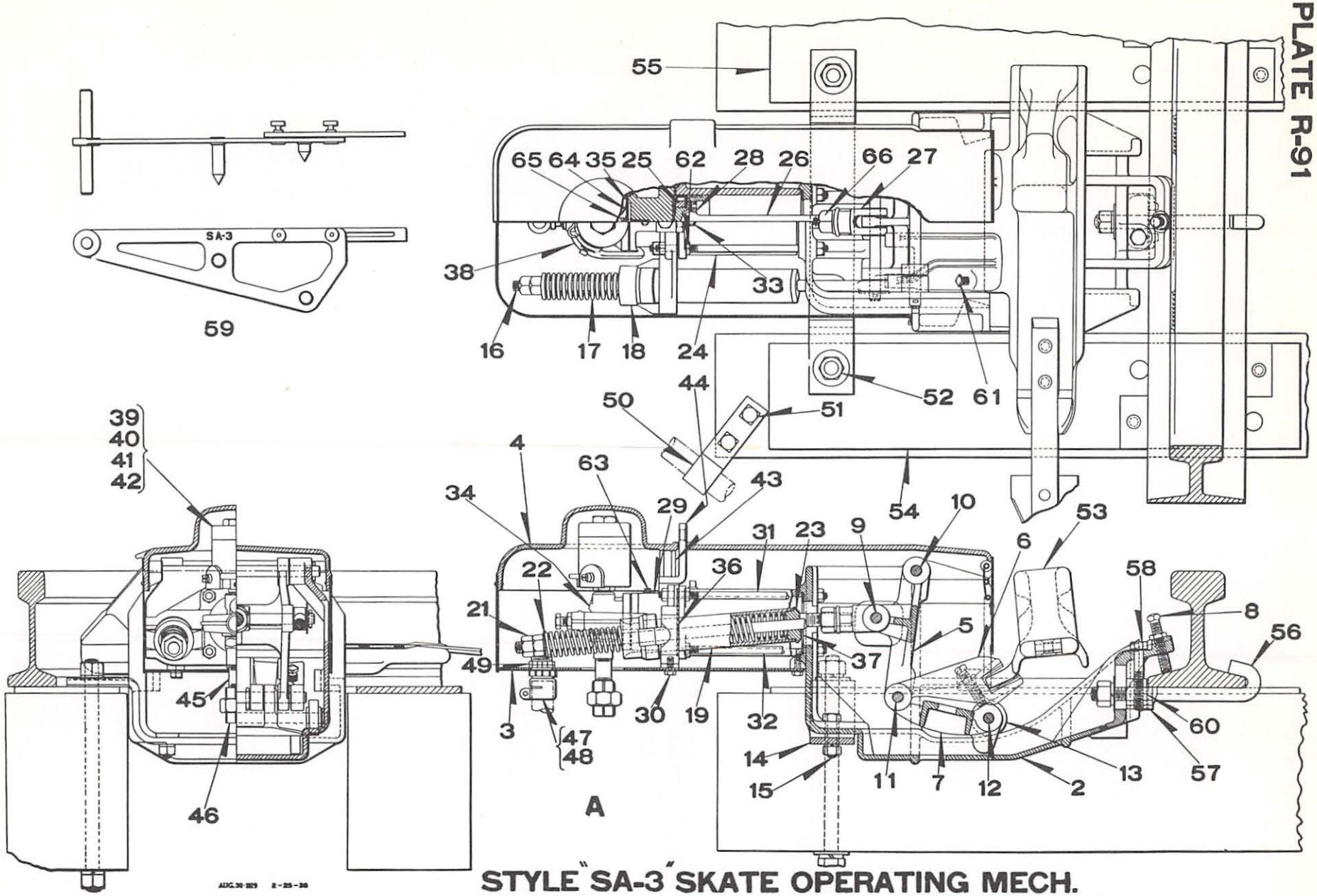

STYLE "SA-3" SKATE OPERATING MECH.

UNION SWITCH & SIGNAL CO.

MODELS "28", "31" AND "31A" CAR RETARDER

DETAIL PARTS

STYLE "SA-3" ADJUSTABLE SKATE MECHANISM

Order by Plate, Piece, Reference and Abbreviated Description Given in Heavy Face Type Only

PIECE	REF.	DESCRIPTION	DWG. REF.
160871	A	STYLE "SA-3" ADJUSTABLE SKATE OPERATING MECHANISM with Skate, Tie Plates and Bolts (Orders should specify weight and section of rail with which it is to be used).....	D-2341-4
160870	Aa	STYLE "SA-3" ADJUSTABLE SKATE OPERATING MECHANISM with Cylinder, E.P. Valve and D.C. Magnet (Without Skate,Tie Plates and Bolts) for 130# P.S. Rail.....	D-2341-4
172373	Ab	STYLE "SA-3" ADJUSTABLE SKATE OPERATING MECHANISM with Cylinder, E.P. Valve and D.C. Magnet (Without Skate, Tie Plates and Bolts) for 100# A.S.C.E. or 105# D.L.& W. Rails....	D-2341-4
160441	2	BASE.....	D-2413-1
160825	3	BOTTOM PLATE.....	C-9093-19
160846	4	COVER COMPLETE.....	C-9093-20
160474	5	DRIVING ARM.....	C-9093-15
142596	6	OPERATING JAW, R.H.....	C-9093-9
142597	6a	OPERATING JAW, L.H.....	C-9093-10
142595	7	JAW CARRIAGE.....	C-9093-8
	8	SET SCREW, 1/2" x 3" Sq.Hd.Rd.Pt.I. with 1/2" Hex.Jam Nut	
160762	9	PIN, 5/8" x 8-15/16" with two 3/16" x 1-1/8" Cotters and two 5/8" S.Plate Washers.....	B-10216-1
160763	10	PIN, 5/8" x 9-7/16" with two 3/16" x 1-1/8" Cotters.....	B-10216-1
142702	11	PIN, 5/8" x 7-3/4" with two 3/16" x 1-1/8" Cotters.....	8057-201
133179	12	PIN, 5/8" x 10-3/8" with two 3/16" x 1-1/8" Cotters and four Washers Ref.12a.....	B-10216-1
7308	12a	WASHER for Ref.12.....	7826-33
132420	13	ROLLER.....	8072-644
152793	14	BASE SUPPORTING STRAP for 130# P.S.Rail.....	B-12584-9
180182	14a	BASE SUPPORTING STRAP for 100# A.S.C.E. or 105# D.L.& W. Rail.	B-12584-10
	15	BOLT, 1/2" x 2" Hex.Hd. with 1/2" Hex.Nut and 1/2" Plain S. Lock Washer (7/32" x 5/32")	
160639	16	SPRING ROD.....	B-10394-10
160440	17	SPRING.....	7770-451
160641	18	SPRING TUBE TRUNNION.....	C-9093-17

UNION SWITCH & SIGNAL CO.

PIECE	REF.	DESCRIPTION	DWG. REF.
160774	19	SPRING SLEEVE	8072-715
	21	HEX.NUT, 5/8"	
160868	22	SPRING WASHER	8332-81
160648	23	PIPE PLUG	9511-101
132397	24	CYLINDER	12585-3
144993	25	PISTON COMPLETE	12585-12
160431	26	PISTON ROD	8195-72
6946	27	SCREW JAW	7742-11
132398	28	PISTON RETAINER	12585-4
160635	29	REAR HEAD	C-9093-17
	30	TAP BOLT, 5/16" x 5/8" Hex.Hd. with 5/16" Plain S.Lock Washer (5/32" x 3/32")	
160822	31	UPPER STUD with 3/8" Hex.Nuts 5/16" Thick and Hex.Nut Ref.62..	8114-435
160823	32	LOWER STUD with 3/8" Hex.Nuts 5/16" Thick and Hex.Nut Ref.62..	8114-434
	33	WATER PUMP STRAIGHT FITTING with Cap, Alemite Hydraulic Type, 1/8" Pipe Thrd.	
160984	34	VALVE COMPLETE	A-2584-14
480	35	WASHER	8078-1
481	36	WASHER	8078-1
27427	37	WASHER	8078-8
74522	38	YOKE COMPLETE	B-8174-1
75923	39	MAGNET COMPLETE. 400-Ohms	8342-159
16366	40	CAP	C-1992-2
64642	41	SPRING	8735-478
73519	42	ARMATURE with Stem and Nut	8157-27
160903	43	COVER SUPPORTING STUD	8261-152
160757	44	COVER LOCK STAPLE	8191-140
31806	45	PIPE NIPPLE, 1/2" x 2-1/2" Extra Strong Galv.Iron	B-10375-1
	46	UNION, 1/2" Galv.Iron (Brass to Iron Seat)	
	47	BOX CONNECTOR, 3/4" M.I.	
	48	PANEL BOX CONNECTOR, 3/4" M.I.	
	49	LOCK NUT, 3/4"	
146372	50	CONDUIT CLAMP	B-9943-24
	51	LAG SCREW, 1/2" x 3"	
32970	52	STUD, 3/4" x 12" with 3/4" Hex.Nut, 3/4" Plate Washer and 3/4" Lock Washer (5/16" x 7/32") (For 7" x 9" Ties)	8261-87
145608	52a	STUD, 3/4" x 13-1/4" with 3/4" Hex.Nut, 3/4" Plate Washer and 3/4" Lock Washer (5/16" x 7/32") (For 8" x 10" Ties)	8261-142

UNION SWITCH & SIGNAL CO.

PIECE	REF.	DESCRIPTION	DWG. REF.
	53	SKATE (For assemblies and details refer to Plates R-94 and R-94A)	C-9290-
160873	54	R.H. TIE PLATE COMPLETE, 3/8" x 6" x 2'-5" for 130# P.S.Rail	B-8317-127
161766	54a	R.H. TIE PLATE COMPLETE, 3/8" x 6" x 2'-5" for 100# A.S.C.E. Rail	B-8317-128
206996	54b	R.H. TIE PLATE COMPLETE, 3/8" x 6" x 2'-5" for 105# D.L.& W. Rail	B-8317-165
160875	55	L.H. TIE PLATE COMPLETE, 3/8" x 6" x 2'-5" for 130# P.S.Rail	B-8317-127
161768	55a	L.H. TIE PLATE COMPLETE, 3/8" x 6" x 2'-5" for 100# A.S.C.E. Rail	B-8317-128
206998	55b	L.H. TIE PLATE COMPLETE, 3/8" x 6" x 2'-5" for 105# D.L.& W. Rail	B-8317-165
160886	56	HOOK BOLT with 3/4" Hex.Nut, 3/4" S.Plate Washer and 3/4" Lock Washer (5/16" x 7/32") for 130# P.S.Rail	7913-359
161698	56a	HOOK BOLT with 3/4" Hex.Nut, 3/4" S.Plate Washer and 3/4" Lock Washer (5/16" x 7/32") for 100# A.S.C.E.Rail	7913-361
207000	56b	HOOK BOLT with 3/4" Hex.Nut, 3/4" S.Plate Washer and 3/4" Lock Washer (5/16" x 7/32") for 105# D.L.& W.Rail	7913-386
160755	57	SPACER for 130# P.S.Rail	C-9093-14
161699	57a	SPACER for 100# A.S.C.E.Rail	C-9093-14
206994	57b	SPACER for 105# D.L.& W. Rail	C-9093-14
	58	TAP BOLT, 1/2" x 2-7/8" Hex.Hd. with 1/2" Pl.S.Lock Washer (7/32" x 5/32") for 130# P.S.Rail	
	58a	TAP BOLT, 1/2" x 2-1/4" Hex.Hd. with 1/2" Pl.S.Lock Washer (7/32" x 5/32") for 100# A.S.C.E. or 105# D.L.& W. Rails	
186914	59	ADJUSTING GAUGE COMPLETE	C-9067-2
210310	60	SHIM	7826-297
	61	SET SCREW, 1/2"-13 x 2-1/2" Sq.Hd.Rd.Pt.I. with 1/2" Hex.Jam Nut	
51374	62	3/8" Hex.Nut	8265-153
	63	1/8" C.I. BLACK PIPE PLUG	
133775	64	DIAPHRAGM COMPLETE	10933-44
133773	65	ADJUSTMENT SCREW	8098-425
	66	3/4" HEX.NUT	

PLATE R-92

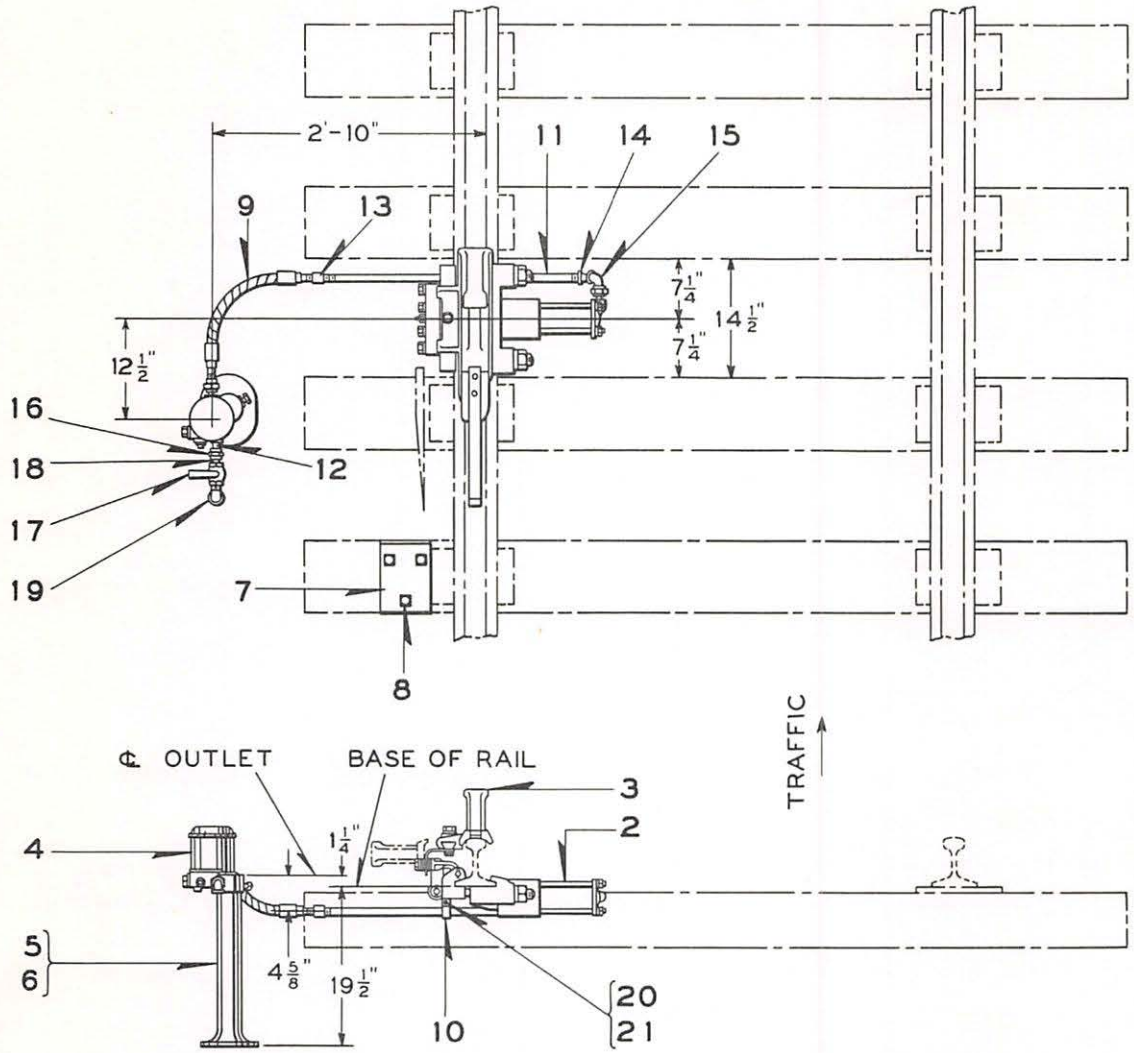

A

LAYOUT OF STYLE "SA-10" SKATE OPERATING MECHANISM

8-5-43

UNION SWITCH & SIGNAL CO.

CAR RETARDER

DETAIL PARTS

LAYOUT OF STYLE "SA-10" SKATE OPERATING MECHANISM

Order by Plate, Piece, Reference and Abbreviated Description Given in Heavy Face Type Only

STYLE "SA-10" SKATE OPERATING MECHANISM WITH VALVE AND 3 in. DIAMETER CYLINDER				
PIECE	REF.	SUITABLE FOR RAIL SECTION	SKATE MECHANISM REF. , PLATE R-98	DWG.REF.
218377	A	90# ARA-A	B	C-16758-1
216566	Aa	100# AREA and 100# ARA-A	Ba	C-16758-1
231140	Ab	130# P.S.	Bb	C-16758-1

PIECE	REF.	DESCRIPTION	DWG.REF.
	2	SKATE MECHANISM COMPLETE. When ordering assemblies or details refer to Plate R-98	C-16755-1
216495	3	SKATE COMPLETE	C-9290-10
216560	4	VALVE COMPLETE. For details see Plate R-98	C-16756-7
212978	5	POST	C-16756-5
217631	6	SEALING WASHER	8065-228
216564	7	FOOT GUARD	9999-1617
	8	LAG SCREW, 1/2 in. x 4 in.	
77860	9	HOSE CONNECTION	B-9046-4
218376	10	PIPE SUPPORT	B-9943-45
217632	11	PIPE	B-10919-4
31814	12	PIPE NIPPLE, 1/2 in. x 2 in. Galv.	B-10375-1
C.N.32174	13	PIPE COUPLING, 1/2 in. M.I.Galv.	
C.N.32481	14	STREET ELL, 1/2 in.-45° M.I.Galv.	
C.N.33584	15	MALE R.R. UNION ELL, 1/2 in. M.I.Galv.	
C.N.33596	16	MALE AND FEMALE R.R. UNION ELL, 1/2 in. M.I.Galv.	
C.N.32151	17	3/4 in. SQUARE HEAD COCK	
C.N.32030	18	REDUCING BUSHING, 3/4 in. x 1/2 in. M.I.Galv.	

8-5-43

UNION SWITCH & SIGNAL CO.

PIECE	REF.	DESCRIPTION	DWG. REF.
C.N.32483	19	STREET ELL, 3/4 in. M.I.Galv.	
	20	BOLT, 3/8 in. x 1-1/4 in. Sq.Hd.S. (Cad.Pl.) with 3/8 in. Pl.S. Lock Washer (11/64 in. x 7/64 in.) (Cad.Pl.) and 3/8 in. Hex.Nut (Cad.Pl.)	
	21	BOLT, 3/8 in. x 2-1/4 in. Sq.Hd.S. (Cad.Pl.) with 3/8 in. Pl.S. Lock Washer (11/64 in. x 7/64 in.) (Cad.Pl.) and 3/8 in. Hex.Nut (Cad.Pl.)	

8-5-43

PLATE R-98

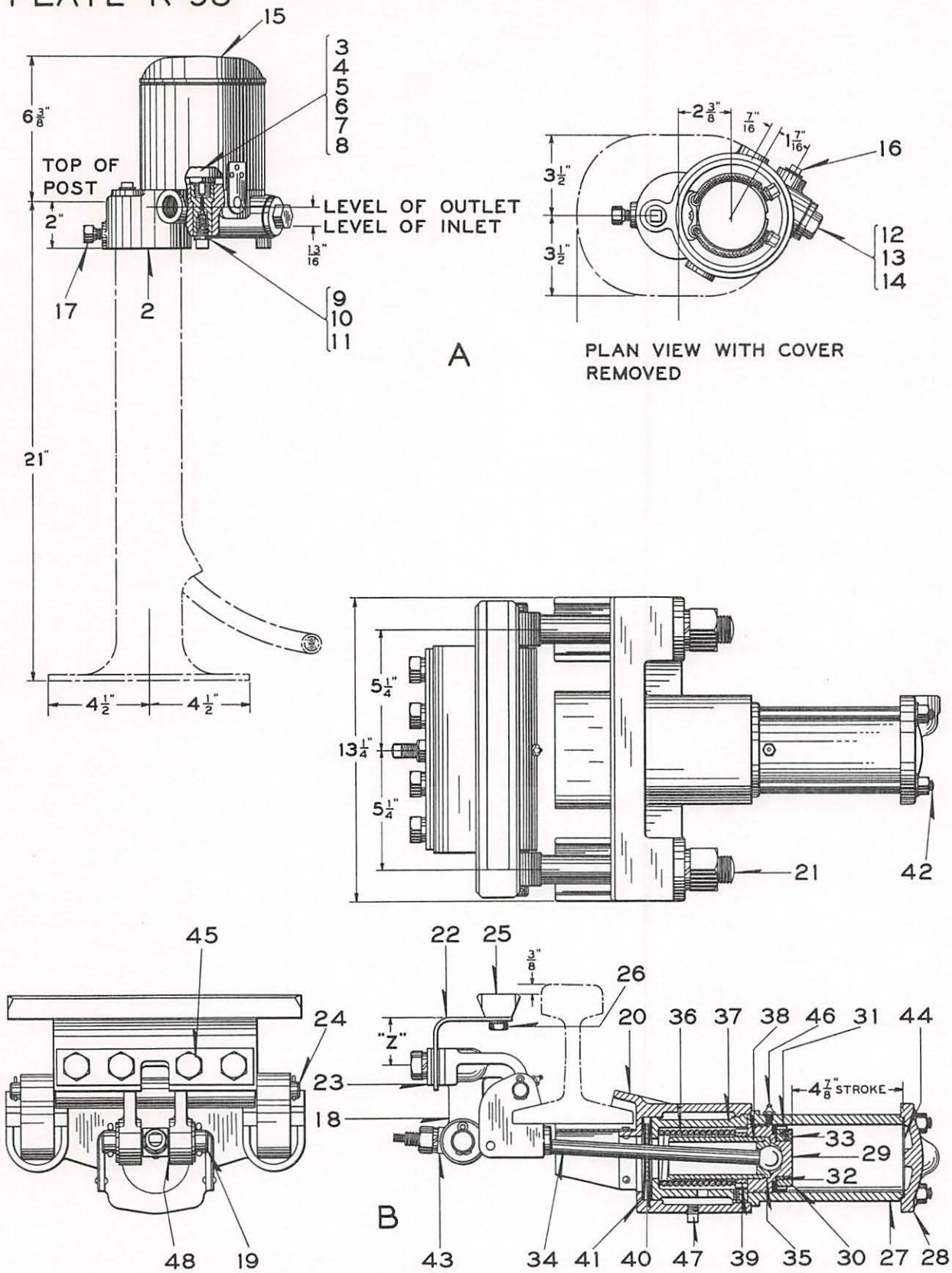

STYLE "SA-10" SKATE OPERATING MECHANISM AND MAGNET AND VALVE

8-5-43

UNION SWITCH & SIGNAL CO.

CAR RETARDER

DETAIL PARTS

STYLE "SA-10" SKATE OPERATING MECHANISM AND MAGNET AND VALVE

Order by Plate, Piece, Reference and Abbreviated Description Given in Heavy Face Type Only

PIECE	REF.	DESCRIPTION	DWG. REF.
216560	A	MAGNET AND VALVE COMPLETE for Style "SA-10" Skate Operating Mechanism	C-16756-7

STYLE "SA-10" SKATE OPERATING MECHANISM COMPLETE WITH PISTON AND 3 in. CYLINDER

PIECE	REF.	SUITABLE FOR RAIL SECTION	SKATE SUPPORT SPRING	"Z" DIM.	DWG.REF.
218305	B	90# ARA-A	Ref.22	1-3/4 in.	C-16755-1
216562	Ba	100# AREA and 100# ARA-A	Ref.22a	2-1/8 in.	C-16755-1
231139	Bb	130# P.S.	Ref.22b	2-5/8 in.	C-16755-1

PIECE	REF.	DESCRIPTION	DWG.REF.
216558	2	VALVE BODY COMPLETE	C-16756-6
73385	3	MAGNET COMPLETE (130-Ohms)	8342-159
75967	4	MAGNET CAP	C-1992-9
1707	5	ARMATURE	8157-27
1711	6	ARMATURE STEM	B-9595-1
1509	7	NUT	8109-15
64642	8	SPRING	8735-478
216559	9	PIN VALVE	7625-38
3102	10	SPRING	7625-5
6369	11	PLUG	9511-33
158003	12	PLUG	9511-106
161231	13	GASKET	8078-1483
161234	14	STRAINER COMPLETE	B-10656-16
194044	15	MAGNET COVER COMPLETE	C-9295-6
	16	PIPE PLUG, 1/2 in. Steel	
	17	CAP SCREW, 1/2 in.-13 x 1 in. Hex.Hd. (Cad.Pl.)	
216442	18	OPERATING ARM COMPLETE	C-16756-3

UNION SWITCH & SIGNAL CO.

PIECE	REF.	DESCRIPTION	DWG. REF.
	19	PIN Ref.19a with two Washers Ref.19b and two 1/4 in. x 1-1/2 in. S. Cotters (Tin Pl.)	8066-97
216493	19a	PIN ONLY	8066-97
109015	19b	WASHER	7826-9
216445	20	MOUNTING BRACKET COMPLETE	C-16756-4
	21	HOOK BOLT Ref.21a with 1-1/4 in. Hex.Nut and 1-1/4 in. Pl. S. Lock Washer (7/16 in. x 1/4 in.) (Cad.Pl.)	7913-395
216443	21a	HOOK BOLT ONLY	7913-395
218304	22	SKATE SUPPORT SPRING for Ref.B	C-16756-2
216490	22a	SKATE SUPPORT SPRING for Ref.Ba	C-16756-2
231138	22b	SKATE SUPPORT SPRING for Ref.Bb	C-16756-2
216447	23	SPACER, 1/16 in. thick	C-16756-2
216448	23a	SPACER, 1/8 in. thick	C-16756-2
216449	23b	SPACER, 3/16 in. thick	C-16756-2
216450	23c	SPACER, 1/4 in. thick	C-16756-2
	24	SHAFT Ref.24a with two 3/16 in. x 1-1/8 in. S.Cotters (Cad.Pl.)	12501-149
216440	24a	SHAFT ONLY	12501-149
216485	25	SKATE SUPPORT	C-16756-1
	26	TAP BOLT, 1/2 in. x 3/4 in. Hex.Hd.S. (Cad.Pl.) with 1/2 in. Pl.S. Lock Washer (7/32 in. x 5/32 in.) (Cad.Pl.)	
216530	27	CYLINDER (3 in. diameter)	8194-40
212595	28	CYLINDER HEAD	B-8422-22
216561	29	3 in. PISTON COMPLETE (Inc. 1-29a, 1-30, 1-31, 1-32 and 1-33)	8328-155
216524	29a	3 in. PISTON ONLY	8328-154
138505	30	PISTON PACKING RING	8082-179
187510	31	PACKING	12613-6
222495	32	PACKING WASHER	8332-105
	33	MACHINE SCREW, NO.10-30 x 3/8 in. Flat Hd.S. (Tin Pl.)	
	34	PISTON ROD with Nut, Washer and Separator (Inc.1-34a, 1-43, one 5/8 in. Hex.Nut (Cad.Pl.) and one 5/8 in. Pl.S.Lock Washer (5/16 in. x 11/32 in.) (Cad.Pl.)	8195-100
216506	34a	PISTON ROD ONLY	8195-100
216521	35	PISTON ROD RETAINER	12487-3
216522	36	PISTON RETURN SPRING	7770-578
216529	37	SPRING SOCKET COMPLETE (Inc.1-37a and 1-37b)	8084-89

UNION SWITCH & SIGNAL CO.

PIECE	REF.	DESCRIPTION	DWG. REF.
212593	37a	SPRING SOCKET ONLY	8084-89
	37b	MACHINE SCREW, NO.10-30 x 3/8 in. Flat Fil.Hd.S.	
216523	38	SPRING GUIDE	8420-45
216520	39	LOCK NUT	8265-370
216528	40	SEALING WASHER	7828-418
216527	41	SEALING PLATE	11893-916
	42	STUD Ref.42a with 1/2 in. Hex.Nut (Cad.Pl.)	8115-203
216525	42a	STUD ONLY	8115-203
216494	43	SEPARATOR	8072-897
218378	44	GASKET	8078-1483
	45	TAP BOLT, 3/4 in. x 2 in. Hex.Hd.S. (Cad.Pl.) with 3/4 in. Pl.S.Lock Washer (5/16 in. x 7/32 in.) (Cad.Pl.)	
C.N.39137	46	LUBRICATING FITTING, 1/8 in. P.T.	
	47	PIPE PLUG, 1/4 in. Steel	
216556	48	BUSHING	8350-953

PLATE R-101

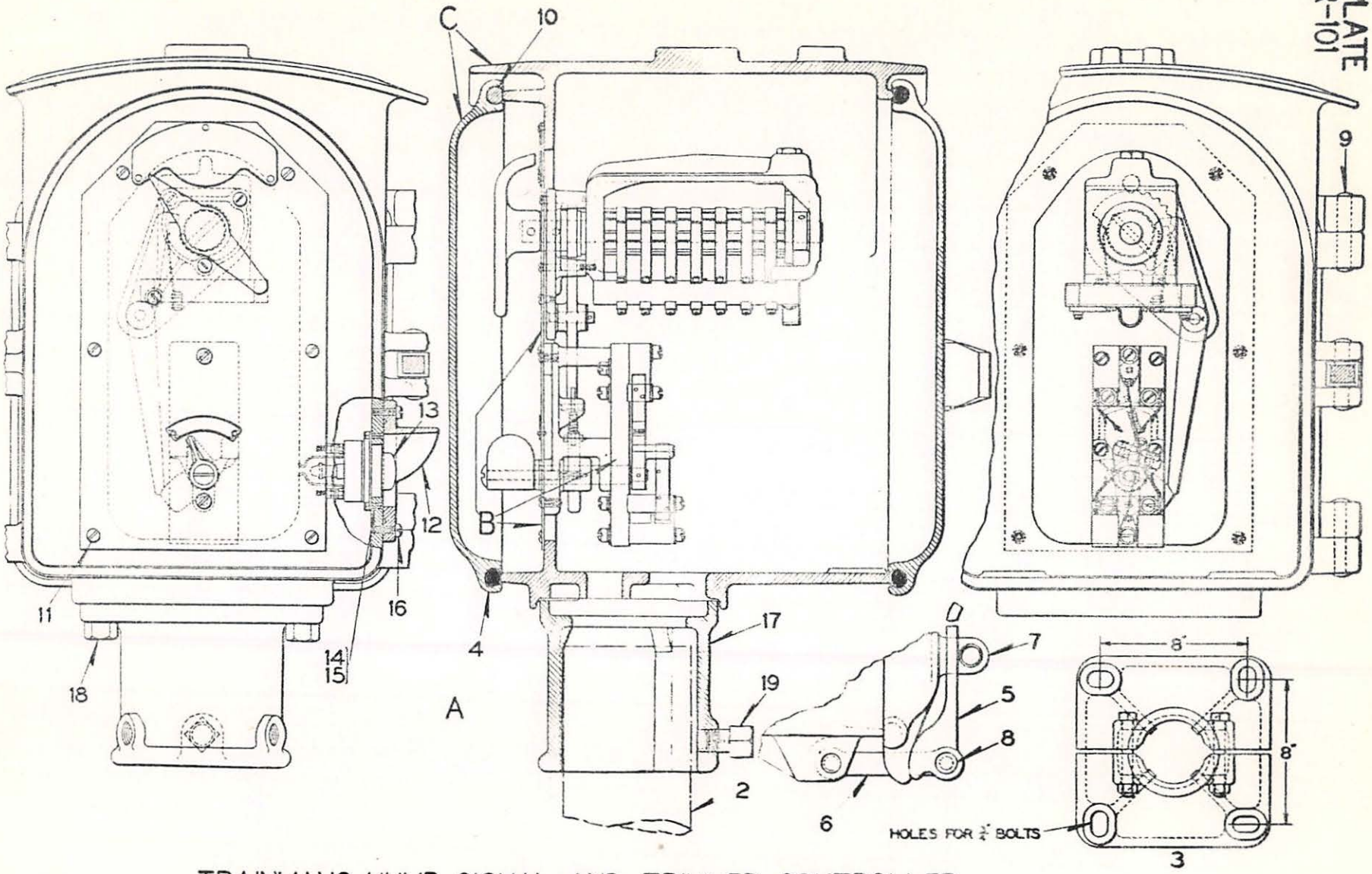

TRAINMANS HUMP SIGNAL AND TRIMMER CONTROLLER

UNION SWITCH & SIGNAL CO.

MODELS "28", "31" AND "31A" CAR RETARDER

DETAIL PARTS

TRAINMANS HUMP SIGNAL AND TRIMMER CONTROLLER

Order by Plate, Piece, Reference and Abbreviated Description Given in Heavy Face Type Only

TRAINMANS HUMP SIGNAL AND TRIMMER CONTROLLER WITH LOCKING LEVER (WITHOUT FOUNDATION BOLTS) Dwg.D-2345-3

PIECE	REF.	CONTROL UNIT REF.	PUSH BUTTON REF.	CASE AND DOOR REF.	PIPE POST AND BASE REF.
168159	A	B	13	C	Without
	Aa	B	13	C	2 and 3
176931	Ab	Ba	13	C	Without
	Ac	Ba	13	C	2 and 3
207181	Ad	Bb	13	C	Without
	Ae	Bb	13	C	2 and 3
210737	Af	Bc	Without	Cb	Without
	Ag	Bc	Without	Cb	2 and 3

PIECE	REF.	DESCRIPTION	DWG.REF.
167939	B	HUMP AND TRIMMER CONTROL UNIT (5-Pos.) with Lock Lever, for Ref.A, (For details refer to Plate R-103)	C-9074-7
176932	Ba	HUMP AND TRIMMER CONTROL UNIT (5-Pos.) with Lock Lever, for Ref.Ab (For details refer to Plate R-103)	C-9074-7
207180	Bb	HUMP AND TRIMMER CONTROL UNIT (4-Pos.) with Lock Lever, for Ref.Ad (For details refer to Plate R-103)	C-9074-7
210735	Bc	HUMP AND TRIMMER CONTROL UNIT (3-Pos.) with Lock Lever, for Ref.Af (For details refer to Plate R-103)	C-9074-7
168158	C	CASE WITH DOORS, STAPLES, PINS AND GASKET (Inc.1-Ca, 2-4, 2-5, 2-6, 2-7, 4-8, 4-9 and 2-10)(Arranged for Push Button)	D-2345-3
167802	Ca	CASE ONLY (Arranged for Push Button)	C-9102-5
210736	Cb	CASE WITH DOORS, STAPLES, PINS AND GASKETS (Inc.1-Cc, 2-4, 2-5, 2-6, 2-7, 4-8, 4-9 and 2-10) (Not arranged for Push Button)	D-2345-3
210734	Cc	CASE ONLY, (Not arranged for Push Button)	C-9102-5
64196	2	3" PIPE POST, 3'-0" LONG, for Refs.Aa, Ac, Ae and Ag	B-10920-4
127271	3	CLAMP BASE for 3" Pipe	C-6634-4
43581	4	DOOR	C-8118-2
54955	5	HASP	8299-62
46796	6	LINK	C-8079-6

UNION SWITCH & SIGNAL CO.

PIECE	REF.	DESCRIPTION	DWG. REF.
903	7	STAPLE	8191-1
209198	8	PIN	B-10207-1
209199	9	PIN	B-10207-1
	10	JUTE PACKING, 3/8" x 3/8" x 3'-5-1/4"	
	11	MACHINE SCREW, NO.10-30 x 3/8" Oval Csk.Hd. (Tin Pl.)	
172275	12	HOOD	C-8964-22
161007	13	PUSH BUTTON (Normally Open)	B-9918-38
	14	MACHINE SCREW, NO.8-36 x 5/8" Flat Hd.S. (Tin Pl.) with Nut Ref.15	
32498	15	NUT	8109-223
	16	MACHINE SCREW, NO.10-30 x 5/8" Fil.Hd.S. (Tin Pl.)	
133463	17	SOCKET	C-9102-2
	18	TAP BOLT, 1/2"-13 x 1-1/2" Hex.Hd. (Cad.Pl.)	
	19	SET SCREW, 5/8" x 1" Cupped Point Sq.Hd.I.	

2-25-38

PLATE R-101A

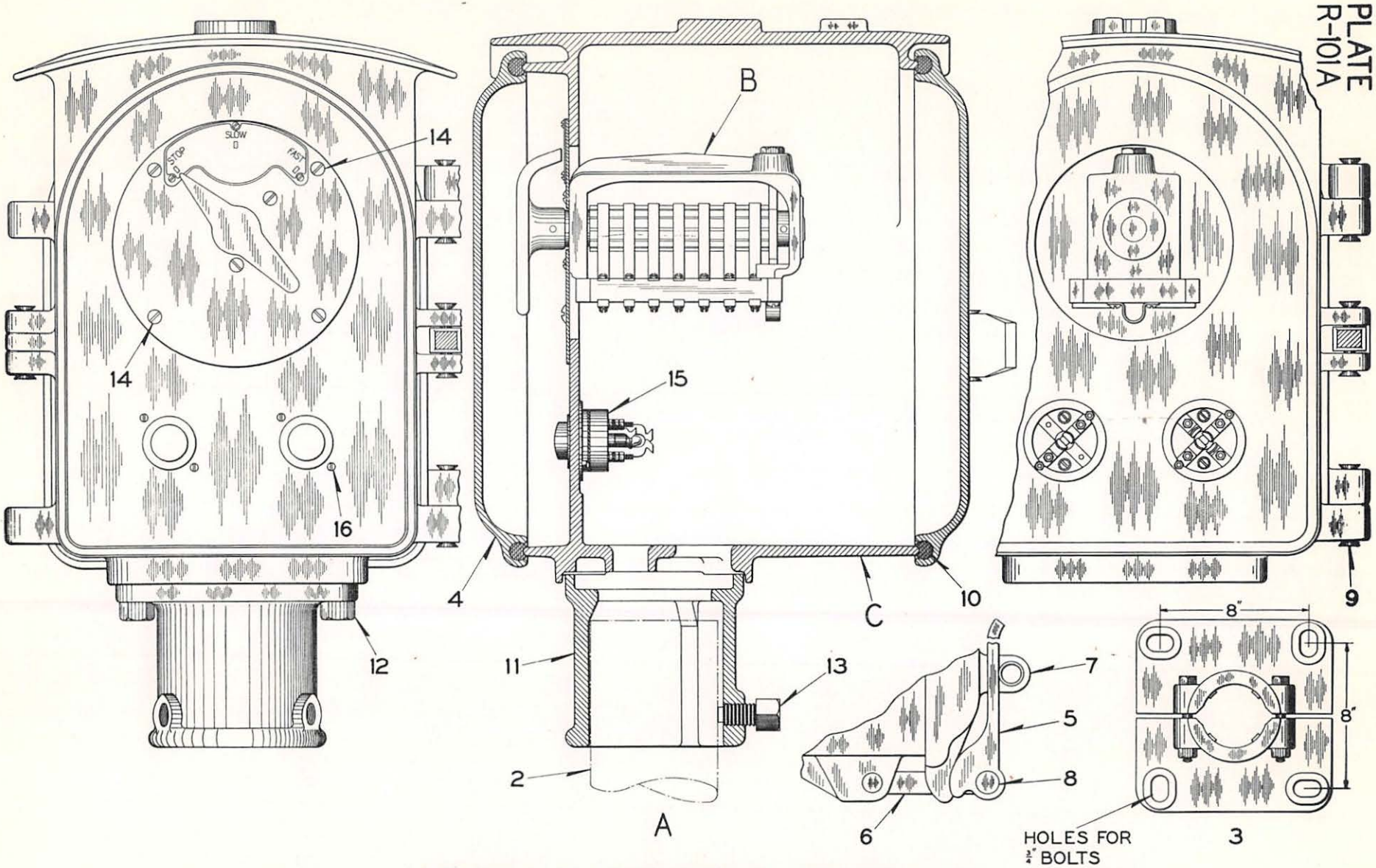

TRAINMANS HUMP SIGNAL CONTROLLER

UNION SWITCH & SIGNAL CO.

MODELS "28", "31" AND "31A" CAR RETARDER

DETAIL PARTS

TRAINMANS HUMP SIGNAL CONTROLLER

Order by Plate, Piece, Reference and Abbreviated Description Given in Heavy Face Type Only

TRAINMANS HUMP SIGNAL CONTROLLER (Without Foundation Bolts)
Dwg.D-2345-2

PIECE	REF.	CONTROL UNIT REF.	PUSH BUTTONS "Y"	PUSH BUTTONS "Z"	CASE AND DOOR REF.	PIPE POST AND BASE REF.
209354	A	B	Ref.15	Ref.15	C	Without
	Aa	B	Ref.15	Ref.15	C	2 and 3
163423	Ab	Ba	Without	Without	Cb	Without
	Ac	Ba	Without	Without	Cb	2 and 3

PIECE	REF.	DESCRIPTION	DWG.REF.
209353	B	CONTROL UNIT for Trainmans Hump Signal Controller, for Ref.A (For details refer to Plate R-102).....	C-9074-5
163422	Ba	CONTROL UNIT for Trainmans Hump Signal Controller, for Ref.Ab (For details refer to Plate R-102).....	C-9074-5
160965	C	CASE WITH DOORS, HASPS, STAPLES, PINS AND GASKETS (Inc.1-Ca, 2-4, 2-5, 2-6, 2-7, 4-8, 4-9 and 2-10)(Arranged for Push Buttons).....	D-2345-2
160963	Ca	CASE ONLY (Arranged for Push Buttons).....	C-9102-3
161760	Cb	CASE WITH DOORS, HASPS, STAPLES, PINS AND GASKETS (Inc.1-Cc, 2-4, 2-5, 2-6, 2-7, 4-8, 4-9 and 2-10)(Not arranged for Push Buttons).....	D-2345-2
161759	Cc	CASE ONLY (Not arranged for Push Buttons).....	C-9102-3
64196	2	3" PIPE POST, 3'-0" LONG, for Refs.Aa and Ac.....	B-10920-4
127271	3	CLAMP BASE for 3" Pipe.....	C-6634-4
43581	4	DOOR.....	C-8118-2
54955	5	HASP.....	8299-62
46796	6	LINK.....	C-8079-6
903	7	STAPLE.....	8191-1
209198	8	PIN.....	B-10207-1
209199	9	PIN.....	B-10207-1
	10	JUTE PACKING, 3/8" x 3/8" x 3'-5-1/4"	
133463	11	SOCKET.....	C-9102-2
	12	TAP BOLT, 1/2"-13 x 1-1/2" Hex.Hd. (Cad.Pl.)	
	13	SET SCREW, 5/8" x 1" Cupped Pt.Sq.Hd.I.	

2-25-38

UNION SWITCH & SIGNAL CO.

PIECE	REF.	DESCRIPTION	DWG. REF.
	14	MACHINE SCREW, NO.10-30 x 3/8" Rd.Hd.S. (Tin Pl.)	
161007	15	PUSH BUTTON COMPLETE (Normally Open).....	B-9918-38
	16	MACHINE SCREW, NO.8-36 x 1/2" Flat Hd.S.(Tin Pl.) with Nut Ref.16a	
32498	16a	NUT.....	8109-223

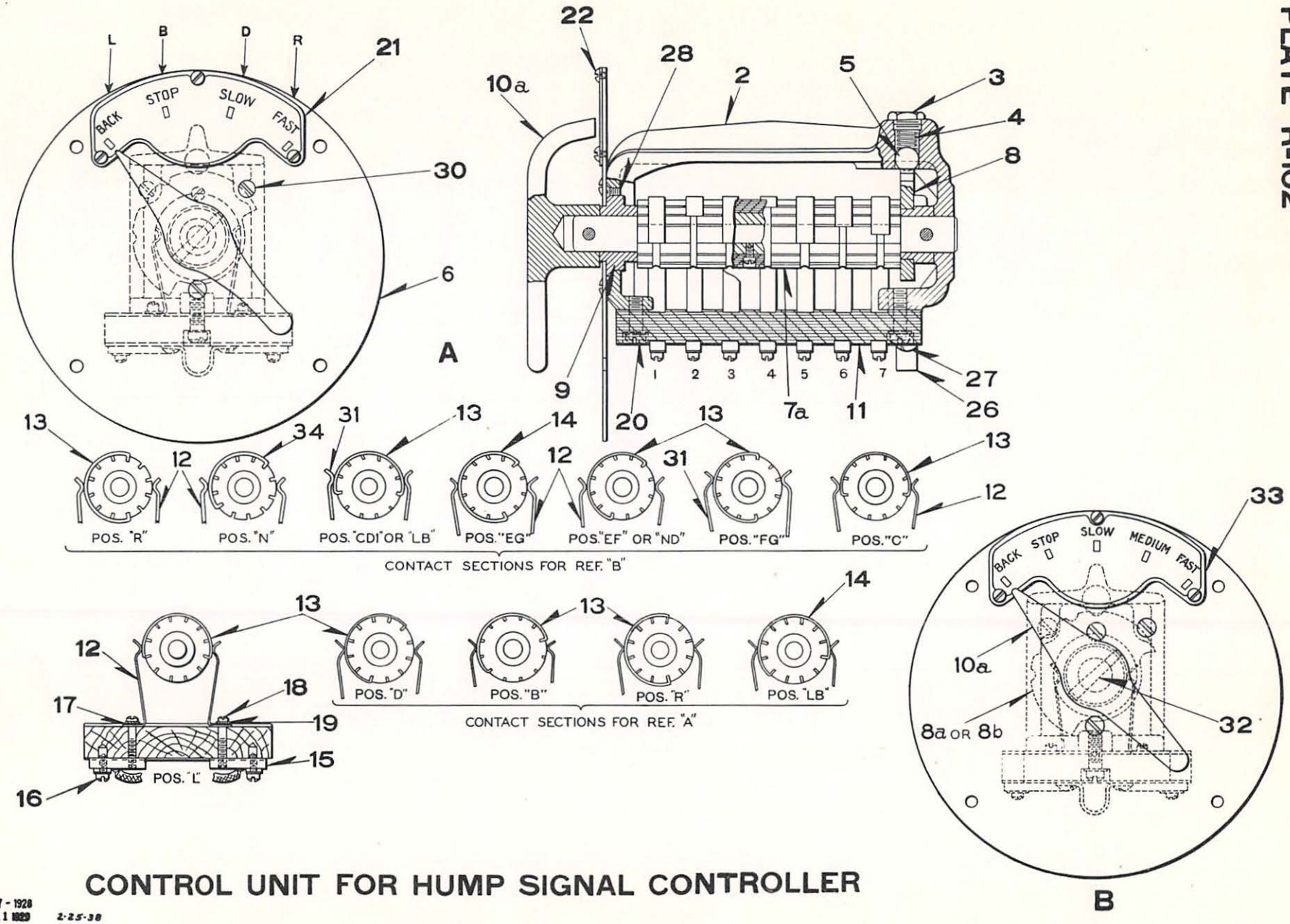

CONTROL UNIT FOR HUMP SIGNAL CONTROLLER

APR. 7 - 1928
MAY 11 1929 2-25-38

UNION SWITCH & SIGNAL CO.

CAR RETARDERS

DETAIL PARTS

CONTROL UNIT FOR TRAINMANS HUMP SIGNAL CONTROLLER

Order by Plate, Piece, Reference and Abbreviated Description Given in Heavy Face Type Only

PIECE	REF.	DESCRIPTION	DWG. REF.
133460	A	CONTROL UNIT, (4-Position) with Contacts in spaces 1 and 5 per dia. "L", space 2 "D", space 3 "LB", space 4 "R" and space 6 "B", for Trainmans Hump Signal Controller.....	C-9074-2

CONTROL UNIT FOR TRAINMANS HUMP SIGNAL CONTROLLER

PIECE	REF.	CONTACTS IN SECTIONS							REMARKS	POS.	DWG.REF.
		1	2	3	4	5	6	7			
155361	B	CDI	EG	EF	FG	EG	C	CDI	With Name Plate Ref.33	5	C-9074-5
209353	Ba	N	N	R	R	--	-	---	With Name Plate Ref.33a	3	C-9074-5
163422	Bb	LB	ND	R	--	--	-	---	With Name Plate Ref.33a	3	C-9074-5

PIECE	REF.	DESCRIPTION	DWG.REF.
132119	2	BRACKET.....	C-9088-1
133034	3	PLUG.....	9511-83
134298	4	COIL SPRING.....	7770-288
	5	BALL 7/16" O.D. Carbon Steel	
133468	6	PLATE.....	11893-272
132131	7	ROLLER, complete for Ref.A (used previous to 4-1-30)(arranged for set screw) Not Shown.....	8435-173
155003	7a	ROLLER, complete for Refs. A, B, Ba and Bb (as shown).....	8435-182
	8	RATCHET, complete with Taper Pin Ref.32 for Ref.A.....	9121-130
155366	8a	RATCHET, complete for Refs.B and Bb.....	9121-130
209352	8b	RATCHET, complete for Ref.Ba.....	9121-176
132151	9	BUSHING.....	8350-676
	10	HANDLE COMPLETE WITH TAPER PIN Ref.32 for Ref.A (Interchangeable with Clamp Type of handle furnished previous to 4-1-30) (Not shown).....	8311-87
154999	10a	HANDLE for Refs.A, B, Ba and Bb (Without Taper Pin).....	8311-87
132141	11	CONTACT SPRING BOARD.....	9968-709
31500	12	CONTACT SPRING(Stamped #12).....	10913-4
37098	13	CONTACT BAND(210° for 1-1/4" Roller).....	10913-37
37101	14	CONTACT BAND(240° for 1-1/4" Roller).....	10913-37
132810	15	TERMINAL CONNECTOR.....	8064-583
	16	MACHINE SCREW NO.6-40 x 3/8" Fil.Hd.Br. (Nickel Plated) with Washer Ref.16a	

UNION SWITCH & SIGNAL CO.

PIECE	REF.	DESCRIPTION	DWG. REF.
20686	16a	WASHER ONLY for Ref.16	7828-108
49031	17	WASHER	7828-214
	18	MACHINE SCREW NO.6-40 x 3/4" Fil.Hd.Br. (Nickel Plated)	
41052	19	TERMINAL CONNECTOR 1" long for Ref.A (Used between spaces 1 and 2)	8762-69
	20	MACHINE SCREW NO.14-24 x 5/8" Fil.Hd.Bz. (Nickel Plated),with Washer Ref.20a	
84	20a	WASHER ONLY for Ref.20	7828-6
133499	21	NAME PLATE for Ref.A (Lettered as shown)	8286-97
	22	MACHINE SCREW NO.4-48 x 3/16" Rd.Hd.Br. (Nickel Plated)	
132683	26	CLAMP	11893-264
	27	WOOD SCREW NO.8 x 1/2" Rd.Hd.S. (Tin Pl.)	
	28	MACHINE SCREW NO.6-40 x 1/4" Flat Hd.S.	
	30	MACHINE SCREW NO.10-30 x 1/2" Oval Csk.Hd.S.	
32178	31	CONTACT SPRING(Stamped #16)	10913-4
	32	PIN #2 x 1-1/4" Taper	
155363	33	NAME PLATE for Ref.B (Lettered as shown)	8286-107
159040	33a	NAME PLATE for Refs.Ba and Bb (Lettered "Stop", "Slow", "Fast")	8286-115
37096	34	CONTACT BAND(180° for 1-1/4" Roller)	10913-37

2-25-38

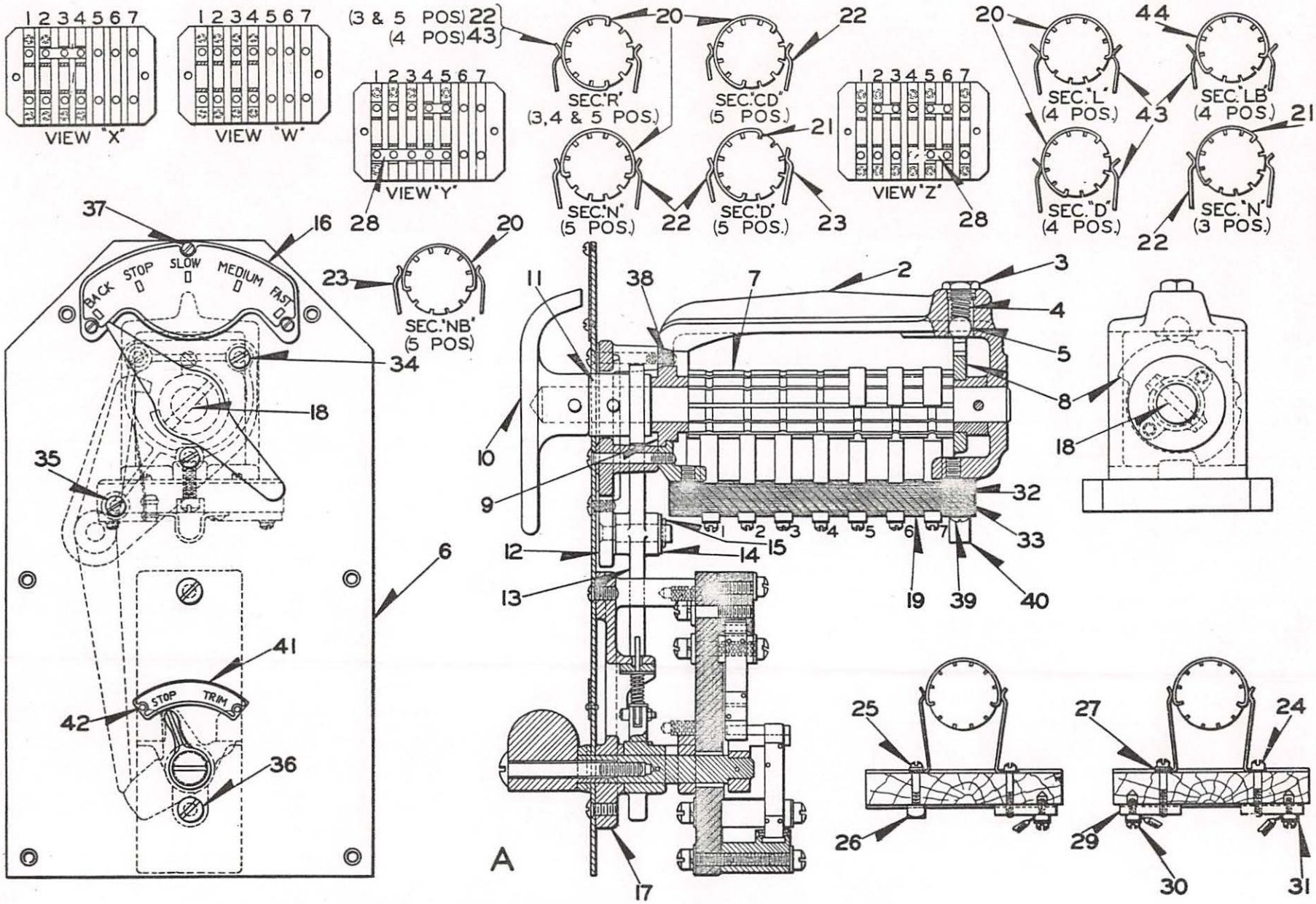

HUMP AND TRIMMER CONTROL UNIT

UNION SWITCH & SIGNAL

MODELS "28", "31" AND "31A" CAR RETARDER

DETAIL PARTS

HUMP AND TRIMMER CONTROL UNIT

Order by Plate, Piece, Reference and Abbreviated Description Given in Heavy Face Type Only

HUMP AND TRIMMER CONTROL UNIT WITH LOCK LEVER FOR TRAINMANS HUMP SIGNAL CONTROLLER

PIECE	REF.	CONTACTS IN SECTIONS 1	2	3	4	5	6	7	REMARKS	POS.	DWG.REF.
167739	A	R	CD	N	D	NB	-	-	Terminal Board per View "Y"	5	C-9074-7
176932	Aa	CD	CD	R	R	N	D	R	Terminal Board per View "Z"	5	C-9074-7
207180	Ab	L	LB	D	R	--	-	-	Terminal Board per View "X"	4	C-9074-7
210735	Ac	N	N	R	R	--	-	-	Terminal Board per View "W"	3	C-9074-7

PIECE	REF.	DESCRIPTION	DWG.REF.
132119	2	BRACKET	C-9088-1
133034	3	PLUG	9511-83
134298	4	SPRING	7770-288
	5	7/16" O.D. CARBON STEEL BALL	
167793	6	FRONT PLATE	C-9102-4
167713	7	ROLLER without Contact Bands	8435-190
155366	8	RATCHET COMPLETE with Cam and Machine Screw for Refs.A and Aa.	9121-130
155365	8a	CAM for Ref.8	9121-130
152367	8b	CLAMP BUSHING for Refs.8, 8d and 8e	8092-66
	8c	MACHINE SCREW, NO.10-30 x 1/2" Flat Hd.S. for Refs.8, 8d and 8e	
166097	8d	RATCHET COMPLETE with Cam and Machine Screw, for Ref.Ab	9121-138
209352	8e	RATCHET COMPLETE with Cam and Machine Screw, for Ref.Ac	9121-176
166096	8f	CAM for Ref.8d	9121-138
209351	8g	CAM for Ref.8e	9121-176
132151	9	BUSHING	8350-676
154999	10	HANDLE	8311-87
167744	11	CAM	9121-143
167748	12	BRACKET COMPLETE with Stud, Spring and Rivets	C-9102-4
167747	12a	BRACKET ONLY	C-9102-4
167746	12b	STUD	8114-314
167745	12c	SPRING	8735-718

UNION SWITCH & SIGNAL

PIECE	REF.	DESCRIPTION	DWG. REF.
37417	12d	RIVET	10301-21
167690	13	LOCKING LEVER	8236-33
74918	14	WASHER	7826-83
	15	COTTER, 3/32" x 3/4" (Tin Pl.)	
155363	16	NUMBER PLATE for Refs.A and Aa (Lettered "Back", "Stop","Slow", "Medium", "Fast")	8286-107
133499	16a	NUMBER PLATE for Ref.Ab (Lettered "Back", "Stop", "Slow", "Fast")	8286-97
159040	16b	NUMBER PLATE for Ref.Ac (Lettered "Stop", "Slow", "Fast")	8286-115
172219	17	TRIMMER CONTROLLER COMPLETE (For details refer to Plate R-11).	C-9089-2
	18	TAPER PIN, NO.2 x 1-1/4"	
132141	19	CONTACT SPRING BOARD	9968-709
37098	20	CONTACT BAND(210° for 1-1/4" Roller)	10913-37
37096	21	CONTACT BAND(180° for 1-1/4" Roller)	10913-37
31500	22	CONTACT SPRING(Stamped #12)	10913-4
32178	23	CONTACT SPRING(Stamped #16)	10913-4
	24	MACHINE SCREW, NO.6-40 x 3/4" Fil.Hd.Br. (N.P.)	
49871	25	SCREW	8098-881
61147	26	NUT	8109-346
49031	27	WASHER	7828-214
41052	28	CONNECTOR 6-1/2" Long (Cut to suit)	8762-69
132810	29	TERMINAL CONNECTOR	8064-583
	30	MACHINE SCREW, NO.6-40 x 3/8" Fil.Hd.Br. (N.P.)	
20686	31	WASHER	7828-108
	32	MACHINE SCREW, NO.14-24 x 5/8" Fil.Hd.Bz. (N.P.)	
84	33	WASHER	7828-[illegible]
	34	MACHINE SCREW, NO.10-30 x 1-1/2" Oval Csk.Hd.S.	
	35	MACHINE SCREW, NO.10-30 x 3/8" Oval Csk.Hd.S	
	36	MACHINE SCREW, NO.14-24 x 1/2" Oval Csk.Hd.S.	
	37	MACHINE SCREW, NO.4-48 x 1/8" Rd.Hd.Br. (N.P.)	
	38	MACHINE SCREW, NO.6-40 x 1/4" Flat Hd.S.	
	39	WOOD SCREW, NO.8 x 1/2" Rd.Hd.S. (Tin Pl.)	
132683	40	CLAMP	11893-264
168395	41	NUMBER PLATE	8286-120
54920	42	RIVET	10301-1
50181	43	CONTACT SPRING(Stamped #7)	10913-4
37101	44	CONTACT BAND(240° for 1-1/4" Roller)	10913-37

PLATE R-105

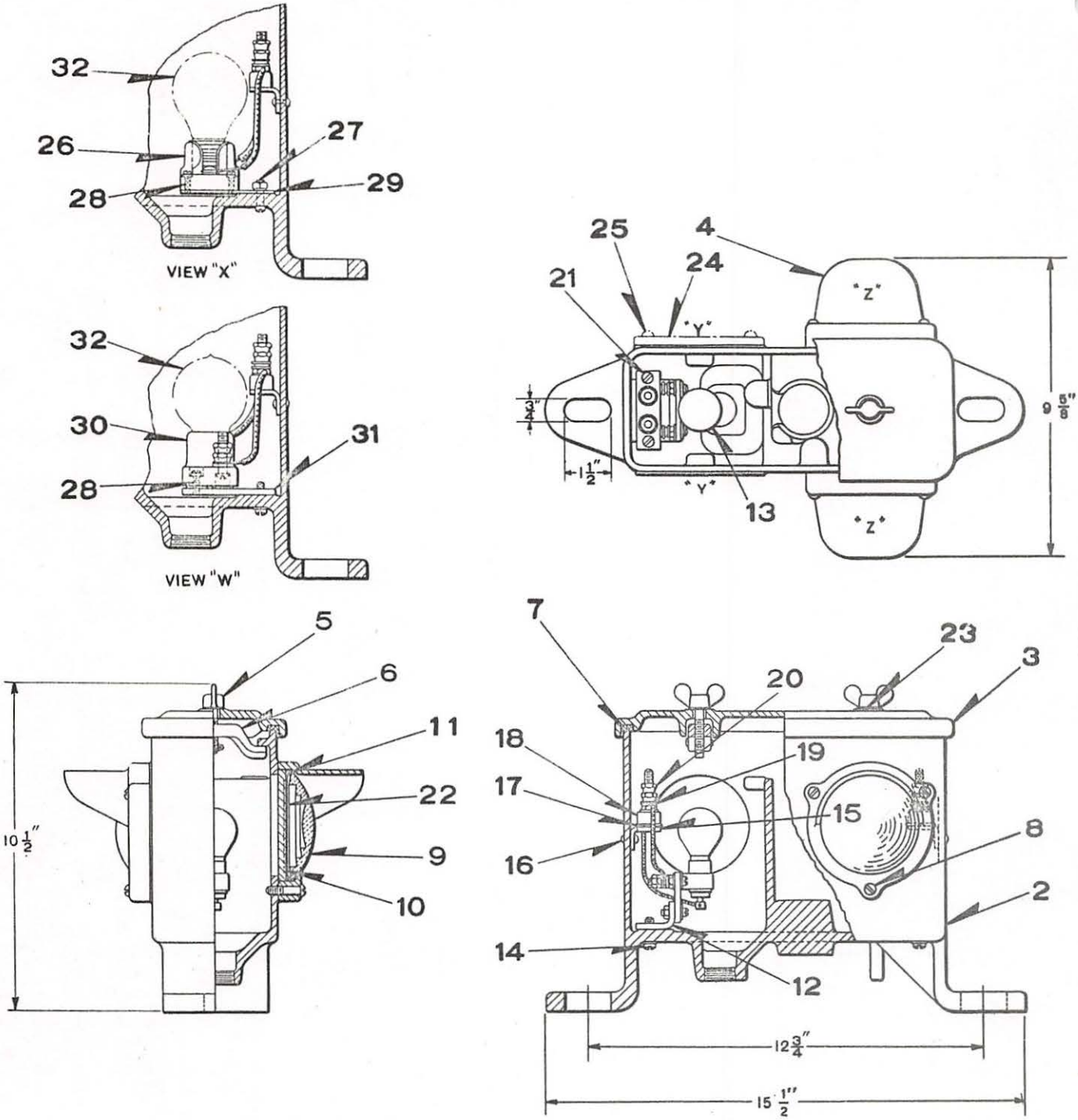

A

STYLE ES-20 SWITCH LAMP

UNION SWITCH & SIGNAL

MODELS "28", "31" AND "31A" CAR RETARDER

DETAIL PARTS

STYLE "ES-20" COLOR LIGHT ELECTRIC SWITCH LAMPS

Order by Plate, Piece, Reference and Abbreviated Description Given in Heavy Face Type Only

STYLE "ES-20" ELECTRIC SWITCH LAMP (WITH BULBS)

PIECE	REF.	ROUNDELS "Y" COLOR	ROUNDELS "Y" REF.	ROUNDELS "Z" COLOR	ROUNDELS "Z" REF.	REMARKS	DWG.REF.
155328	A	Lunar White	10	Yellow	10a	As shown	C-9139-8
157329	Aa	Green	10b	Red	10c	As shown	C-9139-8
159403	Ab	Red	10c	Yellow	10a	As shown	C-9139-8
160575	Ac	Green	10b	Yellow	10a	As shown	C-9139-8
159339	Ad	Green	10b	Yellow	10a	As shown, with Cover Plates	C-9139-8
168038	Ae	Lunar White	10	Green	10b	Per View "W"	C-9139-8
173143	Af	Green	10b	Yellow	10a	Per View "W"	C-9139-8
179910	Ag	Red	10c	Green	10b	Per View "W"	C-9139-8
159404	Ah	Red	10c	Yellow	10a	Per View "W"	C-9139-8
170086	Aj	Lunar White	10	Yellow	10a	Per View "X"	C-9139-8

PIECE	REF.	DESCRIPTION	DWG.REF.
155329	2	CASE, for "ES-20" COLOR LIGHT ELECTRIC SWITCH LAMP.....	C-9133-7
	3	COVER WITH GASKET.....	C-9133-8
153259	3a	COVER without Gasket.....	C-9133-8
148064	4	HOOD.....	C-9133-5
153677	5	THUMB SCREW, with 1/8" x 3/4" S.Cotter (Cad.Pl.).....	8331-75
153383	6	YOKE.....	12562-4
153382	7	GASKET for Ref.3.....	8078-1454
	8	MACHINE SCREW NO.10-30 x 1" Rd.Hd.S. for fastening Ref.4 to Ref.2	
135274	9	LENS.....	B-8276-32
141363	10	ROUNDEL (LUNAR WHITE).....	8468-52
141360	10a	ROUNDEL (YELLOW).....	8468-52
141361	10b	ROUNDEL (GREEN).....	8468-52
141359	10c	ROUNDEL (RED).....	8468-52
149564	11	GASKET.....	8078-437
148223	12	LAMP RECEPTACLE.....	12415-13

UNION SWITCH & SIGNAL

PIECE	REF.	DESCRIPTION	DWG. REF.
145877	13	LAMP BULB (11 Volts, 11 Watts)	B-12409-18
	14	MACHINE SCREW 1/4"-20 x 3/4" Fil.Hd.S. (Cad.Pl.) with 1/4" Plain S.Lock Washer for attaching Ref.12 to Ref.2	
148082	15	TERMINAL BOARD BRACKET	10914-124
54937	16	RIVET for fastening Ref.15 to Ref.2	10301-50
410539	17	INSULATION	
	18	TERMINAL BOARD, with Nuts, Washers and Terminal Posts (Inc. 1-18a, 4-19 and 4-20)	411175
411175	18a	TERMINAL BOARD, with Terminal Posts, Washers and Nuts	
29102	19	WASHER	7828-139
29101	20	NUT	8109-193
	21	MACHINE NO.10-30 x 1/2" Fil.Hd.Br. (N.P.) for fastening Ref.18 to Ref.15	
150463	22	SCREEN	7318-76
116719	23	WASHER	8078-1352
159336	24	COVER (for blanking out light) for Ref.Ad	C-9133-5
	25	MACHINE SCREW, NO.10-30 x 1/2" Rd.Hd.S.(Cad.Pl.) for attaching Ref.24 to Case	
	26	PLUG CUTOUT RECEPTACLE	
	27	MACHINE SCREW, 1/4"-20 x 7/8" Fil.Hd.S. (Cad.Pl.) with 1/4" Pl.S.Lock Washer (1/16" x 1/16") and 1/4" Hex.Nut	
	28	MACHINE SCREW, NO.10-30 x 5/8" Fil.Hd.S. (Cad.Pl.)	
170088	29	PLATE	9999-660
121591	30	MEDIUM SCREW BASE LAMP RECEPTACLE	9954-60
159424	31	PLATE	9999-686
95268	32	LAMP BULB (120 Volts, 36 Watts)	B-12409-6

PLATE R-109

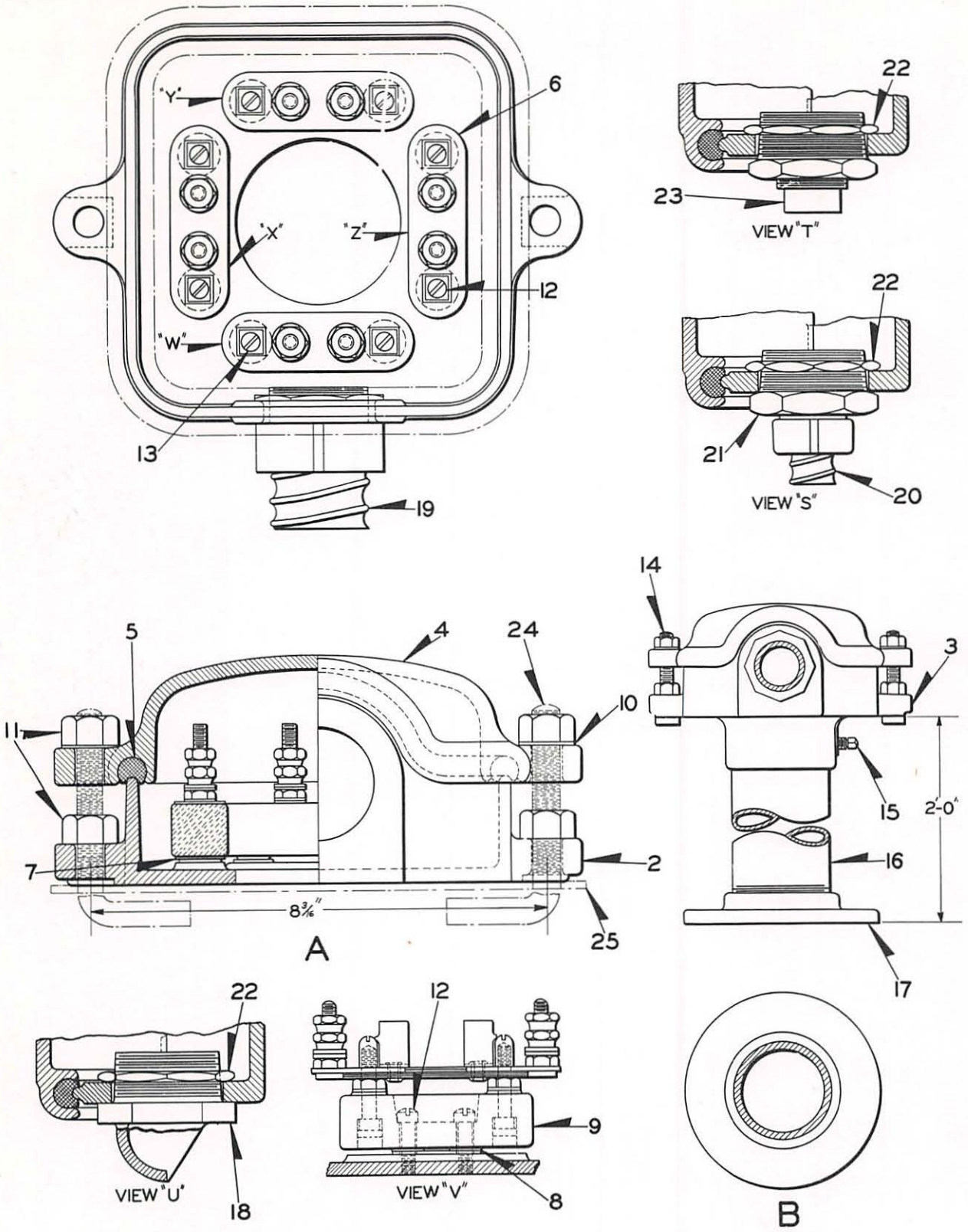

1-5-32

6-WAY JUNCTION BOX

UNION SWITCH & SIGNAL CO.

MODEL 28 CAR RETARDER

DETAIL PARTS

6-WAY JUNCTION BOXES

Order by Plate, Piece, Reference and Description.

Drawing references are shown for convenience in checking material with shipping list and invoices.

PIECE	REF.	DESCRIPTION	DWG. REF.
	A	6-WAY JUNCTION BOX complete with Foundation Bolts and Gasket (Orders should specify Box desired by referring to Refs.Aa to Aj).....	C-9180-10

PIECE	REF.	BOX REF.	TERMINAL BLOCKS W	X	Y	Z	CONDUIT FITTINGS
156120	Aa	2	Without	As shown	As shown	As shown	For 1-1/2" Conduit as shown
156121	Ab	2	Without	As shown	As shown	As shown	For 1" Conduit per View "S"
156122	Ac	2	Without	As shown	As shown	As shown	With 1" Pipe Plug per View "T"
156124	Ad	2	Without	Without	As shown	Without	Cable Outlet per View "U"
160694	Ae	2	Without	As shown	As shown	As shown	For 3/4" Conduit per View "S"
179942	Af	2a	As shown	As shown	As shown	As shown	With 1" Pipe Plug per View "T"
171209	Ag	2b	Without	Per View "V"	As shown	As shown	For 1-1/2" Conduit as shown
179598	Ah	2	Without	As shown	As shown	As shown	For 1-1/4" Conduit per View "S"
181384	Aj	2	Without	As shown	As shown	As shown	1-1/2" x 1-1/4" Galv.Pipe Reducing Bushing and 1-1/2" Galv.Lock Nut.

PIECE	REF.	BOX REF.	TERMINAL BLOCKS W	X	Y	Z	CONDUIT FITTINGS	REMARKS
156125	B	3	Without	As shown	As shown	As shown	For 1-1/2" Conduit as shown	with Pipe Post
156126	Ba	3	Without	As shown	As shown	As shown	For 1" Conduit per View "S"	with Pipe Post
156127	Bb	3	Without	Without	as shown	Without	Cable Outlet per View "U"	with Pipe Post
167210	Bc	3a	Without	Without	Ref.6a	Without	With 1" Pipe Plug per View "T"	without Pipe Post

PIECE	REF.	DESCRIPTION	DWG.REF.
154826	2	BOX for Refs.Aa, Ab, Ac, Ad, Ae, Ah and Aj.....	C-9181-18

UNION SWITCH & SIGNAL CO.

PIECE	REF.	DESCRIPTION	DWG. REF.
171222	2a	BOX for Ref.Af	C-9181-18
171208	2b	BOX for Ref.Ag	C-9181-18
154994	3	BOX for Refs.Ba, Bb and Bc	C-9181-21
167211	3a	BOX for Ref.Bd	C-9181-21
	4	COVER with Gasket Ref.5	C-9181-17
154827	4a	COVER ONLY	C-9181-17
	5	GASKET, 3/8" x 3/8" x 2'-3-1/2" Sq.Woven Flax Packing	
114168	6	TERMINAL BLOCK complete (With Center Terminals)	9968-629
114160	6a	TERMINAL BLOCK complete (With End Terminals)	9968-630
114118	7	GASKET for Ref.6	8078-1362
121356	8	GASKET for Refs.6a and 9	8078-1372
132837	9	FUSE HOLDING TERMINAL BLOCK complete	9968-713
7309	10	WASHER	7826-12
	11	HEX.NUT, 1/2" (Cad.Pl.)	
	12	MACHINE SCREW, NO.12-28 x 1" Fil.Hd.S.(Cad.Pl.) for attaching Terminal Blocks "X", "Y" and "Z" and Ref.9 to Box	
	13	MACHINE SCREW, NO.12-28 x 7/8" Fil.Hd.S.(Cad.Pl.) for attaching Terminal Block "W" to Box.	
	14	TAP BOLT, 1/2"-13 x 3" Sq.Hd.(Cad.Pl.)	
	15	SET SCREW, 3/8"-16 x 3/4" Sq.Hd.Cup Point I. (Cad.Pl.)	
145514	16	PIPE POST, 3" Galv.2'-0" long	B-10925-2
	17	3" GALV.FLOOR FLANGE	
149078	18	CABLE OUTLET	B-10342-54
	19	1-1/2" GALV.M.I.JAKE STRAIGHT BOX CONNECTOR for 1-1/2" D.S. Flex.S.Conduit.	
	20	3/4" GALV.M.I.JAKE STRAIGHT BOX CONNECTOR for 3/4" D.S.Flex. S.Conduit.	
	20a	1" GALV.M.I.JAKE STRAIGHT BOX CONNECTOR for 1" D.S.Flex.S. Conduit.	
	20b	1-1/4" GALV.M.I.JAKE STRAIGHT BOX CONNECTOR for 1-1/4" D.S. Flex.S.Conduit.	
	21	1-1/2" x 3/4" SHOULDERED M.I.GALV.PIPE REDUCING BUSHING for 3/4" Conduit.	
	21a	1-1/2" x 1" SHOULDERED M.I.GALV.PIPE REDUCING BUSHING for 1" Conduit and 1" Pipe Plug.	
	21b	1-1/2" x 1-1/4" SHOULDERED M.I.GALV.PIPE REDUCING BUSHING for 1-1/4" Conduit.	

UNION SWITCH & SIGNAL CO.

PIECE	REF.	DESCRIPTION	DWG. REF.
	22	1-1/2" GALV.LOCK NUT	
	23	1" GALV.C.I.PIPE PLUG	
144200	24	1/2" FOUNDATION BOLT.....	7913-23
178892	25	GASKET.....	8078-1538

PLATE R-113

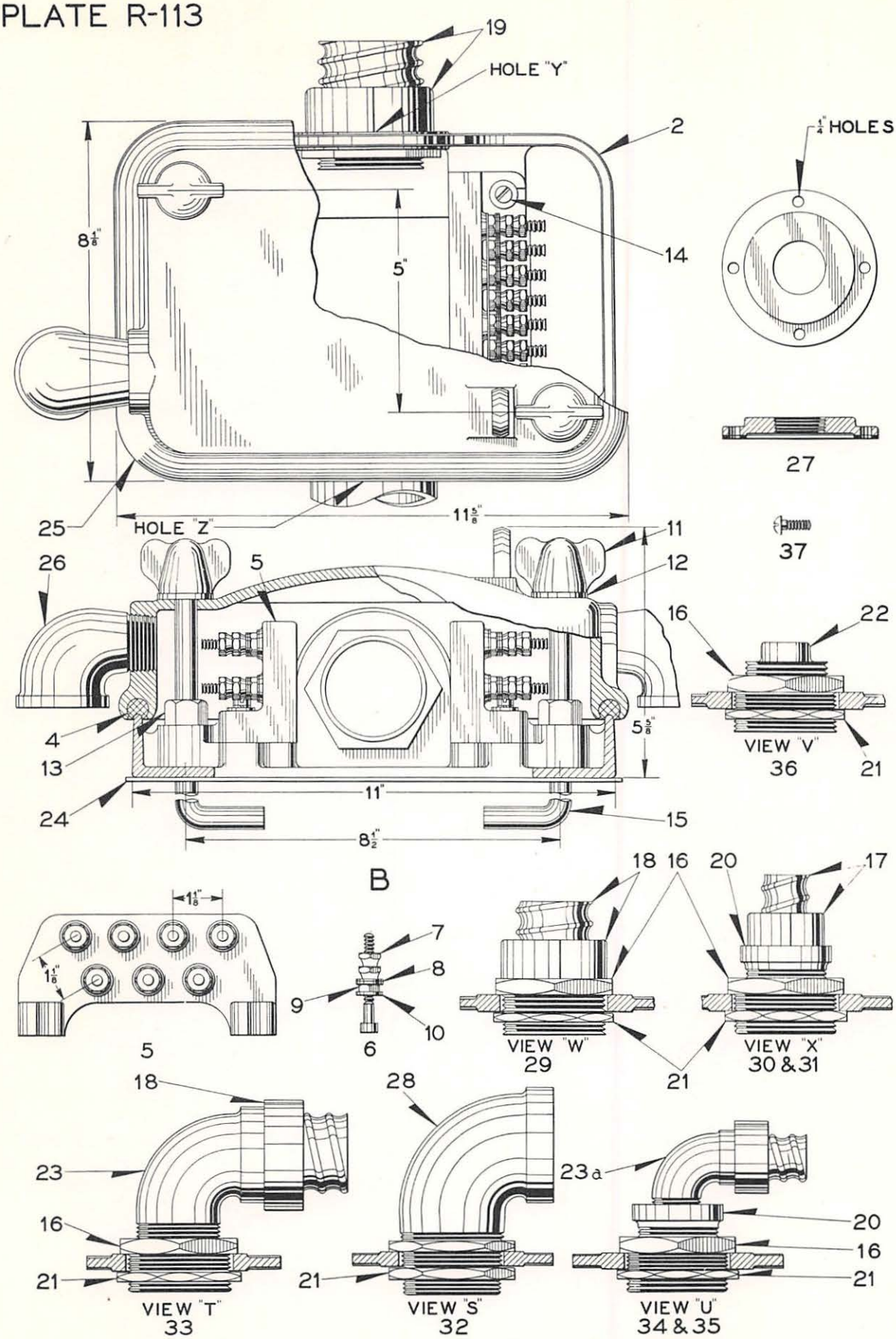

7 AND 14 WAY JUNCTION BOXES

2-25-38

UNION SWITCH & SIGNAL CO.

CAR RETARDER

DETAIL PARTS

and 14-WAY JUNCTION BOXES

Order by Plate, Piece, Reference and Abbreviated Description Given in Heavy Face Type Only

PIECE	REF.	DESCRIPTION	DWG. REF.
152100	B	7 or 14-WAY JUNCTION BOX WITH FOUNDATION BOLTS AND GASKET (Orders should specify Box desired by referring to Refs.Ba to Bt).....	C-9180-6

14-WAY JUNCTION BOX WITH WING NUTS AND 1/2" HEX.NUTS (Without Foundation Bolts and Gasket)(With 2 Terminal Boards) (With 3-3/4" x 7-1/4" Opening in base for wires)

			R.H.SIDE		L.H.SIDE		
PIECE	REF.	BOX REF.	HOLE "Y"	CONDUIT FITTINGS REF.	HOLE "Z"	CONDUIT FITTINGS REF.	REMARKS
155257	Ba	2	With	19 (2")	With	19 (2")	As shown
155254	Bb	2a	With	None	Without	---	
155255	Bc	2	With	None	With	None	
155256	Bd	2a	With	19 (2")	Without	---	
155258	Be	2a	With	29 (1-1/2")	Without	---	Per View"W"
155259	Bf	2	With	29 (1-1/2")	With	29 (1-1/2")	Per View"W"
155260	Bg	2	With	19 (2")	With	None	
155261	Bh	2	With	29 (1-1/2")	With	None	Per View"W"
155264	Bj	2a	With	36 (1-1/2" Pipe Plug)	Without	---	Per View"V"
155266	Bk	2	With	29 (1-1/2")	With	36 (1-1/2" Pipe Plug)	Per Views "V" and "W"
155267	Bm	2	With	30 (3/4")	With	33 (1-1/2" 90°)	Per Views "T" and "X"
155268	Bn	2	With	36 (1-1/2" Pipe Plug)	With	33 (1-1/2" 90°)	Per Views "T" and "V"
157356	Bp	2	With	34 (3/4" 90°)	With	33 (1-1/2" 90°)	Per Views "T" and "U"
210691	Bq	2b	With	None	With	None	Arranged for Cover Plates Refs. 27 and 27a

7-WAY JUNCTION BOX WITH WING NUTS AND 1/2" HEX.NUTS (Without Foundation Bolts and Gasket)(With 1 Terminal Board) (With 3-3/4" x 7-1/4" Opening in base for wires)

155262	Br	2	With	29 (1-1/2")	With	None	Per View"W"
155263	Bs	2a	With	29 (1-1/2")	Without	---	Per View"W"
155265	Bt	2	With	31 (1")	With	30 (3/4")	Per View"X"

UNION SWITCH & SIGNAL CO.

PIECE	REF.	DESCRIPTION	DWG. REF.
152018	2	BOX with Holes "Y" and "Z".....	C-9181-11
152017	2a	BOX with Hole "Y".....	C-9181-11
210690	2b	BOX with Holes "Y" and "Z" (Box drilled and tapped for No.12-24 Screws for application of Cover Plates Refs.27 and 27a)....	C-9181-11
	4	GASKET, 3/8" x 3/8" x 3'-3-1/2" Flax.Packing	
152097	5	TERMINAL BOARD WITH TERMINAL POSTS.....	9968-881
152096	5a	TERMINAL BOARD ONLY.....	9968-880
177280	6	TERMINAL POST with Nuts and Washers (Inc.1-6a, 2-7, 2-8, 1-9 and 1-10).....	12451-243
130593	6a	TERMINAL POST ONLY.....	8094-1192
29101	7	NUT.....	8109-193
29102	8	WASHER.....	7828-139
29103	9	HEX.NUT.....	8109-194
29104	10	WASHER.....	7828-138
176297	11	WING NUT with Gasket Ref.12.....	8331-72
175008	12	RUBBER WASHER for Ref.11.....	8078-1407
	13	HEX.NUT, 1/2" (Cad.Pl.)	
	14	MACHINE SCREW, NO.14-24 x 1-1/4" Fil.Hd.S.(Tin Pl.) with 1/4" Plain S.Lock Washer (1/8" x 1/16") Tin Pl. and Washer Ref.10	
144200	15	FOUNDATION BOLT, 1/2" x 14".....	7913-23
144357	16	BUSHING, 2" x 1-1/2".....	9663-14
	17	STRAIGHT BOX CONNECTOR, 3/4" M.I.Galv. for 3/4" S.S. Flexible Steel Conduit.	
	17a	STRAIGHT BOX CONNECTOR, 1" M.I.Galv. for 1" S.S. Flexible Steel Conduit.	
	18	STRAIGHT BOX CONNECTOR, 1-1/2" M.I.Galv. for 1-1/2" S.S. Flexible Steel Conduit	
	19	STRAIGHT BOX CONNECTOR, with Lock Nut 2" Galv. for 2" S.S. Flexible Steel Conduit	
	20	PIPE REDUCING BUSHING, 1-1/2" x 3/4" for 3/4" S.S. Flexible Steel Conduit	
	20a	PIPE REDUCING BUSHING, 1-1/2" x 1" for 1" S.S. Flexible Steel Conduit	
	21	LOCK NUT, 2" Galv.Steel	
	22	PIPE PLUG, 1-1/2" Std.	
	23	90° STREET ELL, 1-1/2" M.I.Galv.	
	23a	90° STREET ELL, 3/4" M.I.Galv.	
	23b	90° STREET ELL, 1" M.I.Galv.	
178893	24	GASKET.....	8078-1539
	25	COVER with Two Ventilators Ref.26 and Gasket Ref.4.....	C-9181-
186506	25a	COVER with Gasket Ref.4 (Cover tapped for ventilators but ventilators are not included).....	C-9181-12
185702	26	VENTILATOR COMPLETE.....	7318-82

UNION SWITCH & SIGNAL CO.

PIECE	REF.	DESCRIPTION	DWG. REF.
	27	COVER PLATE with 1" Pipe Tap (RF-303) for Ref.Bq	
	27a	COVER PLATE with 1-1/2" Pipe Tap (RF-503) for Ref.Bq	
	28	90° STREET ELL, 2" M.I.Galv.	
	29	STRAIGHT CONDUIT FITTINGS for 1-1/2" S.S.Flexible Steel Conduit (Inc.1-16, 1-18 and 1-21)	
	30	STRAIGHT CONDUIT FITTINGS for 3/4" S.S.Flexible Steel Conduit (Inc.1-16, 1-17, 1-20 and 1-21)	
	31	STRAIGHT CONDUIT FITTINGS for 1" S.S.Flexible Steel Conduit (Inc.1-16, 1-17a, 1-20a and 1-21)	
	32	90° STREET ELL, 2" M.I.Galv. with two Lock Nuts Ref.21	
	33	90° CONDUIT FITTINGS for 1-1/2" S.S.Flexible Steel Conduit (Inc.1-16, 1-18, 1-21 and 1-23)	
	34	90° CONDUIT FITTINGS for 3/4" S.S.Flexible Steel Conduit (Inc.1-16, 1-20, 1-21 and 1-23a)	
	35	90° CONDUIT FITTINGS for 1" S.S.Flexible Steel Conduit (Inc.1-16, 1-20a, 1-21 and 1-23b)	
	36	MATERIAL FOR PLUGGING HOLES (Inc.1-16, 1-21 and 1-22)	
	37	MACHINE SCREW, NO.14-24 x 5/8" Rd.Hd.Br. for attaching Refs. 27 and 27a to Box.	

2-25-38

PLATE R-119

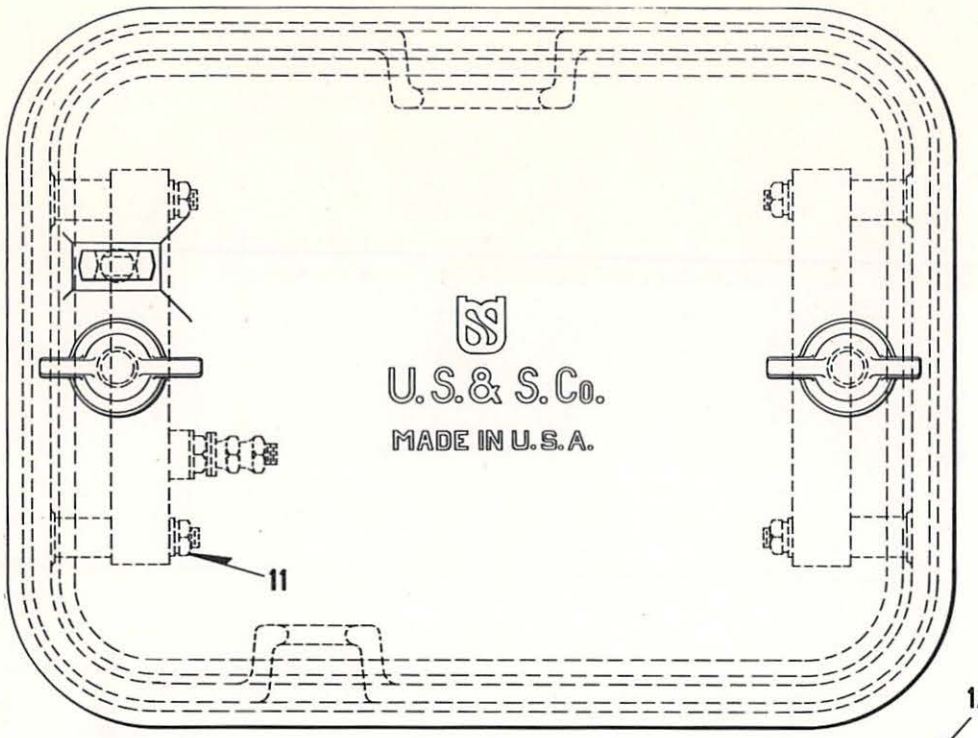

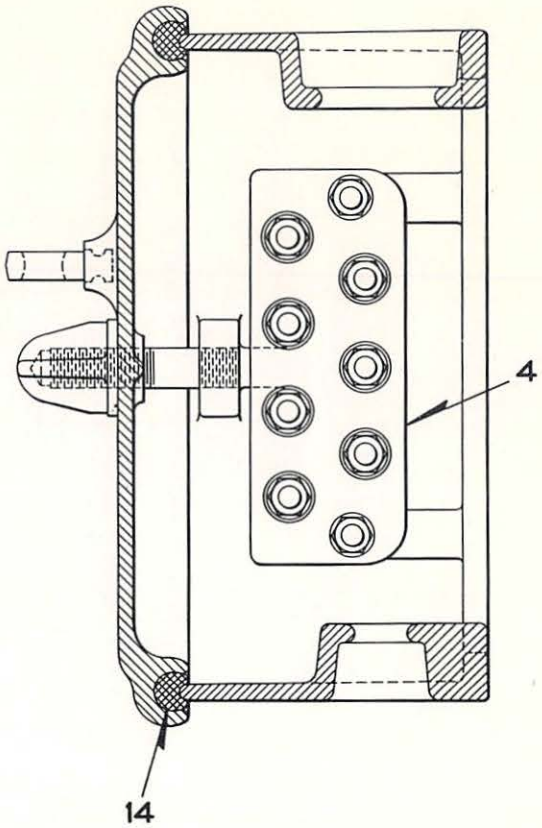

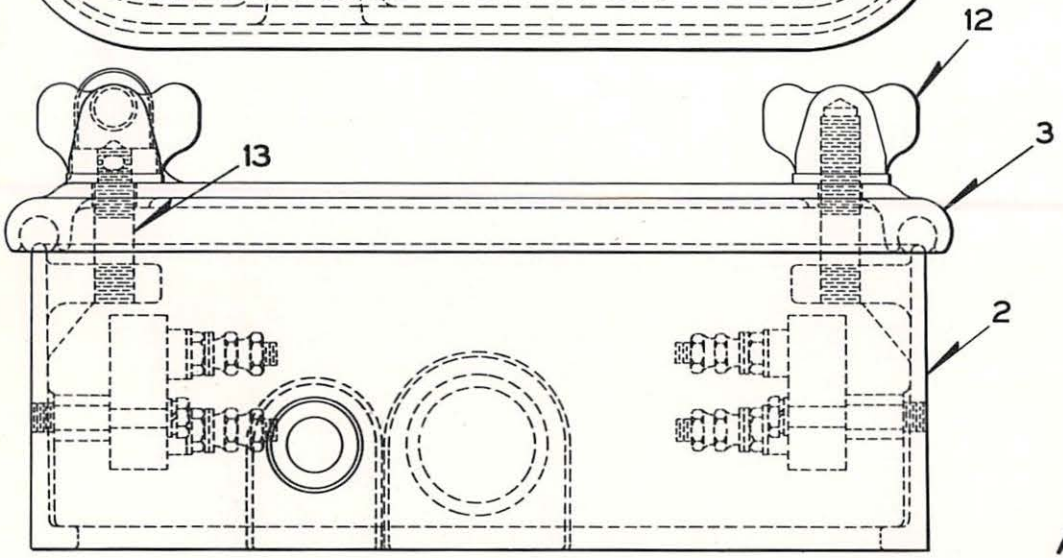

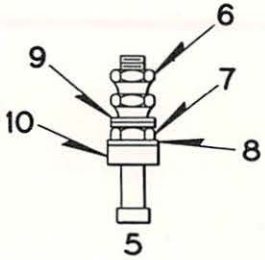

A

JUNCTION BOX

10-7-31

406

UNION SWITCH & SIGNAL CO.

MODEL 28 CAR RETARDER

DETAIL PARTS

JUNCTION BOX

Order by Plate, Piece, Reference and Abbreviated Description Given in Heavy Face Type Only

Piece	Ref.	Description	Drawing Reference
171526	A	JUNCTION BOX complete with Two Terminal Boards (7 Terminal Posts on each Board) for Parkway Cable.....	C-9180-16
171427	2	BOX ONLY, for Ref.A.....	C-9181-30
171415	3	COVER.....	C-9181-31
144259	4	TERMINAL BOARD with 7 Terminal Posts Ref.5.....	9968-809
143982	4a	TERMINAL BOARD ONLY, (without Terminal Posts) for Ref.4.....	9968-804
	5	TERMINAL POST with Bushing, Nuts and Washers (Inc.1-5a, 2-6, 1-7, 1-8, 2-9 and 1-10) for Ref.4.....	12451-
130593	5a	TERMINAL POST ONLY, for Ref.5.....	8094-1192
29101	6	NUT.....	8109-193
29103	7	NUT.....	8109-194
29104	8	WASHER.....	7828-138
29102	9	WASHER.....	7828-139
151481	10	INS. BUSHING.....	8095-38
171559	11	STUD with Washer Ref.11a, 1/4" Plain S.Lock Washer (1/8" x 1/16") and Nut Ref.11b.....	8114-778
22008	11a	WASHER, for Ref.11.....	7826-68
93420	11b	NUT, for Ref.11.....	8265-128
176297	12	WING NUT.....	8331-72
171691	13	STUD, used with Ref.12.....	8115-203
	14	SQ.FLAX PACKING 3/8" x 3/8" x 3'-1-1/2" LONG, for Ref.3	

PLATE R-120

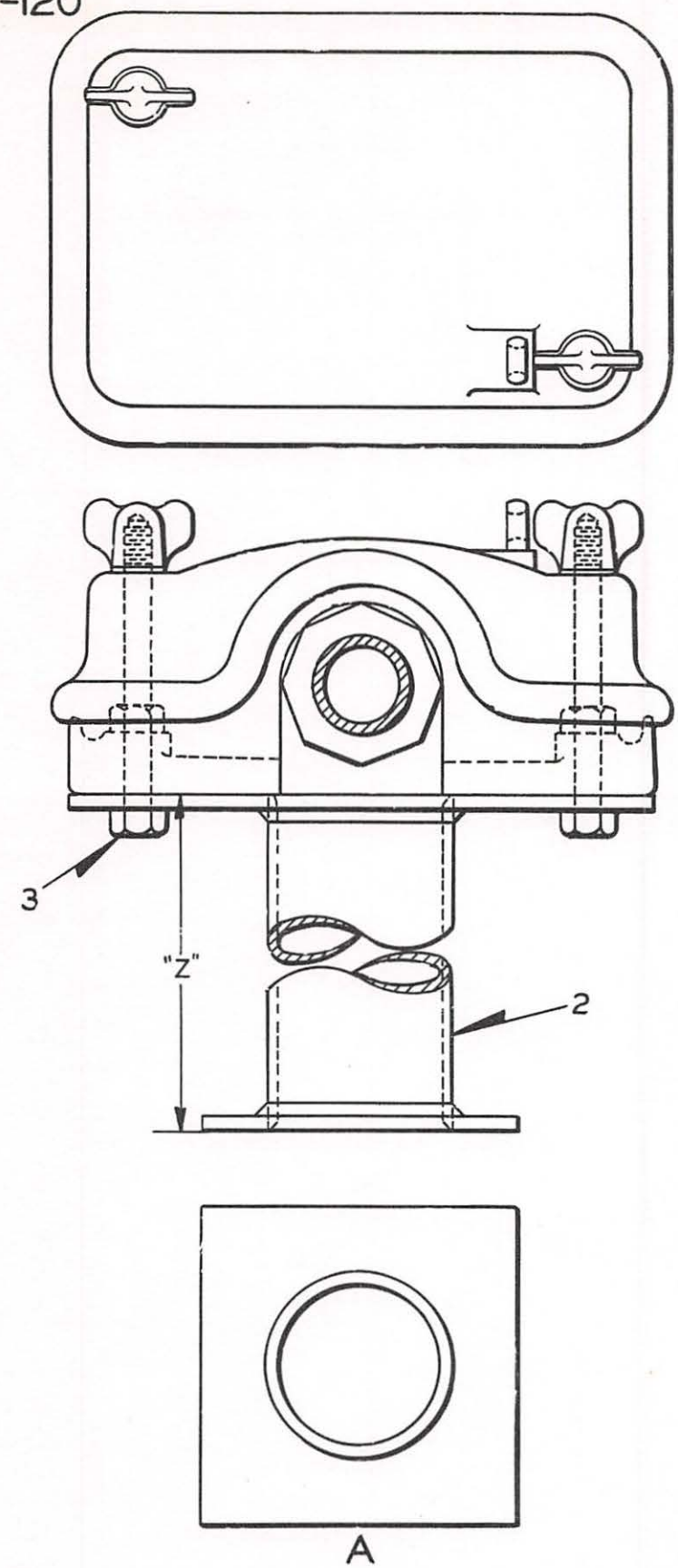

JUNCTION BOX MOUNTED ON 3" PIPE PEDESTAL

12-30-31

UNION SWITCH & SIGNAL CO.

MODEL 28 CAR RETARDER

DETAIL PARTS

14 AND 22-WAY JUNCTION BOXES MOUNTED ON 3"
PIPE PEDESTAL

Order by Plate, Piece, Reference and Description.

Drawing references are shown for convenience in checking material with shipping list and invoices.

___ WAY JUNCTION BOX complete, mounted on 3" Pipe Pedestal

PIECE	REF.	PEDESTAL REF.	PEDESTAL "Z" DIM.	JUNCTION BOX	REMARKS	DWG.REF.
160288	A	2	2'-0"	Ref.Ap, Plate R-113	14-Way	C-9180-14
171868	Aa	2a	2'-6"	Ref.Ap, Plate R-113	14-Way	C-9180-14
171869	Ab	2b	2'-6"	Ref.Ad, Plate R-117	22-Way	C-9180-14

PIECE	REF.	DESCRIPTION	DWG.REF.
160079	2	PEDESTAL (3" Pipe), "Z" dim. 2'-0" long, with Top and Bottom Plates, for Ref.A.....	C-9181-6
160548	2a	PEDESTAL (3" Pipe), "Z" dim. 2'-6" long, with Top and Bottom Plates, for Ref.Aa.....	C-9181-26
171867	2b	PEDESTAL (3" Pipe), "Z" dim. 2'-6" long, with Top and Bottom Plates, for Ref.Ab.....	C-9181-26
	3	TAP BOLT 1/2"-13 x 5" Hex.Hd. (Cad. Pl.)	

PLATE R-140

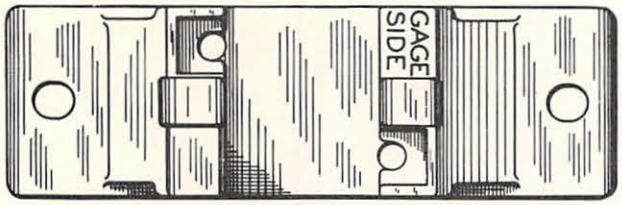

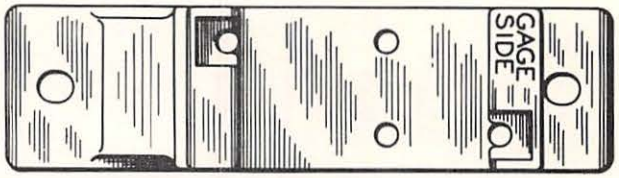

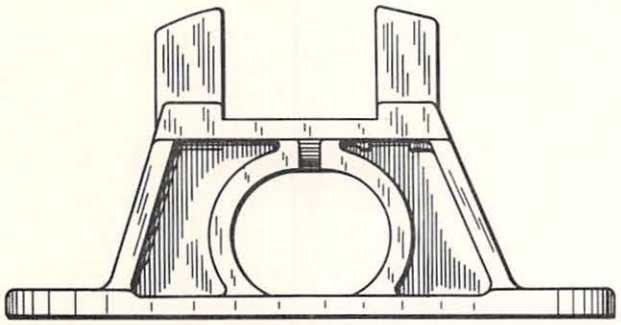

2

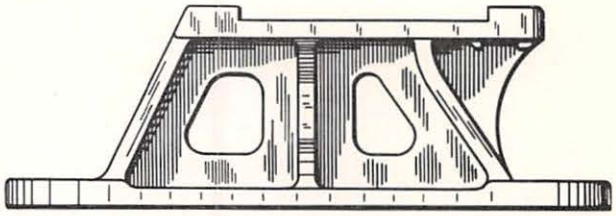

3

1" HOLES FOR REF. 7a

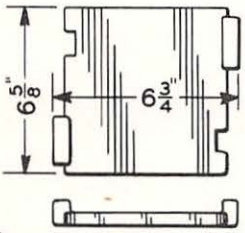

6

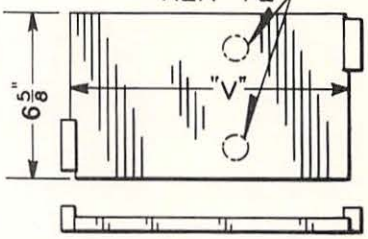

7

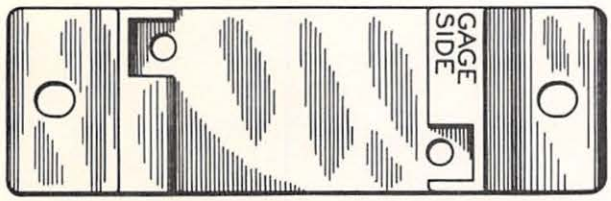

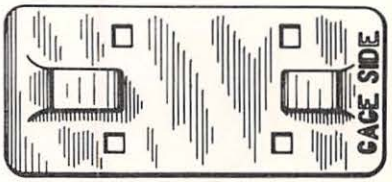

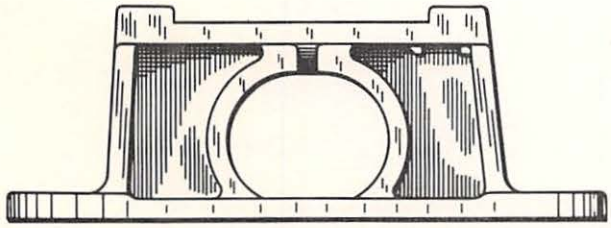

4

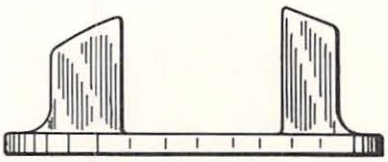

5

RAIL SUPPORTS
AND FILLER PLATES

UNION SWITCH & SIGNAL CO.

MODELS "31" AND "31A" CAR RETARDERS

DETAIL PARTS

RAIL SUPPORTS AND FILLER PLATES

Order by Plate, Piece, Reference and Abbreviated Description Given in Heavy Face Type Only

RAIL SUPPORTS FOR CAR RETARDER

PIECE	REF.	USED ON MODEL RETARDER	LOCATION	WEIGHT AND SECTION OF RAIL	DWG.REF.
188394	2	Model 31	Intermediate	100# A.R.A.Series A and 105# D.L.& W.	D-2472-2
187555	2a	Model 31	Intermediate	130# P.S.	D-2472-2
194453	2b	Model 31	Intermediate	80# A.S.C.E.	D-2472-2
199793	2c	Model 31A	Intermediate	131# P.S.	D-2472-5
185247	2d	Model 31A	Intermediate	130# P.S.	D-2472-5
207089	3	Model 31	Intermediate for Running & Guard Rails (For use with Single Rail Retarders)	100# A.R.A.Series A and 105# D.L.& W.	D-2472-8
210007	3a	Model 31A	Intermediate for Running & Guard Rails (For use with Single Rail Retarders)	131# P.S.	D-2472-9
206947	4	Model 31	Intermediate for Continuous Ins.Rail Joint	105# D.L.& W.	D-2472-6
207028	4a	Model 31A	Intermediate for Continuous Ins.Rail Joint	131# P.S.	D-2472-7
188475	5	Model 31	Entering End	100# A.R.A.Series A and 105# D.L.& W.	D-2472-3
194452	5a	Model 31	Entering End	80# A.S.C.E.	D-2472-3
199800	5b	Model 31A	Entering End	130# and 131# P.S.	D-2472-3

Note:- If Rail Supports other than those listed are required orders should so state, giving weight and section of Rail.

PIECE	REF.	DESCRIPTION	DWG.REF.
206459	6	FILLER PLATE for use with 130# P.S.Rail on 131# P.S.Rail Support (For Left Hand and Right Hand Cylinder Support Bearings, Intermediate and End Rail Supports).....	C-9458-8
207031	7	FILLER PLATE ("V" dimension 10-1/8") for use with 130# P.S. Rail on 131# P.S.Rail Support (For Ins.Rail Joint) (Without 1" Holes).....	C-9458-8

UNION SWITCH & SIGNAL CO.

PIECE	REF.	DESCRIPTION	DWG. REF.
210049	7a	FILLER PLATE ("V" dimension 11-1/4" and 1" Holes as shown in dot and dash lines) for use with 130# P.S.Rail on 131# P.S. Rail Support (For Guard Rail Support).....	C-9458-10
		Note:- For Rail Support Bearings for Cylinder Unit Assemblies refer to Refs.6 to 7b, Plate R-22 for Model 31 and Refs.6 to 7a, Plate R-22A for Model 31A Retarders.	

2-25-38

PLATE R-149

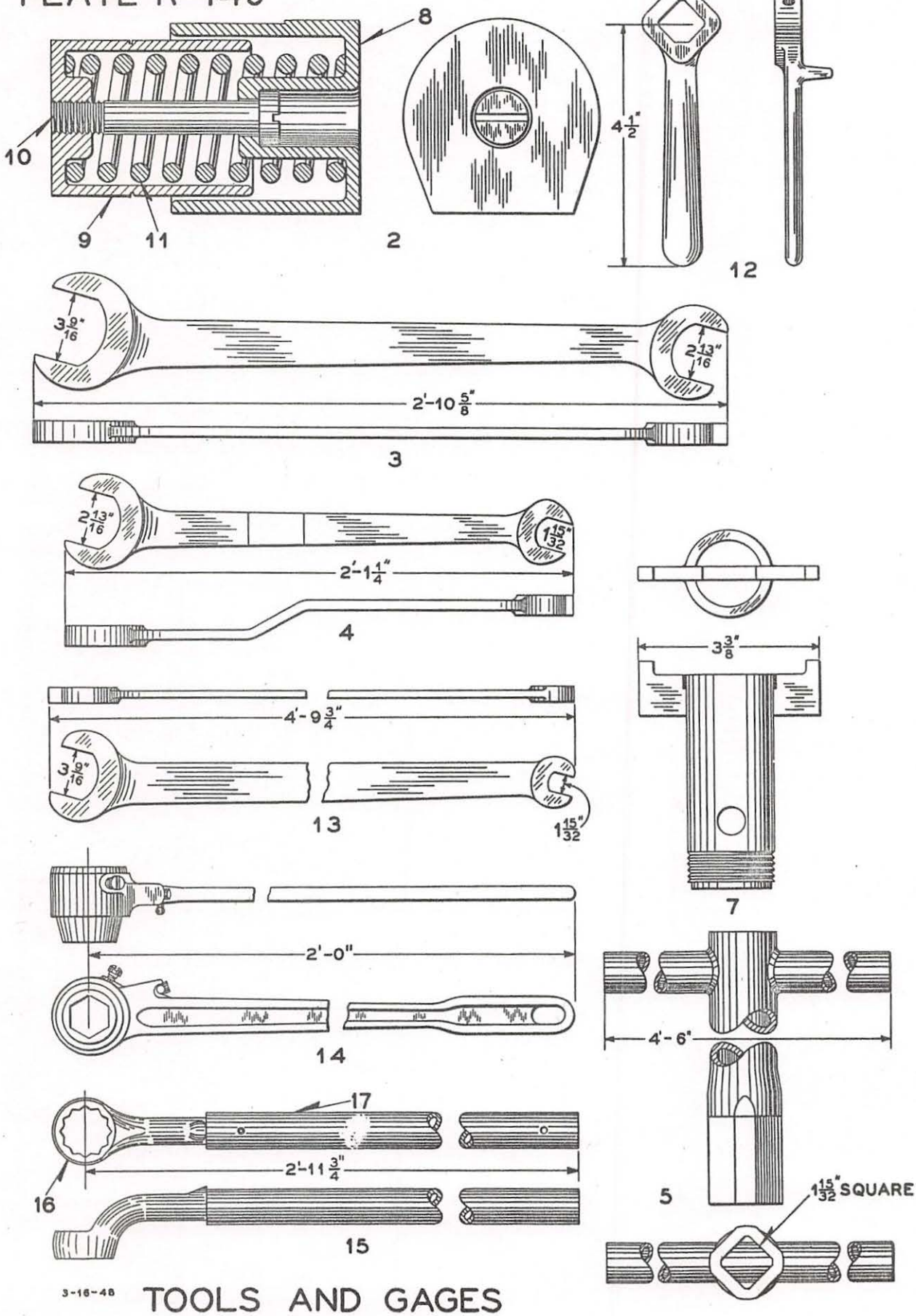

3-16-48

TOOLS AND GAGES

UNION SWITCH & SIGNAL

MODELS "31" AND "31A" E. P. CAR RETARDERS

DETAIL PARTS

TOOLS AND GAGES

Order by Plate, Piece, Reference and Abbreviated Description Given in Heavy Face Type Only

PIECE	REF.	DESCRIPTION	DWG. REF.
188823	2	BRAKE SHOE GAGE, COMPLETE	B-12640-4
188733	3	WRENCH for Brake Beam Adj. Screw Lock Nut and Lever Spring Stop Nut.	12648-27
188734	4	WRENCH for Lever Spring Bolt Nut; Brake Shoe, Bolt Nut and Brake Beam Screw	12648-28
109947	5	WRENCH COMPLETE for Brake Beam Hold Down Bolts	12648-13
189154	7	WRENCH COMPLETE for Control Valve Piston Nut	12648-9
188817	8	OUTSIDE SPRING SOCKET	B-12640-3
188818	9	INSIDE SPRING SOCKET	B-12640-3
188821	10	BOLT	8277-138
188822	11	SPRING	7770-503
	12	HANDLE for 3/4" Wabco Stop Cock (W.A.B.Co.Pc.No.15279)	
228495	13	WRENCH for Brake Shoe Bolts, Brake Beam Adjusting Screws and Lock Nuts	12648-31
259839	14	REVERSIBLE RATCHET WRENCH for Brake Shoe Bolts	12648-33
	15	HEAVY DUTY OFFSET WRENCH Ref.16 with Tubular Handle Ref.17	
	16	HEAVY DUTY OFFSET WRENCH (CN39929)	
	17	TUBULAR HANDLE, 30" (CN39844)	
		Note:-Tools for E. P. Switch Valve will be found on Plate R-151.	

PLATE R-151

TOOLS FOR PIN (INLET) VALVE SEATS
$\frac{1}{4}$" OR $\frac{11}{32}$" ARMATURE STEM

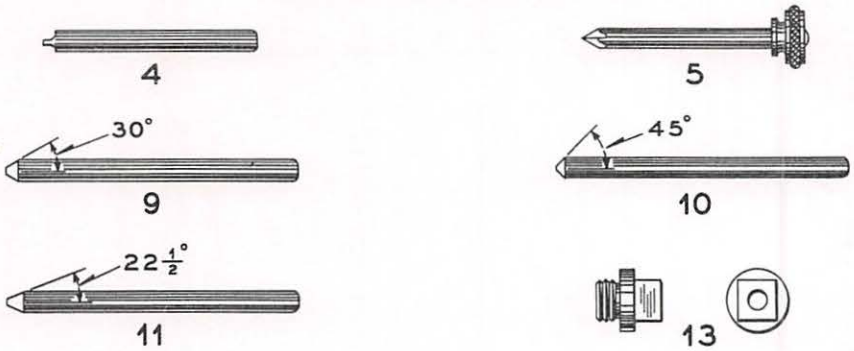

TOOLS FOR ARMATURE (EXHAUST) VALVE SEATS

$\frac{1}{4}$ DIAMETER ARMATURE STEM

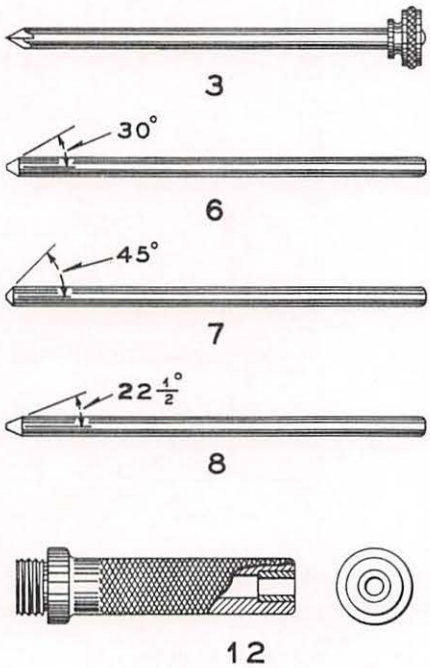

$\frac{11}{32}$" DIAMETER ARMATURE STEM

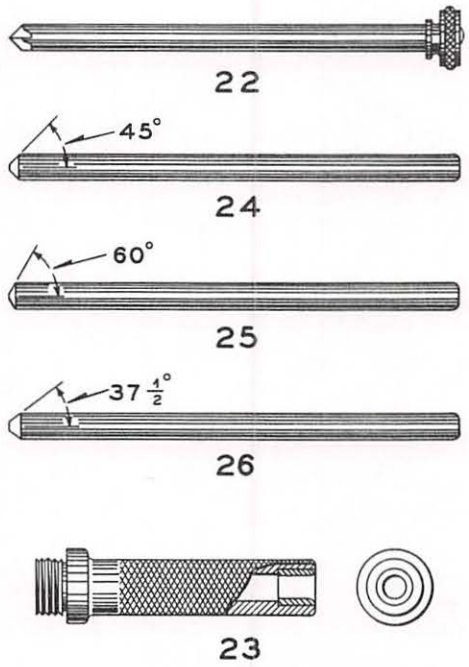

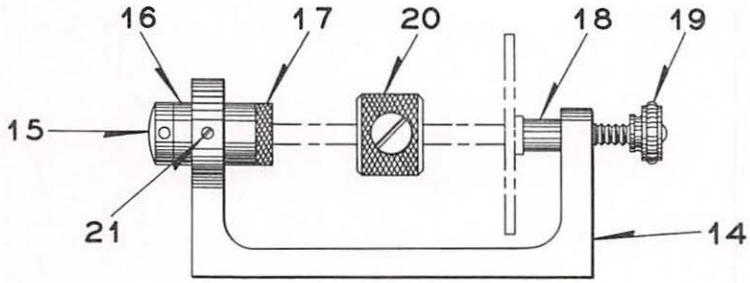

34

TOOLS FOR ELECTRO-PNEUMATIC VALVES 1-14-49

PLATE R-151

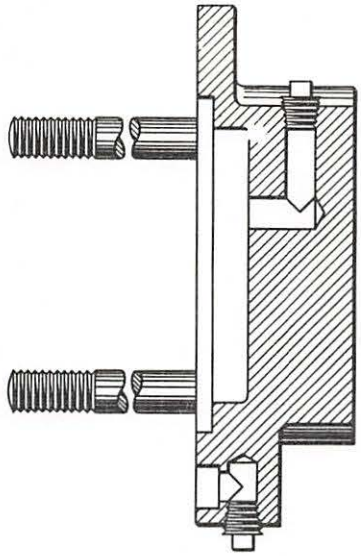

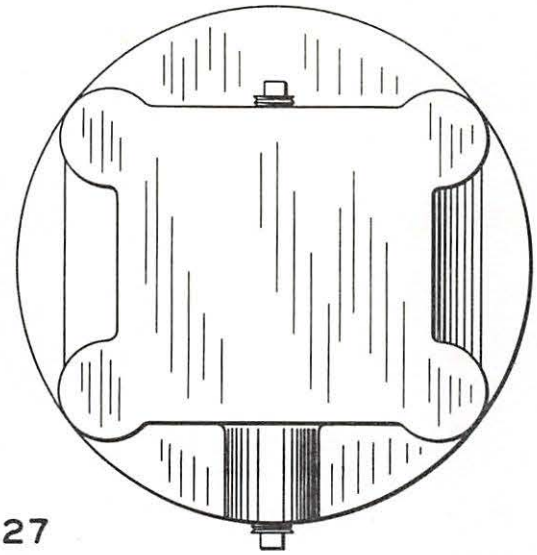

27

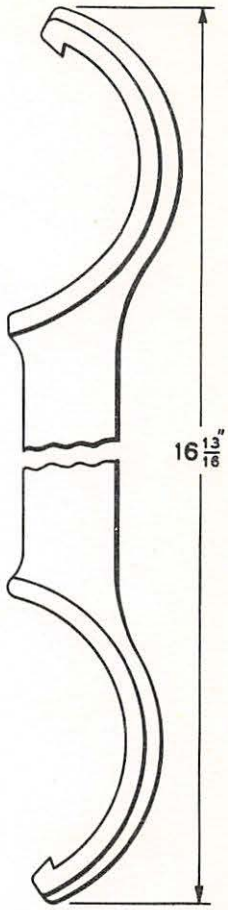

31

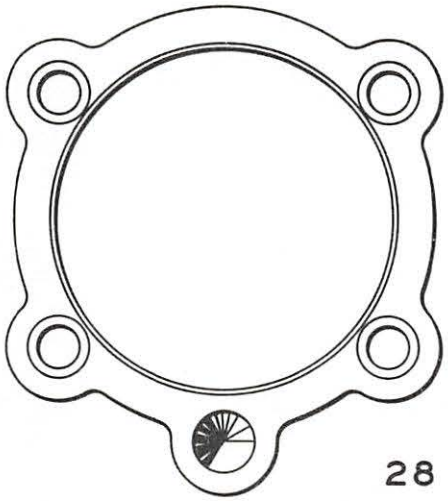

28

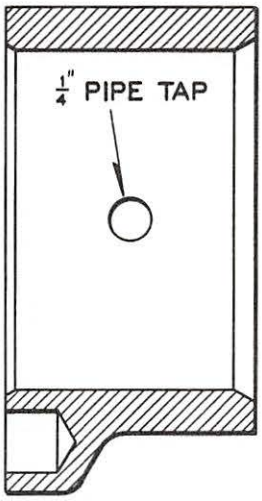

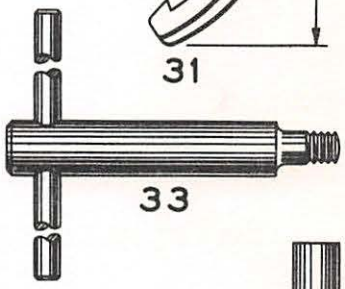

33

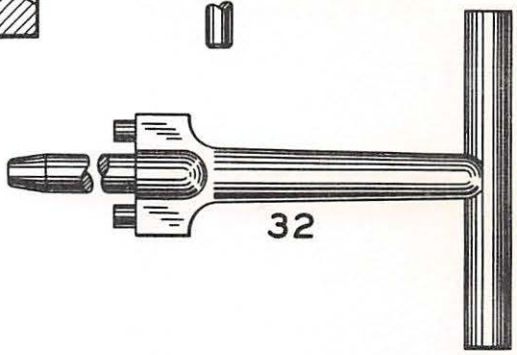

32

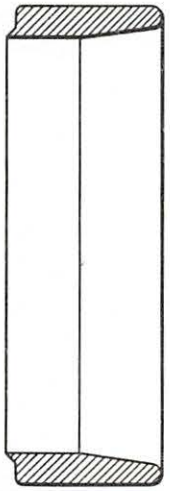

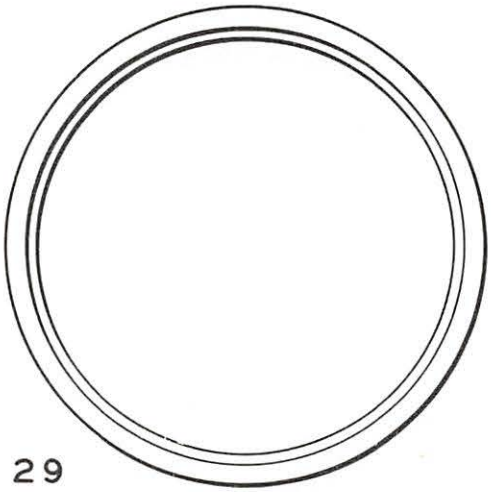

29

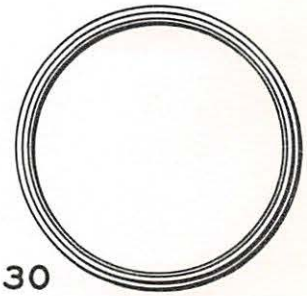

30

4-12-45

TOOLS FOR ELECTRO-PNEUMATIC VALVES

UNION SWITCH & SIGNAL

CAR RETARDERS
DETAIL PARTS

TOOLS FOR E.P. VALVE AND SWITCH CYLINDERS

Order by Plate, Piece, Reference and Abbreviated Description Given in Heavy Face Type Only

PIECE	REF.	DESCRIPTION	DWG. REF.
93395	3	RESEATING TOOL for 1/4 in. diameter Armature Stem Seat	B-5371-1
11045	4	SCREW DRIVER for Grinding in Pin Valve	B-5371-1
93396	5	RESEATING TOOL for Pin Valve Seat	B-5371-1
98516	6	RESEATING PUNCH for 1/4 in. diameter Armature Stem Seat	B-5371-2
152450	7	RESEATING PUNCH for 1/4 in. diameter Armature Stem Seat	B-5371-2
152451	8	RESEATING PUNCH for 1/4 in. diameter Armature Stem Seat	B-5371-2
98517	9	RESEATING PUNCH for Pin Valve Seat	B-5371-2
152452	10	RESEATING PUNCH for Pin Valve Seat	B-5371-2
152453	11	RESEATING PUNCH for Pin Valve Seat	B-5371-2
11048	12	REAMER GUIDE for 1/4 in. diameter Armature Stem Seat	B-5371-2
11049	13	REAMER GUIDE for Pin Valve Seat	B-5371-2
11050	14	BRACKET	B-5371-1
11039	15	CUTTER for 1/4" diameter Stem	B-5371-1
261745	15a	CUTTER for 11/32" diameter Stem	B-5371-5
11038	16	CUTTER SLEEVE for 1/4" diameter Stem	B-5371-1
261746	16a	CUTTER SLEEVE for 11/32" diameter Stem	B-5371-5
11040	17	SLEEVE GUIDE for 1/4" diameter Stem	B-5371-1
261747	17a	SLEEVE GUIDE for 11/32" diameter Stem	B-5371-5
11042	18	SLEEVE for Center Pin	B-5371-1
93397	19	CENTER PIN COMPLETE	B-5371-1
11047	20	CLAMP COMPLETE	B-5371-1
1736	21	SCREW	8098-92
229434	22	RESEATING TOOL for 11/32 in. diameter Armature Stem Seat	B-5371-4

UNION SWITCH & SIGNAL

PIECE	REF.	DESCRIPTION	DWG. REF.
229438	23	REAMER GUIDE for 11/32 in. diameter Armature Stem Seat.....	B-5371-4
229435	24	RESEATING PUNCH for 11/32 in. diameter Armature Stem Seat.....	B-5371-4
229436	25	RESEATING PUNCH for 11/32 in. diameter Armature Stem Seat.....	B-5371-4
229437	26	RESEATING PUNCH for 11/32 in. diameter Armature Stem Seat.....	B-5371-4
156159	27	FIXTURE FOR TESTING D-VALVE for 4 in. diameter Cylinder.....	12469-2
253593	27a	FIXTURE FOR TESTING D-VALVE for 5 in. diameter Cylinder.....	12469-9
92952	28	FIXTURE FOR ASSEMBLING SWITCH CYLINDER PISTONS into 4 in. diameter Cylinders.....	12469-1
236397	29	COLLET FOR ASSEMBLING SWITCH CYLINDER PISTONS into 5 in. diameter Cylinders.....	12469-4
188069	30	COLLET FOR ASSEMBLING SHIFTING PISTON into Shifting Piston Chamber.....	12469-3
11024	31	SPANNER WRENCH for D-Valve Chamber Head and Switch Cylinder Stuffing Box Nut.....	B-8802-3
84206	32	SPANNER WRENCH for Shifting Piston Packing Nut.....	B-8802-4
188096	33	SHIFTING PISTON PULLER.....	8802-44
274459	34	TOOL COMPLETE for recutting Valve Stems (11/32" and 1/4" diameters)	B-5371-5

PLATE R-152

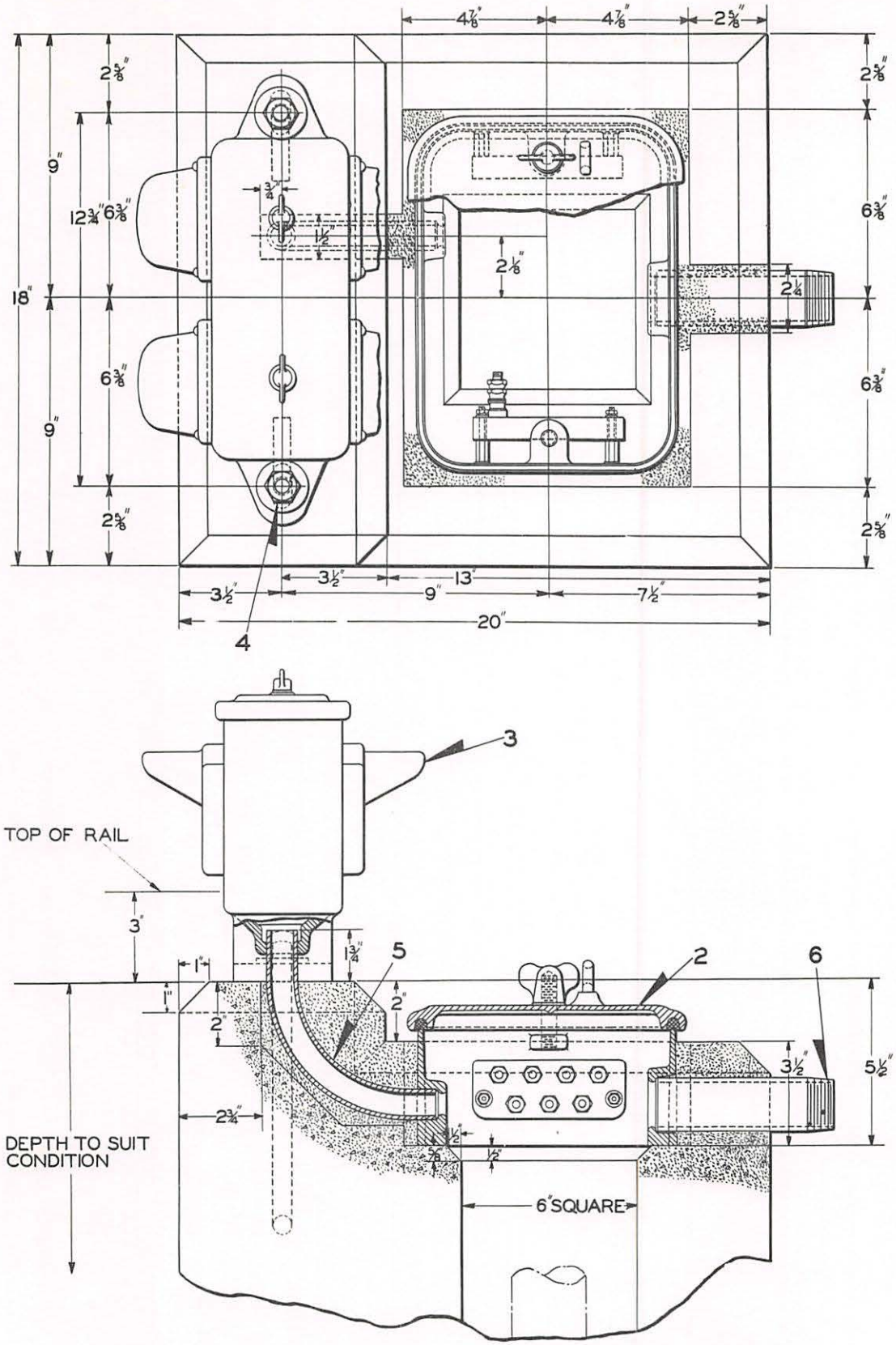

SWITCH LAMP AND JUNCTION BOX FOUNDATION LAYOUT

UNION SWITCH & SIGNAL

MODEL 28 CAR RETARDER

DETAIL PARTS

"ES-20" SWITCH LAMP AND JUNCTION BOX
FOUNDATION

Order by Plate, Piece, Reference and Abbreviated Description Given in Heavy Face Type Only

Piece	Ref.	Description	Drawing Reference
171526	2	JUNCTION BOX (When ordering refer to Plate R-119).....	C-9180-16
	3	"ES-20" SWITCH LAMP (When ordering refer to Plate R-105).....	C-9139-8
123057	4	FOUNDATION BOLTS 5/8" x 10" with 5/8" Hex.Nut and 5/8" Plate Washer.....	7913-310
171704	5	CONDUIT (ELL) 13/16" I.D.....	B-12505-2
171703	6	CONDUIT 1/2" x 6".....	B-12505-1

Reprinted in U.S.A.

SECTION

T

CENTRALIZED TRAFFIC CONTROL
REMOTE CONTROL
UNION ROUTE (UR) AND UNIT LEVER
RELAY INTERLOCKINGS

AXED
MAY 16 2006

Union Switch & Signal Co.
Swissvale, Pa.

SECTION T

TABLE OF CONTENTS

	Plate
CONTROL MACHINE AND OFFICE UNITS	T-152
FIELD UNITS	T-200
LAMP RECEPTACLES, LAMPS, TOGGLE SWITCHES AND NUMBER PLATES	T-250
CIRCUIT CONTROLLERS, PUSH BUTTONS AND BLOCKING DEVICES	T-255
CONTACT SPRING ASSEMBLIES FOR CIRCUIT CONTROLLERS	T-260
CONTACT SPRING ASSEMBLIES FOR CIRCUIT CONTROLLERS	T-263
STYLE L-1, L-2 AND L-3 RELAYS	T-300
CONTACT SPRING ASSEMBLIES FOR STYLE L RELAYS	T-310
STYLE "LP-53" RELAYS	T-320
STYLE "LP-58" RELAYS	T-322
MOUNTING BASES FOR STYLE "LP-53" RELAYS	T-327
MOUNTING BASES AND STACKS FOR "LP-58" RELAYS	T-328
CONTACT SECTIONS FOR STYLE "LP-53" RELAYS	T-330
CONTACT SECTIONS FOR STYLE "LP-58" RELAYS	T-331
STACKS FOR STYLE "LP-53" RELAY MOUNTING BASES	T-337
STYLE "P-3" POLAR RELAY	T-345
STYLE "P-4" POLAR RELAY	T-346
RELAY RACKS FOR STYLE "KP" RELAYS	T-350
STYLE "KP" RELAYS	T-358
STYLE "KN" RELAYS	T-378
57 PEN TRAIN GRAPH (2 & 3-Pos.) TELECHRON DRIVE	T-452
40 PEN TRAIN GRAPH (2 & 3-Pos.) TELECHRON DRIVE	T-452-1
40 and 57 PEN TRAIN GRAPHS (2 & 3 Pos.) TELECHRON DRIVE	T-453
DRIVING MECHANISM FOR TRAIN GRAPH	T-478

Table of Contents (cont'd.) Plate

DRIVING MECHANISM FOR TRAIN GRAPH.....T-479

TRAIN GRAPH DETAILS.....T-498

RECTIFIERS.....T-500

RESISTORS.....T-510

TERMINAL BOARDS AND PLUG CONNECTORS.....T-520

CONDENSERS, SPARK ARRESTER UNITS, SWITCHES, etc.....T-525

OFFICE AND FIELD TEST SET (Forms 506 and 506-A Systems).....T-551

OFFICE AND FIELD TEST SET (Form 506-B System).....T-552

OFFICE AND FIELD TEST SET (Forms 504-B and 504-C Systems).....T-553

TEST SET (Form 510 System).....T-554

TELEPHONE SET.....T-565

TELEPHONE SET WITH JACKS FOR MAINTAINERS BREAST SET.....T-566

TELEPHONE SET.....T-567

PORTABLE CARRIER TELEPHONE.....T-570

POWER PACK.....T-570-1

CYCLE RECORDER, TOOLS AND SUPPLIES.....T-575

~~VOICE OPERATED CALLING DEVICE.....T-580~~

FILTERS.....T-581

CALL DETECTOR, HANDSET HOOK AND FILTER FOR PORTABLE CARRIER TELEPHONE.....T-585

BELLS.....T-590

PLATE T-152

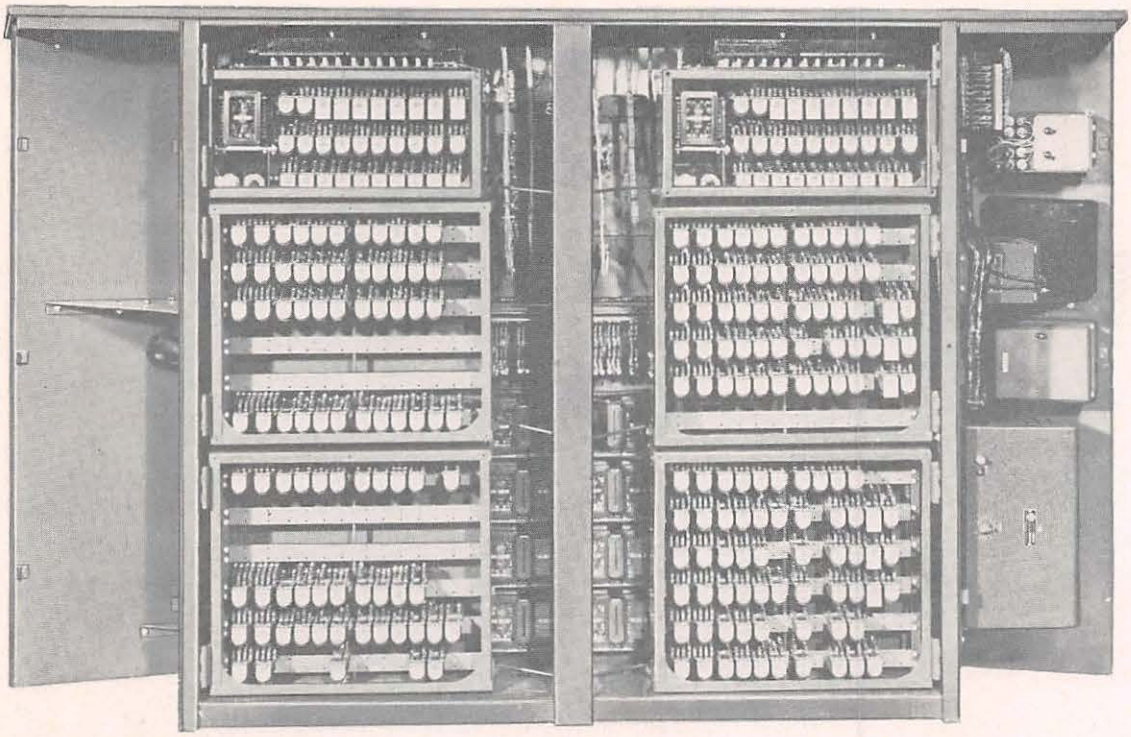

REAR VIEW

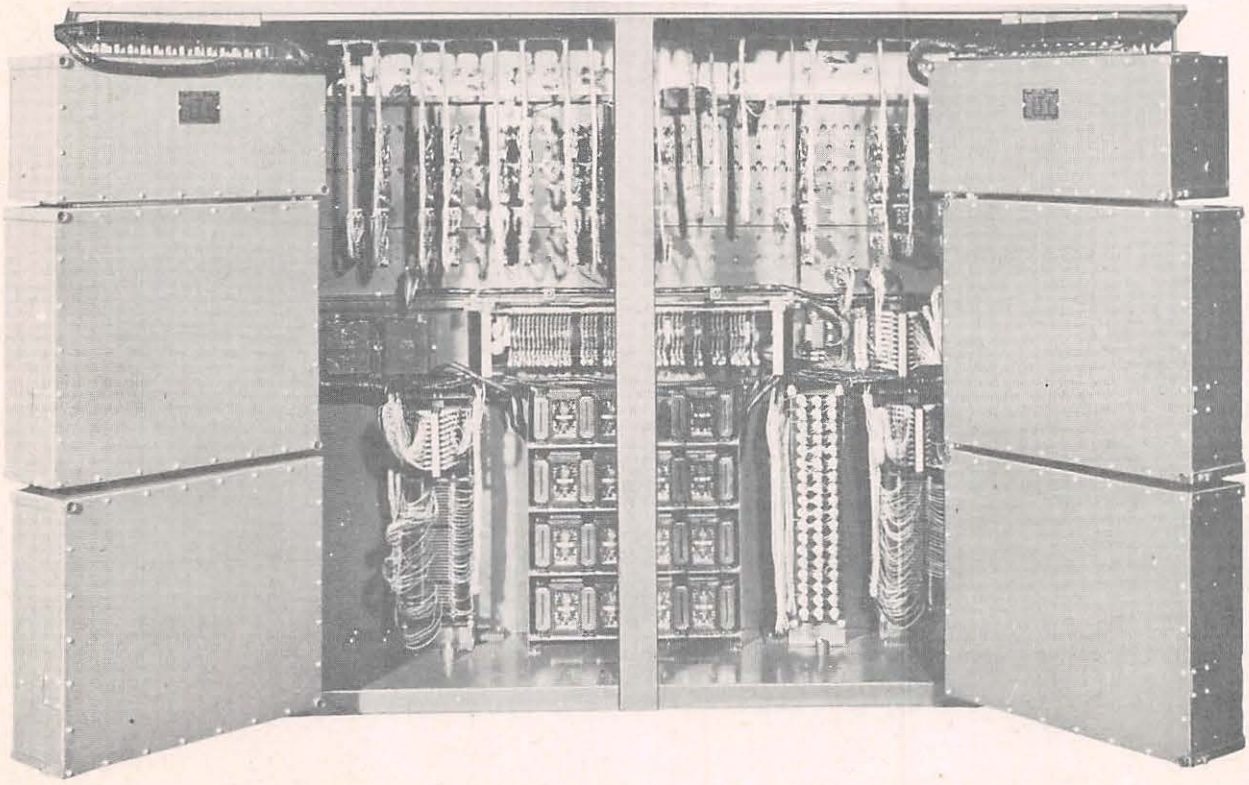

REAR VIEW
(UNITS SWUNG OUT)

7-15-47 CONTROL MACHINE

UNION SWITCH & SIGNAL CO.

CONTROL MACHINE

Orders for Units complete with relays, etc., should state installation for which they are required.

Order by Plate, Piece, Reference and Abbreviated Description Given in Heavy Face Type Only

PIECE	REF.	DESCRIPTION	DWG. REF.
	2	OFFICE LINE CODING UNIT WITH "KP" RELAY. 35 Station Multiple Line Circuit. For Type "L" Form 506 Systems. As shown.	
	2a	OFFICE LINE CODING UNIT WITH "P-4" RELAY. 35 Station Multiple Line Circuit. For Type "L" Form 504 Systems.	
	2b	OFFICE LINE CODING UNIT. 35 Station Basis. For Type "L" Form 502 Systems.	
	2c	OFFICE CONTROL UNIT. 12 Station Basis. For Type "L" System.	
	2d	OFFICE CODING UNIT. 81 Station Basis. For Type "L" Form 501 System.	
	2e	OFFICE CODING UNIT. 27 Station Basis. For Type "L" System.	
	3	OFFICE LINE UNIT. 81 Station Basis. For Type "L" Form 501 System.	
	4	OFFICE STORAGE UNIT.	
	5	STYLE "KP" POLAR RELAY (See Plate T-358)	
	6	STYLE "P-4" POLAR RELAY (See Plate T-346)	
	7	TRAIN GRAPH (See Plates T-452 to T-498 inclusive)	
	8	BELL (See Plate T-590)	
	9	CONNECTING FRAME. Used in multiple unit cabinets (Specify installation for which required).	
	10	MULTIPLE UNIT TERMINAL BOARD (See Plate P-7310).	
	11	LINE TELEPHONE FILTER (See Plate T-581).	
	12	LINE IMPULSE TRANSFORMER (Style "W").....	C-9228-11
	13	CALL DETECTOR UNIT (See Plate T-580)	
	15	STYLE "P-3" POLAR RELAY (See Plate T-345)	
	16	PLUG CONNECTOR for Office Units (See Plate T-520)	
	17	TERMINAL BOARD for Office Units (See Plate T-520)	
	18	RECTIFIER (See Plate T-500)	
	19	SUPPORT for Relays (When ordering state Unit, location (numbering rows from top down) and installation for which required).	

UNION SWITCH & SIGNAL CO.

PIECE	REF.	DESCRIPTION	DWG. REF.
	20	CONDENSER COMPLETE (See Plate T-525)	
	21	RESISTOR UNIT ASSEMBLY (See Plate T-510)	
	+22	DOOR FRAME	
	+22a	GLASS for Door Frame	
	+22b	GASKET for Door Frame	
		+ Orders should state unit for which required and installation.	
	23	LAMP RECTEPACLES, LAMPS, TOGGLE SWITCHES, ETC. (Mounted on front panel) See Plate T-250.	
	24	SWITCH LEVER, SIGNAL LEVER AND CIRCUIT CONTROLLERS (Mounted on front panel) See Plate T-255.	
	25	SPARK ARRESTER UNIT (See Plate T-525).	
	26	TYPE "L" RELAY (See Plate T-300).	
	27	FUSE AND BLOCK (See Plate T-525).	
	28	CIRCUIT COUPLER (For connections between multiple cabinet sections).	

7-15-47

UNION SWITCH & SIGNAL CO.

FIELD UNITS

Orders for Units complete with relays, etc., should state installation for which they are required. When units are ordered for maintenance, order should specify, Unit less plug connectors.

Order by Plate, Piece, Reference and Abbreviated Description Given in Heavy Face Type Only

PIECE	REF.	DESCRIPTION	DWG. REF.
	2	FIELD LINE CODING STORAGE GROUP. 35 Station Multiple Line Circuit. For Type "L" Form 506 Systems as shown.	
	2a	FIELD LINE CODING STORAGE UNIT WITH "P-4" RELAY. 35 Station Multiple Line Circuit. For Type "L" Form 504 Systems.	
	2b	FIELD LINE CODING STORAGE UNIT. 35 Station Basis. For Type "L" Form 502 Systems.	
	2c	FIELD STATION CONTROL UNIT. 12 Station Basis. For Type "L" System.	
	2d	FIELD CODING UNIT. 81 Station Basis. For Type "L" Form 501 System.	
	2e	FIELD CODING UNIT. 27 Station Basis. For Type "L" System.	
	2f	FIELD LINE UNIT. 81 Station Basis. For Type "L" Form 501 System.	
	3	FIELD STORAGE GROUP. 35 Station Multiple Line Circuit. For Type "L" Form 506 Systems as shown	
	3a	FIELD STORAGE UNIT. 35 Station Multiple Line Circuit. For Type "L" Form 504 Systems.	
	3b	FIELD STORAGE UNIT. 35 Station Basis. For Type "L" Form 502 Systems.	
	3c	FIELD STORAGE UNIT. 81 Station Basis. For Type "L" Form 501 System.	
	3d	FIELD STORAGE UNIT. 27 Station Basis. For Type "L" System.	
	4	FIELD PYRAMID UNIT. 35 Station Multiple Line Circuit. For Type "L" Form 506 Systems as shown.	
	5	PLUG CONNECTOR for Field Units (See Plate T-520)	
	6	TERMINAL BOARD for Field Units (See Plate T-520)	
	7	RECTIFIER (See Plate T-500)	
	8	SUPPORT for Relays (When ordering state Unit, location (numbering rows from top down) and installation for which required).	
	9	THERMAL RELAY (See Plate T-525)	
	10	RESISTOR (See Plate T-510)	

UNION SWITCH & SIGNAL CO.

PIECE	REF.	DESCRIPTION	DWG. REF.
176508	11	RUBBER BUTTON.....	8078-1524
	+ 12	DOOR FRAME	
	+ 12a	GLASS for Door Frame	
	+ 12b	GASKET for Door Frame	
		+ Orders should state unit for which required and installation.	
	13	CONDENSER COMPLETE (See Plate T-525)	
	14	SPARK ARRESTER UNIT (See Plate T-525)	
	15	STYLE "L" RELAY (See Plate T-300)	
	16	FUSE AND BLOCK (See Plate T-525)	
	17	STYLE "TH-10" THERMAL RELAY (See Plate E-5225)	

7-15-47

PLATE T-250

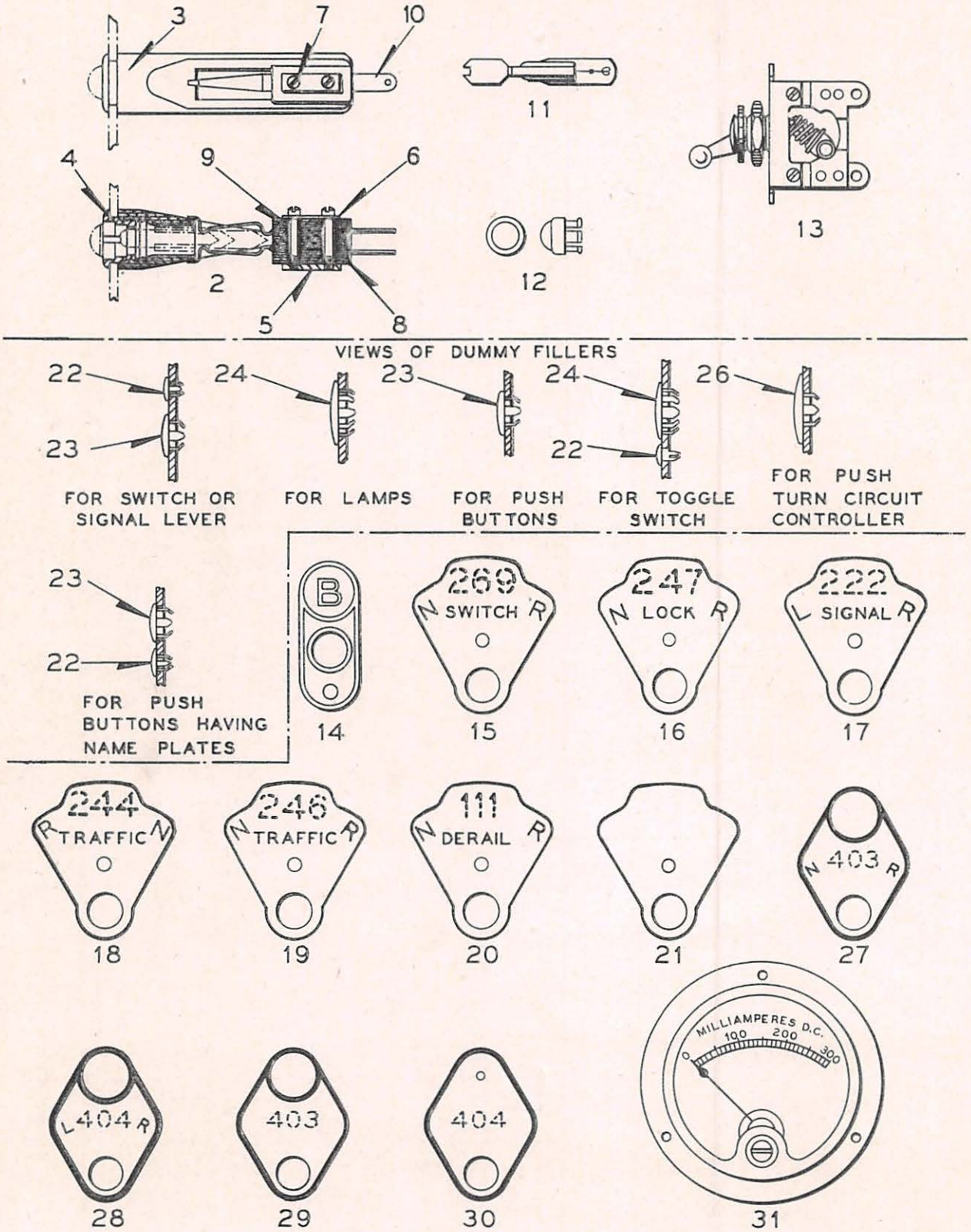

LAMP RECEPTACLES, NAME PLATES, ETC.
(CABINET FRONT PLATE DETAILS)

7-15-47
1-18-43

PLATE T-200

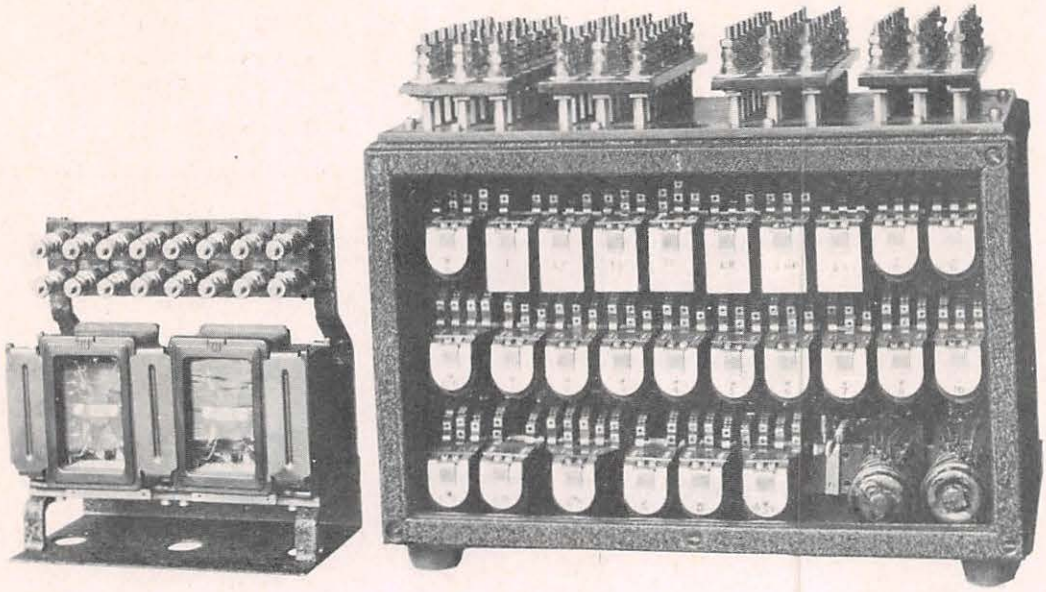

FIELD LINE-CODING-STORAGE GROUP

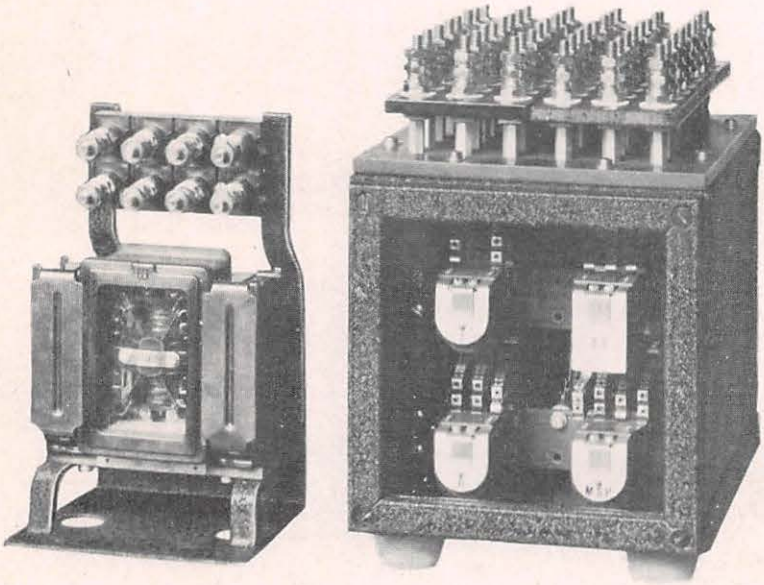

FIELD STORAGE GROUP

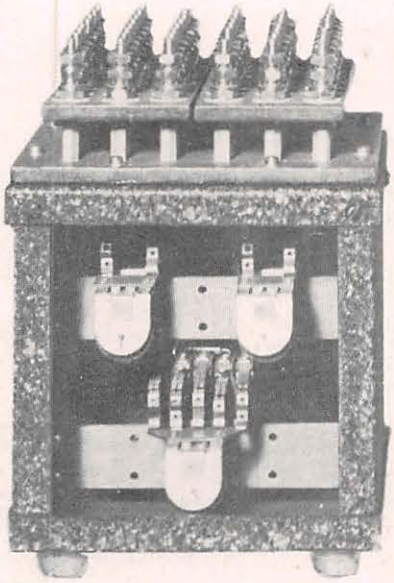

FIELD PYRAMID UNIT

FIELD UNITS

1-18-43

UNION SWITCH & SIGNAL CO.

DETAIL PARTS OF CONTROL MACHINE

MOUNTED ON FRONT PLATE

LAMP RECEPTACLES, LAMPS, TOGGLE SWITCHES AND NUMBER PLATES

Order by Plate, Piece, Reference and Abbreviated Description Given in Heavy Face Type Only

PIECE	REF.	DESCRIPTION	DWG. REF.
154829	2	LAMP RECEPTACLE COMPLETE (Without Lamp or Lamp Cap).....	12522-14
154830	3	LAMP HOLDER ONLY for Ref.2.....	12522-15
154849	4	BUSHING ONLY for Ref.2.....	8350-763
156117	5	WASHER ONLY for Ref.2.....	7828-285
152720	6	WASHER ONLY for Ref.2.....	7828-275
	7	MACHINE SCREW, NO.3-56 x 5/8" Fil.Hd.S. (N.P.) (Used previous to 4/15/44)	
	7a	MACHINE SCREW, NO.3-56 x 1/2" Fil.Hd.S. (N.P.) (Used since 4/15/44)	
152718	8	INSULATION BLOCK (1/16" thick) (Used since 4/15/44).....	8750-3044
174235	8a	INSULATION BLOCK (1/8" thick) (Used previous to 4/15/44).....	8750-2503
175228	9	INSULATION BUSHING (23/64" long) (Used since 4/15/44).....	B-10266-1
154481	9a	INSULATION BUSHING (1/2" long) (Used previous to 4/15/44).....	B-10266-1
154847	10	CONTACT SPRING ONLY for Ref.2.....	8385-2185
	11	SWITCHBOARD LAMP (Specify Voltage)	
150745	12	RED LAMP CAP.....	12522-11
150746	12a	GREEN LAMP CAP.....	12522-11
150747	12b	WHITE LAMP CAP.....	12522-11
155416	12c	AMBER LAMP CAP.....	12522-11
169264	12d	BLUE LAMP CAP.....	12522-11
	13	TOGGLE SWITCH COMPLETE, with Nuts for attaching to Case (Orders should specify where used, number of positions, number of poles and if sealing is required)	
173733	14	PUSH BUTTON ESCUTCHEON PLATE (Orders should specify marking desired).....	8225-400
210435	14a	TOGGLE SWITCH ESCUTCHEON PLATE (Orders should specify marking desired).....	8225-400
244169	15	SWITCH LEVER ESCUTCHEON PLATE (Orders should specify lever number required).....	8225-713

UNION SWITCH & SIGNAL CO.

PIECE	REF.	DESCRIPTION	DWG. REF.
244171	16	LOCK LEVER ESCUTCHEON PLATE (Orders should specify lever number required)	8225-715
244170	17	SIGNAL LEVER ESCUTCHEON PLATE (Orders should specify lever number required)	8225-714
246420	18	TRAFFIC LEVER ESCUTCHEON PLATE (Orders should specify lever number required)	8225-733
246419	19	TRAFFIC LEVER ESCUTCHEON PLATE (Orders should specify lever number required)	8225-732
246421	20	DERAIL LEVER ESCUTCHEON PLATE (Orders should specify lever number required)	8225-734
246418	21	LEVER ESCUTCHEON PLATE (Blank)	8225-731
224926	22	GREEN PLUG	9511-160
224927	22a	BLACK PLUG	9511-160
224928	23	GREEN PLUG	9511-161
224929	23a	BLACK PLUG	9511-161
224930	24	GREEN PLUG	9511-162
224931	24a	BLACK PLUG	9511-162
226534	26	GREEN PLUG	9511-165
226533	26a	BLACK PLUG	9511-165
231326	27	SWITCH LEVER ESCUTCHEON PLATE (Orders should specify lever number required)	8225-606
231327	28	SIGNAL LEVER ESCUTCHEON PLATE (Orders should specify lever number required)	8225-606
231328	28a	SIGNAL LEVER ESCUTCHEON PLATE. With letter "L" only. (Orders should specify lever number required)	8225-606
231329	28b	SIGNAL LEVER ESCUTCHEON PLATE. With letter "R" only. (Orders should specify lever number required)	8225-606
231330	29	LEVER ESCUTCHEON PLATE (Blank) (With light hole)	8225-607
231331	30	LEVER ESCUTCHEON PLATE (Blank) (Without light hole)	8225-607
	31	AMMETER (Orders should specify installation for which desired).	

PLATE T-255

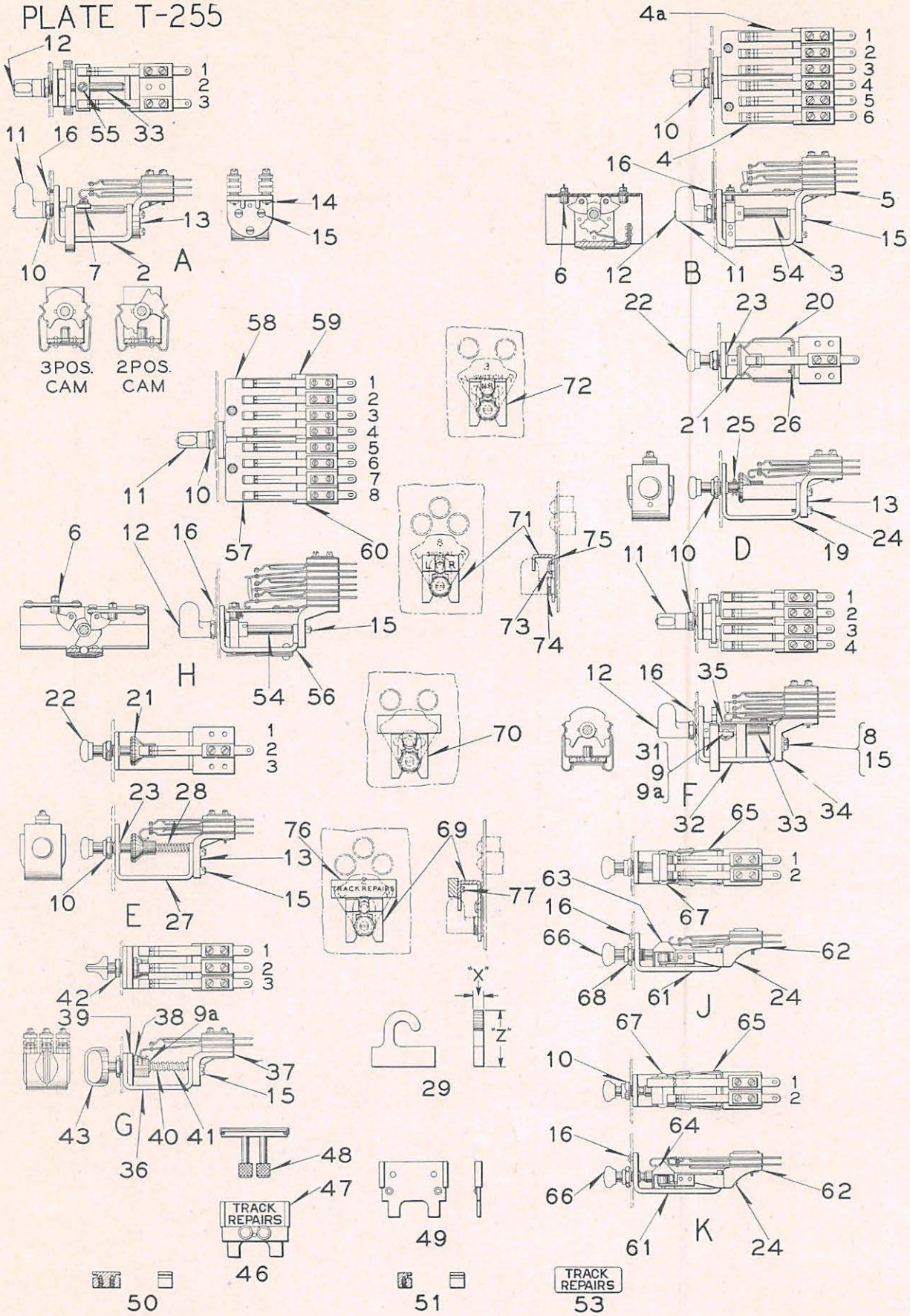

7-15-47

CONTROLLERS AND BLOCKING DEVICES

UNION SWITCH & SIGNAL CO.

DETAIL PARTS OF CONTROL MACHINE

CIRCUIT CONTROLLERS, PUSH BUTTONS AND BLOCKING DEVICES

When ordering complete levers for replacement state installation, nomenclature and exact location on cabinet front plate.
When ordering complete levers not for replacement, state nomenclature, contact combination required for each stack assembly and if blocked in any position.
These levers and push buttons are designed for mounting on 1/16" ± 1/64" panel.
If mounting for thicker panel is desired, orders should specify panel thickness.

ORDER BY PLATE, PIECE, REFERENCE AND ABBREVIATED DESCRIPTION GIVEN IN HEAVY FACE TYPE STATING INSTALLATION FOR WHICH REQUIRED.

PIECE	REF.	DESCRIPTION	DWG. REF.
	A	LEVER CIRCUIT CONTROLLER, 2 or 3 Position (Maximum contact capacity - 2 contact assemblies per Plate T-260).....	B-12670-8
	B	LEVER CIRCUIT CONTROLLER, 2 or 3 Position (Maximum contact capacity - 6 contact assemblies per Plate T-260).....	B-12670-6
	D	PUSH BUTTON CIRCUIT CONTROLLER (Stick Type) (Maximum contact capacity - one contact assembly per Plate T-260).....	B-9918-46
	E	PUSH BUTTON CIRCUIT CONTROLLER (Spring Return) (Maximum contact capacity - one contact assembly per Plate T-260).....	B-9918-47
	F	LEVER CIRCUIT CONTROLLER, 2 or 3 Position (Maximum contact capacity - 4 contact assemblies per Plate T-260).....	B-12670-12
	G	PUSH TURN LEVER CIRCUIT CONTROLLER, 2 or 3 Position (Maximum contact capacity - 3 contact assemblies per Plate T-260).....	B-12670-14
	H	LEVER CIRCUIT CONTROLLER, 2 or 3 Position (Maximum contact capacity - 8 contact assemblies per Plate T-260).....	B-12670-22
	J	PUSH BUTTON CIRCUIT CONTROLLER (Stick Type) (Maximum contact capacity - 2 contact assemblies per Plate T-263).....	B-9918-95
	Ja	PUSH BUTTON CIRCUIT CONTROLLER (Spring Return) (Maximum contact capacity - 2 contact assemblies per Plate T-263).....	B-9918-68
	K	PUSH AND PULL PUSH BUTTON CIRCUIT CONTROLLER (Spring Return (Maximum contact capacity - 2 contact assemblies per Plate T-263).....	B-9918-67
	Ka	PUSH AND PULL PUSH BUTTON CIRCUIT CONTROLLER (Push-Spring Return; Pull-Stick Type) (Maximum contact capacity - 2 contact assemblies per Plate T-263).....	B-9918-96
171774	2	BRACKET COMPLETE for Ref.A.....	10914-323
187360	2a	BRACKET COMPLETE (Drilled for screw for blocking C to R movement; lever can operate from C to L position only) Does not include screw.....	10914-323
215580	2b	BRACKET COMPLETE (Drilled for screw for blocking C to L movement; lever can operate from C to R position only) Does not include screw.....	10914-323
	2c	SCREW Ref.2d with No.10 S.Lock Washer (Tin Pl.) and No.10-32 S.Hex. Nut (Tin Pl.)	
233162	2d	SCREW ONLY.....	8098-1462
171721	3	BRACKET COMPLETE for Ref.B.....	10914-322

UNION SWITCH & SIGNAL CO.

PIECE	REF.	DESCRIPTION	DWG. REF.
187274	3a	BRACKET COMPLETE (Includes Pin for blocking C to R movement; lever can operate from C to L position only)	10914-322
215515	3b	BRACKET COMPLETE (Includes Pin for blocking C to L movement; lever can operate from C to R position only)	10914-322
181321	4	CONTACT ARM COMPLETE (R.H.) with Springs, Stud and Eyelets	8750-2412
166478	4a	CONTACT ARM COMPLETE (L.H.) with Springs, Stud and Eyelets	8750-2412
171451	5	SUPPORT	8750-2477
166905	6	STUD with Nut and Washers. For Refs. 4, 4a, 57 and 58	8114-752
410508	6a	WASHER for Ref.6	
29351	6b	NUT for Ref.6	8109-204
	6c	LOCK WASHER, NO.4 Pl.S. (M) (Tin Pl.)	
160226	7	OPERATING ARM	8750-2328
20686	8	WASHER	7828-108
	9	MACHINE SCREW, NO.6-40 x 5/16" Rd.Hd.Br. (N.P.)	
	9a	LOCK WASHER, NO.6 Pl.S. (M) (Tin Pl.)	
154474	10	BUSHING	8350-760
154473	11	HANDLE	8311-86
	12	MACHINE SCREW, NO.6-40 x 1/2" Fil.Hd.Br. (Chrom.Pl.)	
170982	13	SUPPORT	8750-2476
156117	14	WASHER	7828-285
	15	MACHINE SCREW, NO.6-40 x 3/8" Fil.Hd.S. (N.P.)	
	16	MACHINE SCREW, NO.6-40 x 1/4" Rd.Hd.Br. for attaching Number Plate to Bracket (Head painted black).	
169267	19	BRACKET	10914-313
171484	20	SPRING	8735-742
171421	21	OPERATING ROD COMPLETE	8095-690
154937	22	KNOB	8235-143
154934	23	SPRING	8124-229
	24	MACHINE SCREW, NO.6-40 x 7/16" Fil.Hd.S. (Tin Pl.)	
	25	COTTER PIN, 1/16" x 1/2" Steel (Tin Pl.)	
171261	26	WASHER	7828-285
169266	27	BRACKET	10914-313
171121	28	SPRING	8124-218

UNION SWITCH & SIGNAL CO.

PIECE	REF.	DESCRIPTION	DWG. REF.
103286	29	LEVER TAG (Red) "Z" = 1-1/2", "X" = 1/4"	8988-160
103287	29a	LEVER TAG (White) "Z" = 1-1/2", "X" = 1/4"	8988-160
103284	29b	PUSH BUTTON BLOCKING TAG (Red) "Z" = 1-5/16", "X" = 7/32"	8988-160
103285	29c	PUSH BUTTON BLOCKING TAG (White) "Z" = 1-5/16", "X" = 7/32"	8988-160
239393	29d	PUSH TURN LEVER TAG (White) "Z" = 1-1/4", "X" = 5/32"	8988-187
100510	31	OPERATING ARM COMPLETE	12538-164
100513	32	BRACKET COMPLETE	10914-786
106150	32a	BRACKET COMPLETE (Drilled for screw for blocking C to L movement; lever can operate from C to R position only) Does not include screw	10914-786
106149	32b	BRACKET COMPLETE (Drilled for screw for blocking C to R movement; lever can operate from C to L position only) Does not include screw	10914-786
	32c	SCREW Ref.32d with No.10 S.Lock Washer (Tin Pl.) and No.10-32 S.Hex. Nut (Tin Pl.)	
233163	32d	SCREW ONLY	8098-1462
171775	33	SHAFT	12501-71
100508	34	BRACKET	8750-2781
100507	35	OPERATING ARM COMPLETE	8750-2780
107058	36	BRACKET	10914-1035
107041	37	CONTACT SPRING SUPPORT	12770-15
107040	38	OPERATING CAM COMPLETE	12770-14
107057	39	2-WAY CAM PLATE COMPLETE	9999-1633
107055	39a	3-WAY CAM PLATE COMPLETE	9999-1633
107043	40	SHAFT	12501-142
254332	41	COIL SPRING	7770-622
107060	42	BUSHING	8350-938
107038	43	KNOB COMPLETE (Black)	8235-178
239536	43a	KNOB COMPLETE (Red)	8235-178
109014	46	LEVER BLOCKING DEVICE AND SIGN HOLDER COMPLETE (Without Sign) (Inc.1-47 and 2-48)	B-12763-1
103071	47	SIGN AND LEVER STOP HOLDER	12538-191
103095	48	LEVER STOP	8235-175
109913	49	PUSH TURN LEVER CIRCUIT CONTROLLER BLOCKING DEVICE (Without Sign)	12538-231
102972	50	BLOCKING DEVICE HOLDER (2-Way)	12538-188

UNION SWITCH & SIGNAL CO.

PIECE	REF.	DESCRIPTION	DWG. REF.
102981	51	BLOCKING DEVICE HOLDER (1-Way)	12538-188
	52	MACHINE SCREW, NO.4-48 x 1/4" Rd.Hd.S. (Tin Pl.) with No.4 Pl.S. Lock Washer (1/32" x 1/32") for attaching Refs.50 and 51 to Cabinet (Not shown)	
103030	53	SIGN "TRACK REPAIRS"	8286-140
103031	53a	SIGN "RUSTY RAIL"	8286-140
103032	53b	SIGN "HOLD ORDER"	8286-141
103033	53c	SIGN "INTL. REPAIRS"	8286-141
103034	53d	SIGN "POWER OFF"	8286-141
102615	53e	SIGN (Blank)	8286-140
233173	53f	SIGN "WORK TRAIN"	8286-156
254606	53g	SIGN "MAINT.WORKING"	8286-156
254607	53h	SIGN "CARS IN SIDING"	8286-156
254608	53j	SIGN "BROKEN RAIL"	8286-165
254609	53k	SIGN "END OF CTC"	8286-165
171453	54	SHAFT	12501-69
	55	MACHINE SCREW, NO.6-40 x 3/8" Rd.Hd.Br. (N.P.) with Washer Ref.8 and Lock Washer Ref.9a	
263846	56	BRACKET COMPLETE	10914-1942
263856	57	CONTACT ARM COMPLETE (R.H.) with Springs, Stud and Eyelets	8750-2411
263855	58	CONTACT ARM COMPLETE (L.H.) with Springs, Stud and Eyelets	8750-2411
263851	59	L.H. CONTACT SPRING SUPPORT	12770-61
263852	60	R.H. CONTACT SPRING SUPPORT	12770-61
106116	61	SUPPORT BRACKET	10914-880
102624	62	SUPPORT	8750-2832
249995	63	OPERATING SHAFT COMPLETE for Ref.J	8750-3191
102625	63a	OPERATING SHAFT COMPLETE for Ref.Ja	8750-2833
250650	64	OPERATING SHAFT COMPLETE for Ref.K	8750-3195
250790	64a	OPERATING SHAFT COMPLETE for Ref.Ka	8750-3196
102634	65	OPERATING SPRING COMPLETE (Without Roller)	8735-867
250651	66	KNOB for Refs.J, K and Ka	8235-173
249750	66a	KNOB for Ref.Ja	8235-173

UNION SWITCH & SIGNAL CO.

PIECE	REF.	DESCRIPTION	DWG. REF.
102628	67	ROLLER	8072-853
102642	68	BUSHING for Refs.J and Ja	8350-906
268157	69	LEVER BLOCK COMPLETE with Lettering Block. For locking Signal Lever in center position	12511-10
268483	69a	LEVER BLOCK COMPLETE with Lettering Block. For preventing Signal Lever being operated to left position	12511-10
268485	69b	LEVER BLOCK COMPLETE with Lettering Block. For preventing Signal Lever being operated to right position	12511-10
268487	70	LEVER BLOCK COMPLETE with Lettering Block. For preventing Switch Lever being operated from either normal or reverse position	12511-10
268346	71	LEVER BLOCK COMPLETE. For locking Signal Lever in center position	12511-9
268347	71a	LEVER BLOCK COMPLETE. For preventing Signal Lever being operated to left position	12511-9
268348	71b	LEVER BLOCK COMPLETE. For preventing Signal Lever being operated to right position	12511-9
268349	72	LEVER BLOCK COMPLETE. For preventing Switch Lever being operated from either normal or reverse position	12511-9
268153	73	STUD	8114-1102
268154	74	BUSHING	8350-1058
268352	75	PLATE	12538-309
268155	76	LETTERING BLOCK	8988-215
	77	MACHINE SCREW, NO.3-56 x 3/16" Fil.Hd.S. (Tin Pl.)	

PLATE T-260

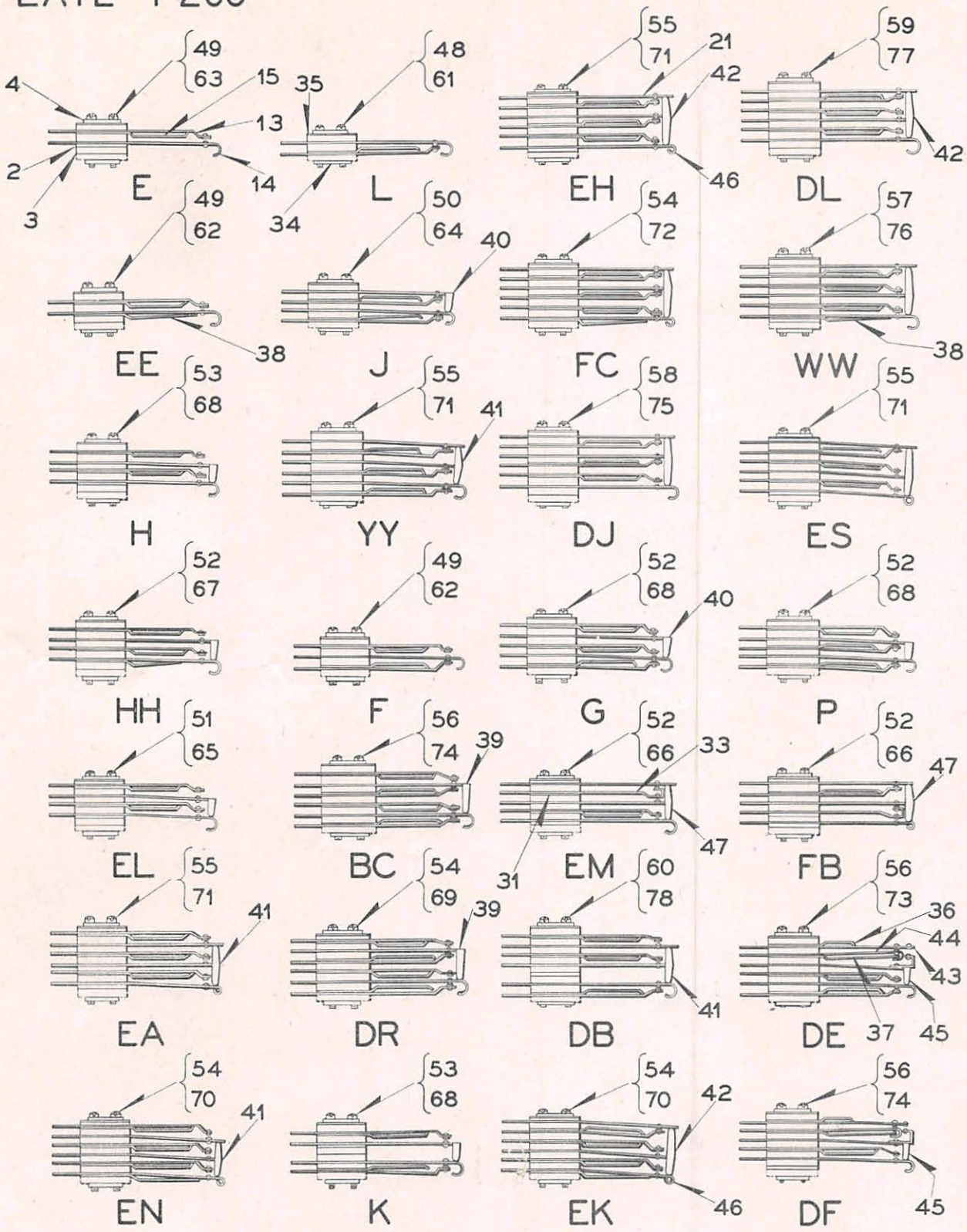

7-15-47

CONTACT SPRING STACKS FOR
SIGNAL AND SWITCH LEVERS
AND PUSH BUTTON CIRCUIT CONTROLLERS

UNION SWITCH & SIGNAL CO.

CONTACT SPRING DIAGRAMS AND FITTINGS FOR SIGNAL LEVER, SWITCH LEVER AND PUSH BUTTON CIRCUIT CONTROLLERS.

Construction of contact assemblies is shown in detail to permit the ordering of assemblies by code letter or the building of assemblies from parts in the field.

Order by Plate, Piece, Reference and Abbreviated Description Given in Heavy Face Type Only

CONTACT STACK COMPLETE			
PIECE	STACK REF.	CONTACT DESCRIPTION	DWG.REF.
241854	E	1 Front	B-12670-5
174632	F	1 Transfer	B-12670-5
206293	G	1 Front and 1 Transfer	B-12670-5
236518	H	2 Front	B-12670-5
237887	J	2 Back	B-12670-5
241855	K	1 Front and 1 Back	B-12670-5
241856	L	1 Back	B-12670-5
174633	P	1 Transfer and 1 Back	B-12670-5
234062	BC	2 Transfer	B-12670-5
241859	DB	2 Front and 1 Back	B-12670-9
237103	DE	1 Transfer and 1 Continuity	B-12670-16
241865	DF	1 Continuity and 1 Front	B-12670-16
241868	DJ	2 Back and 1 Front	B-12670-16
241870	DL	2 Front and 1 Back	B-12670-16
241874	DR	2 Transfer	B-12670-17
241881	EA	3 Front	B-12670-21
241857	EE	1 Front	B-12670-5
241886	EH	1 Front and 2 Back	B-12670-23
244010	EK	2 Front and 1 Back	B-12670-21
244247	EL	2 Front	B-12670-23
244691	EM	1 Front and 1 Transfer	B-12670-23
244824	EN	3 Front	B-12670-23
245863	ES	2 Front and 1 Back	B-12670-25

UNION SWITCH & SIGNAL CO.

CONTACT STACK COMPLETE (cont'd.)			
PIECE	STACK REF.	CONTACT DESCRIPTION	DWG.REF.
258459	FB	1 Transfer and 1 Back	B-12670-26
258460	FC	1 Front and 2 Back	B-12670-26
174634	HH	2 Front	B-12670-5
241863	WW	2 Front and 1 Back	B-12670-9
234063	YY	3 Back	B-12670-9

PIECE	REF.	DESCRIPTION	DWG.REF.
152718	2	INSULATION (1/16" thick)	8750-3044
174235	3	INSULATION (1/8" thick)	8750-2503
152720	4	WASHER	7828-275
152725	13	FRONT OR BACK CONTACT SPRING COMPLETE	8385-2166
152728	14	CONTACT SPRING, curved heel	8385-2167
152726	15	CONTACT SPRING STOP	8385-2166
173103	21	CONTACT SPRING	8385-2290
210992	31	WASHER, .032" thick	7828-275
226486	33	FRONT AND BACK CONTACT SPRING	8385-2719
156117	34	WASHER	7828-285
239921	35	INSULATION (1/64" thick)	8750-1460
182145	36	CONTACT SPRING STOP	8385-2344
182146	37	CONTACT SPRING STOP	8385-2345
246749	38	CONTACT SPRING STOP	8385-2345
245100	39	CONTACT SPRING COMPLETE, Heel with insulated long tip, molded type	8385-2790
245099	40	CONTACT SPRING COMPLETE, Heel with insulated short tip, molded type	8385-2790
245101	41	CONTACT SPRING COMPLETE, Heel with insulated regular T-tip, molded type	8385-2790
245102	42	CONTACT SPRING COMPLETE, Heel with insulated offset T-tip, molded type	8385-2790
182148	43	CONTINUITY CONTACT SPRING COMPLETE, flat upper spring	8385-2346
182150	44	CONTINUITY CONTACT SPRING COMPLETE, middle spring	8385-2347
245104	45	CONTINUITY CONTACT SPRING COMPLETE, lower spring, molded tip	8385-2790
244009	46	CONTACT SPRING COMPLETE, curled heel	8385-2782

UNION SWITCH & SIGNAL CO.

PIECE	REF.	DESCRIPTION	DWG. REF.
245097	47	CONTACT SPRING COMPLETE, Heel with insulated regular T-tip, molded type.....	8385-2790

MACHINE SCREW, NO.3-56 x ____ Fil.Hd.S. (Tin Pl.)

PIECE	REF.	LENGTH	FOR CONTACT STACKS
	48	9 /16"	L
	49	3/4"	E, F, EE
	50	7/8"	J
	51	1-1/32"	EL
	52	1-1/16"	G, P, EM, FB, HH
	53	1-3/32"	H, K
	54	1-3/16"	DR, EK, EN, FC
	55	1-7/32"	EA, EH, ES, YY
	56	1-1/4"	BC, DE, DF
	57	1-5/16"	WW
	58	1-9/32"	DJ
	59	1-11/32"	DL
	60	1-13/32"	DB

EXTRUDED PLASTIC BUSHING

PIECE	REF.	LENGTH	FOR CONTACT STACKS	DWG.REF.
245044	61	29/64"	L	B-10266-1
245045	62	5/8"	F, EE	B-10266-1
152733	63	41/64"	E	B-10266-1
245047	64	49/64"	J	B-10266-1
183812	65	57/64"	EL	B-10266-1
160471	66	59/64"	EM, FB	B-10266-1
245046	67	15/16"	HH	B-10266-1
168557	68	61/64"	G, H, K, P	B-10266-1
169144	69	1-3/64"	DR	B-10266-1
239757	70	1-1/16"	EK, EN	B-10266-1
160299	71	1-3/32"	EA, EH, ES, YY	B-10266-1
160283	72	1-5/64"	FC	B-10266-1
152736	73	1-7/64"	DE	B-10266-1
239756	74	1-1/8"	BC, DF	B-10266-1

UNION SWITCH & SIGNAL CO.

EXTRUDED PLASTIC BUSHING (cont'd.)				
PIECE	REF.	LENGTH	FOR CONTACT STACKS	DWG.REF.
237174	75	1-5/32"	DJ	B-10266-1
183766	76	1-3/16"	WW	B-10266-1
231071	77	1-7/32"	DL	B-10266-1
245048	78	1-9/32"	DB	B-10266-1

PLATE T-263

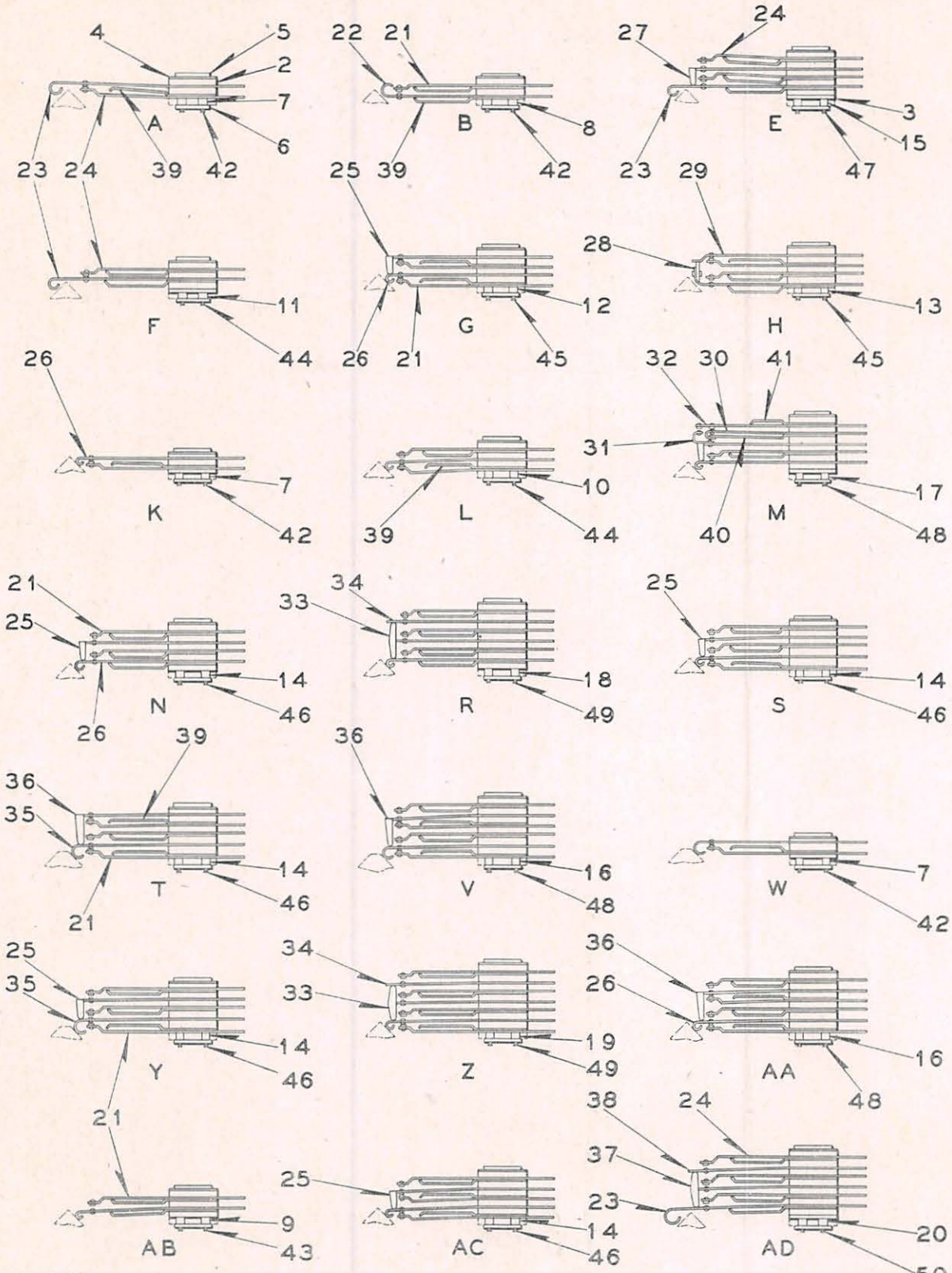

7-15-47

CONTACT SPRING STACKS

UNION SWITCH & SIGNAL CO.

CONTACT SPRING DIAGRAMS AND FITTINGS FOR PUSH BUTTON CIRCUIT CONTROLLERS

Construction of contact assemblies is shown in detail to permit the ordering of assemblies by code letter or the building of assemblies from parts in the field.

Order by Plate, Piece, Reference and Abbreviated Description Given in Heavy Face Type Only

CONTACT STACK COMPLETE			
PIECE	STACK REF.	CONTACT DESCRIPTION	DWG.REF.
242326	A	1 Normal Closed Pull	B-9918-73
106449	B	1 Normal Open Push	B-9918-73
242329	E	2 Normal Open Pull	B-9918-73
242330	F	1 Normal Open Pull	B-9918-73
242331	G	2 Normal Closed Push	B-9918-73
242332	H	1 Normal Open and 1 Normal Closed Push	B-9918-73
242334	K	1 Normal Closed Push	B-9918-73
242335	L	1 Normal Open and 1 Normal Closed Push	B-9918-73
236989	M	2 Normal Open and 1 Normal Closed Push	B-9918-73
242336	N	2 Normal Open Push	B-9918-73
249248	R	3 Normal Open Push	B-9918-73A
246728	S	2 Normal Open and 1 Normal Closed Push	B-9918-73A
250054	T	1 Normal Open and 2 Normal Closed Push	B-9918-73A
250295	V	2 Normal Open and 2 Normal Closed Push	B-9918-73A
250883	W	1 Normal Closed Push	B-9918-73A
250885	Y	2 Normal Open and 1 Normal Closed Push	B-9918-73A
253817	Z	3 Normal Open and 1 Normal Closed Push	B-9918-73A
258691	AA	2 Normal Open and 2 Normal Closed Push	B-9918-73A
262792	AB	1 Normal Open Push	B-9918-73A
262793	AC	1 Normal Open and 2 Normal Closed Push	B-9918-73A
262794	AD	3 Normal Open Pull	B-9918-73B

UNION SWITCH & SIGNAL CO.

PIECE	REF.	DESCRIPTION	DWG. REF.
174235	2	INSULATION (1/8" thick)	8750-2503
152718	3	INSULATION (1/16" thick)	8750-3044
239921	4	INSULATION (1/64" thick)	8750-1460
102644	5	WASHER	7828-402
156117	6	WASHER	7828-285

EXTRUDED PLASTIC BUSHING

PIECE	REF.	LENGTH	FOR CONTACT STACKS	DWG.REF.
152732	7	15/32"	A, K, W	B-10266-1
154481	8	1/2"	B	B-10266-1
245045	9	5/8"	AB	B-10266-1
152733	10	41/64"	L	B-10266-1
168690	11	11/16"	F	B-10266-1
152734	12	51/64"	G	B-10266-1
210975	13	53/64"	H	B-10266-1
168557	14	61/64"	N, S, T, Y, AC	B-10266-1
239874	15	1-1/64"	E	B-10266-1
239756	16	1-1/8"	V, AA	B-10266-1
161280	17	1-9/64"	M	B-10266-1
231071	18	1-7/32"	R	B-10266-1
173926	19	1-17/64"	Z	B-10266-1
262540	20	1-5/16"	AD	B-10266-1

PIECE	REF.	DESCRIPTION	DWG.REF.
152725	21	CONTACT SPRING COMPLETE, front or back (Push contacts)	8385-2166
102651	22	CONTACT SPRING COMPLETE, curved heel (Push contacts)	8385-2545
240791	23	CONTACT SPRING COMPLETE, curved heel (Pull contacts)	8385-2546
240793	24	CONTACT SPRING COMPLETE, front or back (Pull contacts)	8385-2777
245099	25	CONTACT SPRING COMPLETE, heel with insulated short tip (molded type). (Push contacts)	8385-2790
244009	26	CONTACT SPRING COMPLETE, curved heel (Push contacts)	8385-2782
253873	27	CONTACT SPRING COMPLETE, heel with insulated short tip (molded type) (Pull contacts)	8385-2807
102729	28	CONTACT SPRING COMPLETE, heel with insulated tip (Push contacts)	8385-2549
102732	29	CONTACT SPRING COMPLETE, offset heel (Push contacts)	8385-2548

UNION SWITCH & SIGNAL CO.

PIECE	REF.	DESCRIPTION	DWG. REF.
182150	30	CONTINUITY CONTACT SPRING COMPLETE, middle spring.....	8385-2347
245104	31	CONTINUITY CONTACT SPRING COMPLETE, lower spring, molded tip.	8385-2790
182148	32	CONTINUITY CONTACT SPRING COMPLETE, flat upper spring.....	8385-2346
245101	33	CONTACT SPRING COMPLETE, heel with insulated regular T-tip, molded type (Push contacts).....	8385-2790
173103	34	CONTACT SPRING COMPLETE, flat heel (Push contacts).....	8385-2290
152728	35	CONTACT SPRING COMPLETE, curved heel (Push contacts).....	8385-2167
245100	36	CONTACT SPRING COMPLETE, heel with insulated long tip, molded type (Push contacts).....	8385-2790
262875	37	CONTACT SPRING COMPLETE, heel with insulated regular T-tip, molded type (Pull contacts).....	8385-2807
262877	38	CONTACT SPRING COMPLETE, flat heel (Pull contacts).....	8385-2849
152726	39	CONTACT SPRING STOP.....	8385-2166
182146	40	CONTACT SPRING STOP.....	8385-2345
182145	41	CONTACT SPRING STOP.....	8385-2344

MACHINE SCREW, NO.3-56 x ____ Flat Hd.S. (Tin Pl.)

PIECE	REF.	LENGTH	FOR CONTACT STACKS
	42	11/16"	A, B, K, W
	43	13/16"	AB
	44	7/8"	F, L
	45	1"	G, H
	46	1-1/8"	N, S, T, Y, AC
	47	1-3/16"	E
	48	1-5/16"	M, V, AA
	49	1-7/16"	R, Z
	50	1-1/2"	AD

PLATE T-300

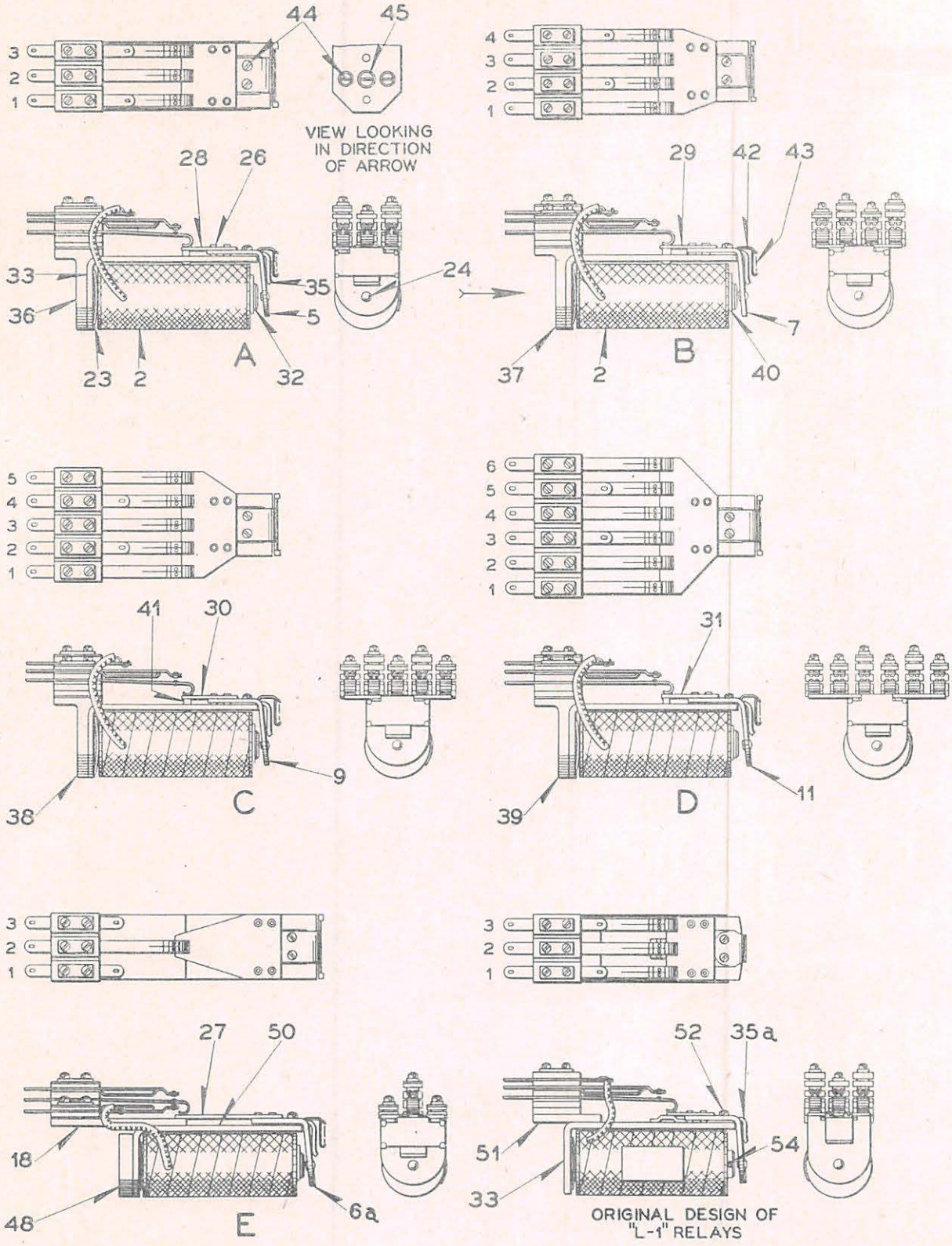

7-15-47

STYLE "L-1", "L-2" AND "L-3" RELAYS

PLATE T-300

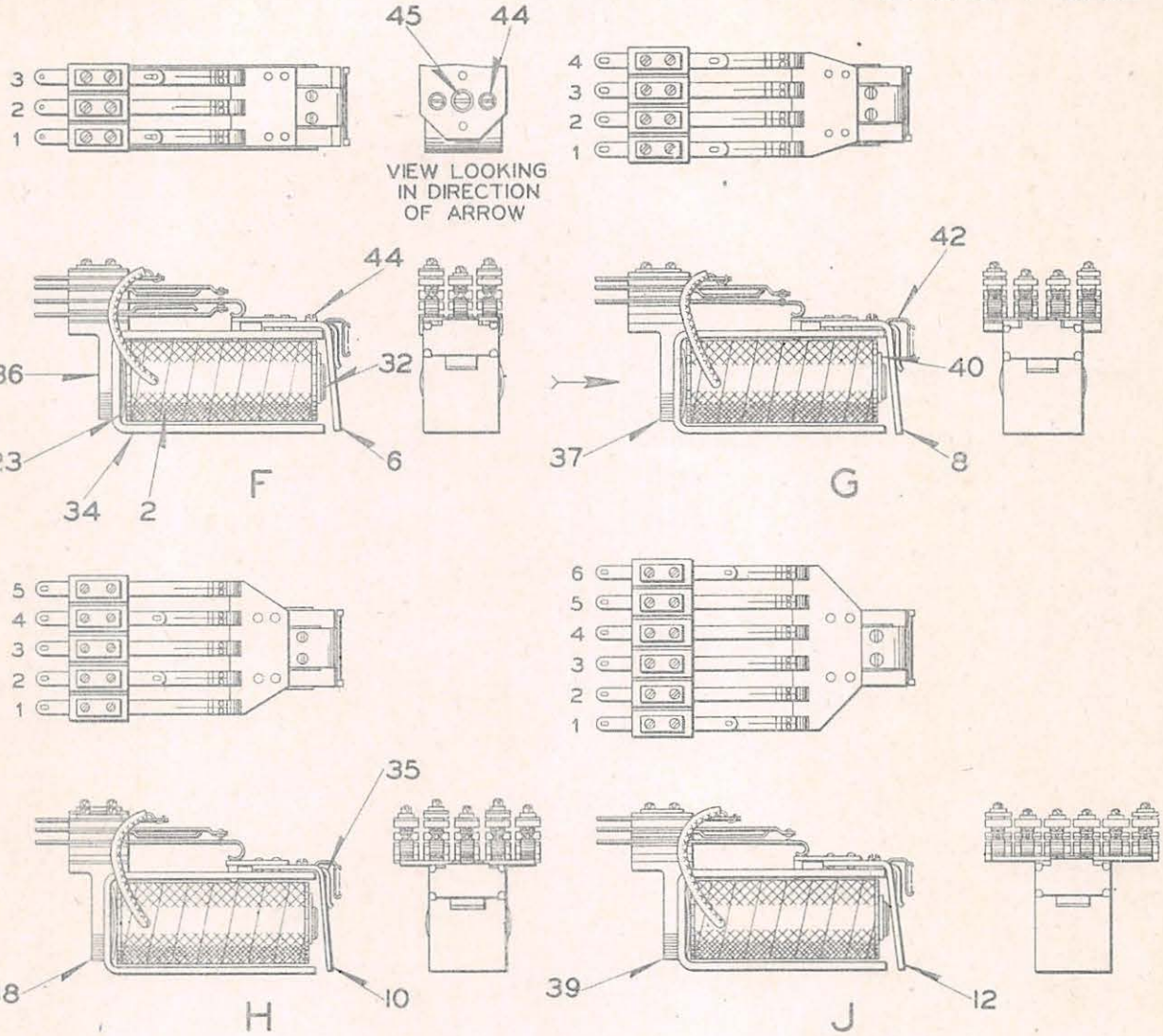

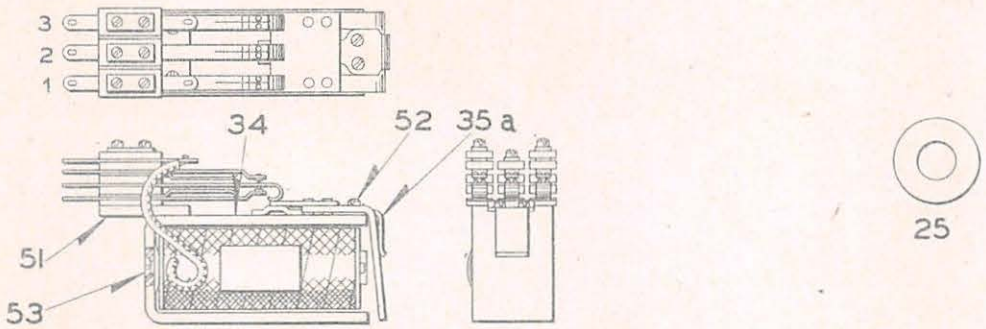

ORIGINAL DESIGN OF
"L-3" RELAYS

7-15-47

STYLE "L-1", "L-2" AND "L-3" RELAYS

UNION SWITCH & SIGNAL CO.

STYLE "L-1", "L-2" and "L-3" RELAYS

When ordering replacement relays, give relay nomenclature and the installation for which required; also when possible, give the piece number stamped on upper face of the backstrap. When ordering relays not for replacement, state contact and battery requirements. Also, state nomenclature required for stamping on nomenclature tag. In stating contact requirements, specify in terms of assemblies shown on Plate T-310. When adding stacks to Relays, the maximum relay calibration should not be exceeded.

ORDER BY PLATE, PIECE, REFERENCE AND ABBREVIATED DESCRIPTION GIVEN IN HEAVY FACE TYPE ONLY EXCEPT AS NOTED ABOVE.

PIECE	REF.	DESCRIPTION	DWG. REF.
	A	3-WAY STYLE "L-1" RELAY	
	B	4-WAY STYLE "L-1" RELAY	
	C	5-WAY STYLE "L-1" RELAY	
	D	6-WAY STYLE "L-1" RELAY	
	E	3-WAY STYLE "L-2" RELAY (Time Code Line Relay)	
	F	3-WAY STYLE "L-3" RELAY (Slow Acting)	
	G	4-WAY STYLE "L-3" RELAY (Slow Acting)	
	H	5-WAY STYLE "L-3" RELAY (Slow Acting)	
	J	6-WAY STYLE "L-3" RELAY (Slow Acting)	
174998	2	COIL, 20-Ohms	8133-382
156057	2a	COIL, 31-Ohms	8133-382
156056	2b	COIL, 48-Ohms	8133-382
152761	2c	COIL, 72-Ohms	8133-382
163000	2d	COIL, 112-Ohms	8133-382
163001	2e	COIL, 175-Ohms	8133-382
152762	2f	COIL, 280-Ohms	8133-382
161796	2g	COIL, 425-Ohms	8133-382
228798	2h	COIL, 58-200-Ohms	8133-525
251313	2j	COIL, 85-85-Ohms	8133-525
245806	2k	COIL, 200-35-Ohms	8133-525
251123	2m	COIL, 200-85-Ohms	8133-525
224594	2n	COIL, 350-85-Ohms	8133-525
226164	2p	COIL, 500-130-Ohms	8133-537
163282	2q	COIL, 750-Ohms	8133-382

UNION SWITCH & SIGNAL CO.

PIECE	REF.	DESCRIPTION	DWG. REF.
185954	5	3-WAY ROUND ARMATURE COMPLETE with Insulation, Rivets and Stop Pin (unfiled) for "L-1" Relays	8157-355
156361	6	3-WAY SQUARE ARMATURE COMPLETE with Insulation, and Rivets for "L-3" Relays	8157-363
185955	6a	1-WAY ROUND ARMATURE COMPLETE with Insulation, Rivets and Stop Pin (unfiled) for "L-2" Relays	8157-355
185956	7	4-WAY ROUND ARMATURE COMPLETE with Insulation, Rivets and Stop Pin (unfiled) for "L-1" Relays	8157-355
161642	8	4-WAY SQUARE ARMATURE COMPLETE with Insulation and Rivets for "L-3" Relays	8157-363
185957	9	5-WAY ROUND ARMATURE COMPLETE with Insulation, Rivets and Stop Pin (unfiled) for "L-1" Relays	8157-355
161970	10	5-WAY SQUARE ARMATURE COMPLETE with Insulation and Rivets for "L-3" Relays	8157-363
185958	11	6-WAY ROUND ARMATURE COMPLETE with Insulation, Rivets and Stop Pin (unfiled) for "L-1" Relays	8157-355
161860	12	6-WAY SQUARE ARMATURE COMPLETE with Insulation and Rivets for "L-3" Relays	8157-363
152755	18	3-WAY BASE PLATE for "L-2" Relays	11893-435
175630	23	WASHER, Steel Spring	7828-374
107998	24	STOP PIN for "L-1" and "L-2" Relay Armatures	8097-720
209337	25	WASHER, Copper (Used between Washer Ref.23 and Backstrap) (For Chain Relays)	7828-176
241993	26	TUBULAR RIVET, for attaching armature insulation to armature	12579-7
152741	27	1-WAY ARMATURE INSULATION, 3/32" thick	8750-2320
152737	28	3-WAY ARMATURE INSULATION, 3/32" thick	8750-2321
152738	29	4-WAY ARMATURE INSULATION, 3/32" thick	8750-2321
152739	30	5-WAY ARMATURE INSULATION, 3/32" thick	8750-2321
152740	31	6-WAY ARMATURE INSULATION, 3/32" thick	8750-2321
161589	32	CORE, 1/2" diameter pole face	8101-304
257916	32a	CORE AND COIL RETAINER COMPLETE (Inc.1-32 and 1-40)	8101-304
183234	32b	CORE, undercut, 1/2" diameter pole face	8101-359
257917	32c	CORE AND COIL RETAINER COMPLETE (Inc.1-32b and 1-40)	8101-359
209194	32d	CORE, undercut, 1" diameter pole face	8101-346
169124	32e	CORE, 1" diameter pole face	8101-346
248639	*33	BACKSTRAP with Pin Ref.41 for "L-1" Relays	8162-226

UNION SWITCH & SIGNAL CO.

PIECE	REF.	DESCRIPTION	DWG. REF.
248638	*34	BACKSTRAP with Pin Ref.41 for "L-3" Relays.....	8162-228
		* Can be used with either the present T-Section Stack Plates or original flat Stack Plates; if for replacement on Relay with original one piece Armature Stop, Pin Ref.41 must be removed. If replacing a backstrap having a countersunk hole, one of three alternatives may be followed: (1) Countersink clearance hole of Ref.33 or 34. (2) Use Backstrap Ref.33 or 34 without countersinking clearance hole and use Mounting Plate Ref.48 and Screws Refs.44 and 46. (3) Use Backstrap Ref.33 or 34 without countersinking clearance hole and use necessary T-Section Stack Plate and Screws Refs. 44 and 45.	
152756	35	ARMATURE STOP.....	11893-432
246229	35a	ARMATURE STOP, PIN AND SCREWS (Inc.1-35, 1-41 and 2-44) For changing Relays built with one piece stop to have a two piece stop.....	11893-432
245073	36	3-WAY T-SECTION STACK PLATE.....	10914-1644
245074	37	4-WAY T-SECTION STACK PLATE.....	10914-1644
245075	38	5-WAY T-SECTION STACK PLATE.....	10914-1644
245076	39	6-WAY T-SECTION STACK PLATE.....	10914-1644
248405	40	COIL RETAINER.....	8124-279
248600	41	PIN.....	8097-957
245081	42	TAG HOLDER.....	11893-1032
245800	43	TAG, Blank (If marked tags are desired, specify markings).....	8988-193
	44	MACHINE SCREW, NO.6-40 x 3/16" Fil.Hd.S. (Tin Pl.)	
	45	MACHINE SCREW, NO.10-30 x 1/2" Fil.Hd.S. (Tin Pl.)	
	46	MACHINE SCREW, NO.10-30 x 3/4" Flat Hd.S. (Tin Pl.) For attaching Mounting Plate Ref.48 to Backstrap Ref.50 and Core (Not shown)	
	47	MACHINE SCREW, NO.6-40 x 1/4" Fil.Hd.S. (Tin Pl.) For attaching Mounting Plate Ref.48 to Backstrap Ref.50 (Not shown)	
243865	48	MOUNTING PLATE.....	9999-2054
	49	MACHINE SCREW, NO.6-40 x 1/4" Flat Hd.S. (N.P.) For attaching Base Plate Ref.18 to Backstrap (Not shown)	
255827	50	BACKSTRAP for Style "L-2" Relays.....	8162-226
152751	51	3-WAY FLAT STACK PLATE.....	11893-434
152752	51a	4-WAY FLAT STACK PLATE.....	11893-434
152753	51b	5-WAY FLAT STACK PLATE.....	11893-434
152754	51c	6-WAY FLAT STACK PLATE.....	11893-434
	52	MACHINE SCREW, NO.6-40 x 5/32" Fil.Hd.S. (Tin Pl.) for attaching original one piece armature stop to backstrap.	

UNION SWITCH & SIGNAL CO.

PIECE	REF.	DESCRIPTION	DWG. REF.
	53	MACHINE SCREW, NO.10-30 x 5/8" Flat Hd.S. (Tin Pl.) for attaching Backstrap having countersunk hole for core screw to core.	
	54	COTTER PIN, 1/16" x 3/4" Stainless Steel. For use with original cores having drilled hole.	

7-15-47

PLATE T-310

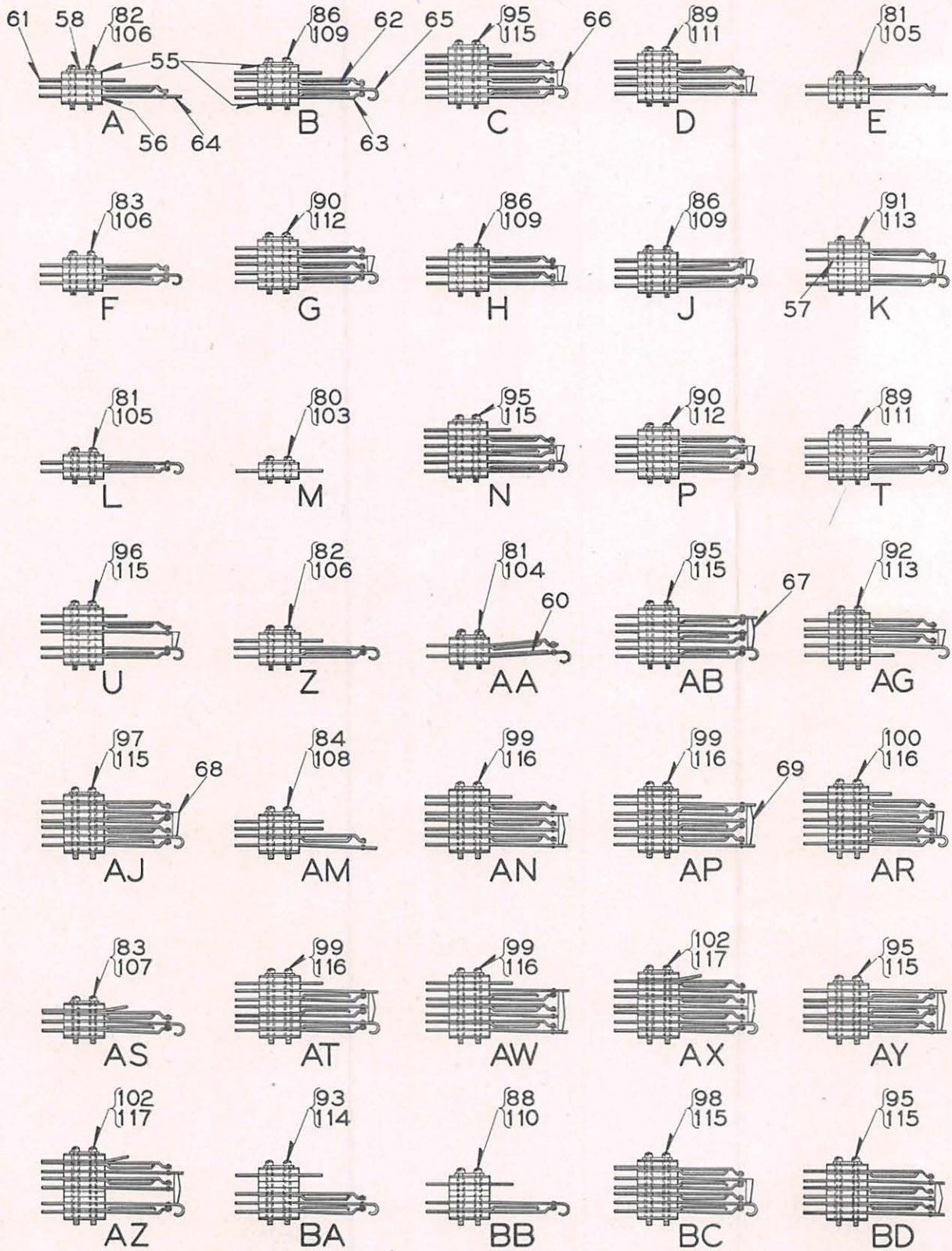

7-15-47

CONTACT SPRING STACKS FOR STYLE "L" RELAYS

UNION SWITCH & SIGNAL CO.

CONTACT SPRING STACKS AND DETAIL PARTS FOR STYLE "L-1", "L-2" AND "L-3" RELAYS

Order by Plate, Piece, Reference and Abbreviated Description Given in Heavy Face Type Only

CONTACT STACK COMPLETE			
PIECE	STACK REF.	CONTACT DESCRIPTION	DWG.REF.
168498	A	Coil Connector and 1 Front	B-12660-4
168499	B	Coil Connector and 1 Transfer	B-12660-4
175090	C	Coil Connector, 1 Front and 1 Transfer	B-12660-4
171122	D	Coil Connector and 2 Front	B-12660-4
190196	E	1 Front	B-12660-4
168500	F	1 Transfer	B-12660-4
168501	G	1 Front and 1 Transfer	B-12660-4
171123	H	2 Front	B-12660-4
168502	J	2 Back	B-12660-4
221076	K	1 Front and 1 Back	B-12660-4
185048	L	1 Back	B-12660-4
190197	M	Coil Connector	B-12660-4
190198	N	Coil Connector, 1 Transfer and 1 Back	B-12660-4
190199	P	1 Transfer and 1 Back	B-12660-4
190203	T	Coil Connector and 2 Back	B-12660-11
190204	U	Coil Connector, 1 Front and 1 Back	B-12660-11
190209	Z	Coil Connector and 1 Back	B-12660-11
190210	AA	1 Front	B-12660-11
190211	AB	3 Back	B-12660-21
190214	AG	Coil Connector and 2 Front	B-12660-21

7-15-47

PLATE T-310 —(CONTINUED)

UNION SWITCH & SIGNAL CO.

PIECE	REF.	DESCRIPTION	DWG. REF.
152728	65	CONTACT SPRING COMPLETE, Curved Heel	8385-2167
245099	66	CONTACT SPRING COMPLETE, Heel with insulated short tip, molded type	8385-2790
245101	67	CONTACT SPRING COMPLETE, Heel with insulated regular T-tip, molded type	8385-2790
245100	68	CONTACT SPRING COMPLETE, Heel with insulated long tip, molded type	8385-2790
245102	69	CONTACT SPRING COMPLETE, Heel with insulated offset T-tip, molded type	8385-2790
182145	70	CONTINUITY CONTACT STOP, upper	8385-2344
182146	71	CONTINUITY CONTACT STOP, lower	8385-2345
182148	72	CONTINUITY CONTACT SPRING COMPLETE, flat upper spring	8385-2346
182150	73	CONTINUITY CONTACT SPRING COMPLETE, middle spring	8385-2347
217173	74	CONTINUITY CONTACT SPRING COMPLETE, lower spring	8385-2348
245104	75	CONTINUITY CONTACT SPRING COMPLETE, lower spring, molded tip.	8385-2790
183240	76	CONTACT SPRING	8385-2354
246749	77	STOP SPRING	8385-2345
182207	78	CONTACT SPRING COMPLETE	8385-2348
	79	EXTRUDED PLASTIC BUSHING MATERIAL, in 3-foot lengths (CN774008) (Not shown)	

EXTRUDED PLASTIC BUSHING

PIECE	REF.	LENGTH	FOR CONTACT STACKS	DWG.REF.
152731	80	19/64"	M	B-10266-1
152732	81	15/32"	E, L, AA, BR	B-10266-1
161846	82	39/64"	A, Z, BP	B-10266-1
152733	83	41/64"	F, AS, BJ	B-10266-1
239758	84	3/4"	AM, BW	B-10266-1
239759	85	19/32"	BX	B-10266-1
160279	86	25/32"	B, H, J, BK, BS	B-10266-1
210975	87	53/64"	BH	B-10266-1
240752	88	55/64"	BB	B-10266-1
160471	89	59/64"	D, T, CQ	B-10266-1
168557	90	61/64"	G, P, BY, CY, DB	B-10266-1
175482	91	31/32"	K	B-10266-1

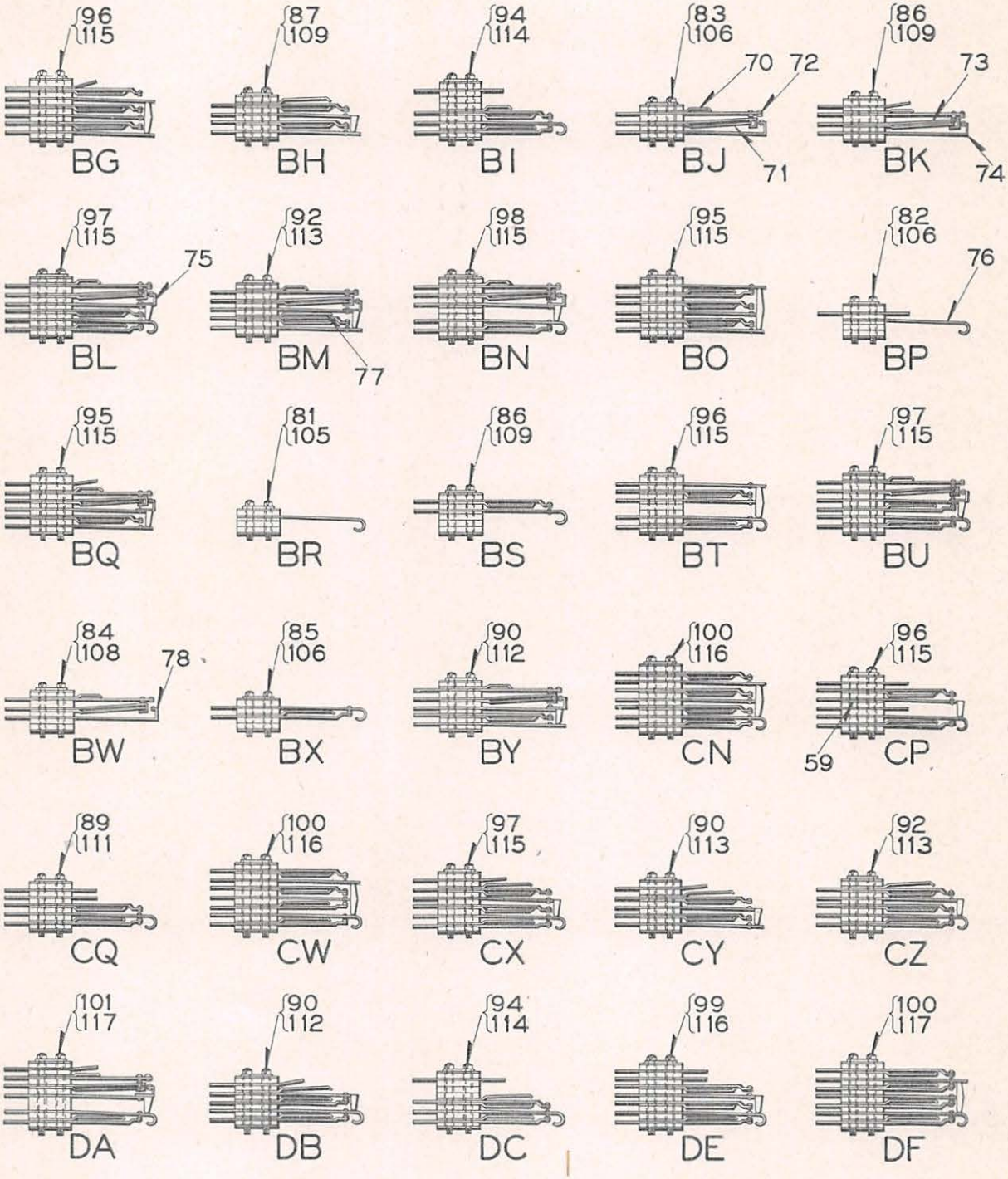

7-15-47

CONTACT SPRING STACKS FOR STYLE "L" RELAYS

UNION SWITCH & SIGNAL CO.

CONTACT SPRING STACKS AND DETAIL PARTS FOR STYLE "L-1", "L-2" AND "L-3" RELAYS

Order by Plate, Piece, Reference and Abbreviated Description Given in Heavy Face Type Only

CONTACT STACK COMPLETE			
PIECE	STACK REF.	CONTACT DESCRIPTION	DWG.REF.
168498	A	Coil Connector and 1 Front	B-12660-4
168499	B	Coil Connector and 1 Transfer	B-12660-4
175090	C	Coil Connector, 1 Front and 1 Transfer	B-12660-4
171122	D	Coil Connector and 2 Front	B-12660-4
190196	E	1 Front	B-12660-4
168500	F	1 Transfer	B-12660-4
168501	G	1 Front and 1 Transfer	B-12660-4
171123	H	2 Front	B-12660-4
168502	J	2 Back	B-12660-4
221076	K	1 Front and 1 Back	B-12660-4
185048	L	1 Back	B-12660-4
190197	M	Coil Connector	B-12660-4
190198	N	Coil Connector, 1 Transfer and 1 Back	B-12660-4
190199	P	1 Transfer and 1 Back	B-12660-4
190203	T	Coil Connector and 2 Back	B-12660-11
190204	U	Coil Connector, 1 Front and 1 Back	B-12660-11
190209	Z	Coil Connector and 1 Back	B-12660-11
190210	AA	1 Front	B-12660-11
190211	AB	3 Back	B-12660-21
190214	AG	Coil Connector and 2 Front	B-12660-21

UNION SWITCH & SIGNAL CO.

CONTACT STACK COMPLETE (cont'd.)			
PIECE	STACK REF.	CONTACT DESCRIPTION	DWG.REF.
190216	AJ	2 Transfer	B-12660-21
241461	AM	2 Coil Connectors and 1 Front	B-12660-34
232318	AN	Coil Connector and 3 Front	B-12660-34
241463	AP	Coil Connector, 2 Back and 1 Front	B-12660-34
241468	AR	Coil Connector and 2 Transfer	B-12660-34
241462	AS	Special Coil Connector and 1 Transfer	B-12660-34
241469	AT	Coil Connector and 3 Back	B-12660-37
241470	AW	Coil Connector, 1 Back and 2 Front	B-12660-37
241471	AX	Special Coil Connector, 2 Front and 1 Transfer	B-12660-37
241472	AY	2 Back and 1 Front	B-12660-37
232319	AZ	Special Coil Connector, 2 Front and 1 Back	B-12660-37
190218	BA	Coil Connector and 1 Transfer	B-12660-23
190219	BB	Coil Connector and 1 Back	B-12660-23
190220	BC	Special Coil Connector and 2 Transfer	B-12660-23
190221	BD	3 Front	B-12660-23
190224	BG	Special Coil Connector and 3 Front	B-12660-23
190225	BH	2 Front	B-12660-23
190226	BI	Coil Connector and 1 Transfer	B-12660-23
190227	BJ	1 Continuity	B-12660-24
190228	BK	Coil Connector and 1 Continuity	B-12660-24
184202	BL	1 Continuity and 1 Transfer	B-12660-24
190229	BM	1 Continuity and 1 Front	B-12660-24
241444	BN	1 Continuity and 1 Back	B-12660-24
102337	BO	1 Back and 2 Front	B-12660-23
190230	BP	Coil Connector and Special Spring	B-12660-24
190231	BQ	Coil Connector, 1 Continuity and 1 Front	B-12660-24
190232	BR	Special Spring	B-12660-24

UNION SWITCH & SIGNAL CO.

CONTACT STACK COMPLETE (cont'd.)			
PIECE	STACK REF.	CONTACT DESCRIPTION	DWG.REF.
241445	BS	1 Front	B-12660-24
241446	BT	1 Front and 1 Back	B-12660-24
241447	BU	1 Continuity with dependent Back and 1 Back	B-12660-24
219400	BW	1 Continuity	B-12660-27
241453	BX	1 Back	B-12660-27
241454	BY	1 Continuity and 1 Front	B-12660-27
241473	CN	2 Front and 1 Transfer	B-12660-37
241476	CP	2 Coil Connectors, 1 Front and 1 Back	B-12660-39
241477	CQ	2 Coil Connectors and 1 Transfer	B-12660-39
240111	CW	1 Front, 1 Transfer and 1 Back	B-12660-42
240404	CX	Coil Connector, 1 Front and 1 Transfer	B-12660-42
240405	CY	Coil Connector and 2 Front	B-12660-42
240406	CZ	1 Front and 1 Transfer	B-12660-42
240407	DA	Coil Connector, 1 Continuity and 1 Back	B-12660-42
240408	DB	Coil Connector and 2 Back	B-12660-42
240409	DC	Coil Connector and 1 Transfer	B-12660-42
245807	DE	2 Coil Connectors, 1 Front and 1 Transfer	B-12660-42
245838	DF	1 Transfer and 2 Back	B-12660-42
PIECE	REF.	DESCRIPTION	DWG.REF.
239921	55	INSULATION (1/64" thick)	8750-1460
174235	56	INSULATION (1/8" thick)	8750-2503
152718	57	INSULATION (1/16" thick)	8750-3044
152720	58	SPACER (Steel)	7828-275
210992	59	SPACER (Brass, 1/32" thick)	7828-275
162351	60	REINFORCING SPRING	8735-697
152721	61	COIL CONNECTOR	8064-663
152726	62	CONTACT STOP, also used as Buffer Stop when necessary	8385-2166
152725	63	CONTACT SPRING COMPLETE, Front or Back	8385-2166
173103	64	CONTACT SPRING COMPLETE, Flat Heel	8385-2290

UNION SWITCH & SIGNAL CO.

PIECE	REF.	DESCRIPTION	DWG. REF.
152728	65	CONTACT SPRING COMPLETE, Curved Heel	8385-2167
245099	66	CONTACT SPRING COMPLETE, Heel with insulated short tip, molded type	8385-2790
245101	67	CONTACT SPRING COMPLETE, Heel with insulated regular T-tip, molded type	8385-2790
245100	68	CONTACT SPRING COMPLETE, Heel with insulated long tip, molded type	8385-2790
245102	69	CONTACT SPRING COMPLETE, Heel with insulated offset T-tip, molded type	8385-2790
182145	70	CONTINUITY CONTACT STOP, upper	8385-2344
182146	71	CONTINUITY CONTACT STOP, lower	8385-2345
182148	72	CONTINUITY CONTACT SPRING COMPLETE, flat upper spring	8385-2346
182150	73	CONTINUITY CONTACT SPRING COMPLETE, middle spring	8385-2347
217173	74	CONTINUITY CONTACT SPRING COMPLETE, lower spring	8385-2348
245104	75	CONTINUITY CONTACT SPRING COMPLETE, lower spring, molded tip.	8385-2790
183240	76	CONTACT SPRING	8385-2354
246749	77	STOP SPRING	8385-2345
182207	78	CONTACT SPRING COMPLETE	8385-2348
	79	EXTRUDED PLASTIC BUSHING MATERIAL, in 3-foot lengths (CN774008) (Not shown)	

EXTRUDED PLASTIC BUSHING

PIECE	REF.	LENGTH	FOR CONTACT STACKS	DWG.REF.
152731	80	19/64"	M	B-10266-1
152732	81	15/32"	E, L, AA, BR	B-10266-1
161846	82	39/64"	A, Z, BP	B-10266-1
152733	83	41/64"	F, AS, BJ	B-10266-1
239758	84	3/4"	AM, BW	B-10266-1
239759	85	19/32"	BX	B-10266-1
160279	86	25/32"	B, H, J, BK, BS	B-10266-1
210975	87	53/64"	BH	B-10266-1
240752	88	55/64"	BB	B-10266-1
160471	89	59/64"	D, T, CQ	B-10266-1
168557	90	61/64"	G, P, BY, CY, DB	B-10266-1
175482	91	31/32"	K	B-10266-1

UNION SWITCH & SIGNAL CO.

EXTRUDED PLASTIC BUSHING (cont'd.)				
PIECE	REF.	LENGTH	FOR CONTACT STACKS	DWG.REF.
152735	92	63/64"	AG, BM, CZ	B-10266-1
169144	93	1-3/64"	BA	B-10266-1
239757	94	1-1/16"	BI, DC	B-10266-1
160299	95	1-3/32"	C, N, AB, AY, BD, BO, BQ	B-10266-1
152736	96	1-7/64"	U, BG, BT, CP	B-10266-1
239756	97	1-1/8"	AJ, BL, BU, CX	B-10266-1
161280	98	1-9/64"	BC, BN	B-10266-1
239875	99	1-15/64"	AN, AP, AT, AW, DE	B-10266-1
173926	100	1-17/64"	AR, CN, CW, DF	B-10266-1
245048	101	1-9/32"	DA	B-10266-1
230838	102	1-19/64"	AX, AZ	B-10266-1

MACHINE SCREW, NO.3-56 x _____ Fil.Hd.S. (Tin Pl.)			
PIECE	REF.	LENGTH	FOR CONTACT STACKS
	103	1/2"	M
	104	5/8"	AA
	105	11/16"	E, L, BR
	106	13/16"	A, F, Z, BJ, BP, BX
	107	7/8"	AS
	108	15/16"	AM, BW
	109	1"	B, H, J, BH, BK, BS
	110	1-1/16"	BB
	111	1-1/8"	D, T, CQ
	112	1-5/32"	G, P, BY, DB
	113	1-3/16"	K, AG, BM, CY, CZ
	114	1-1/4"	BA, BI, DC
	115	1-5/16"	C, N, U, AB, AJ, AY, BC, BD, BG, BL, BN, BO, BQ, BT, BU, CP, CX
	116	1-7/16"	AN, AP, AR, AT, AW, CN, CW, DE
	117	1-1/2"	AX, AZ, DA, DF

PLATE T-320

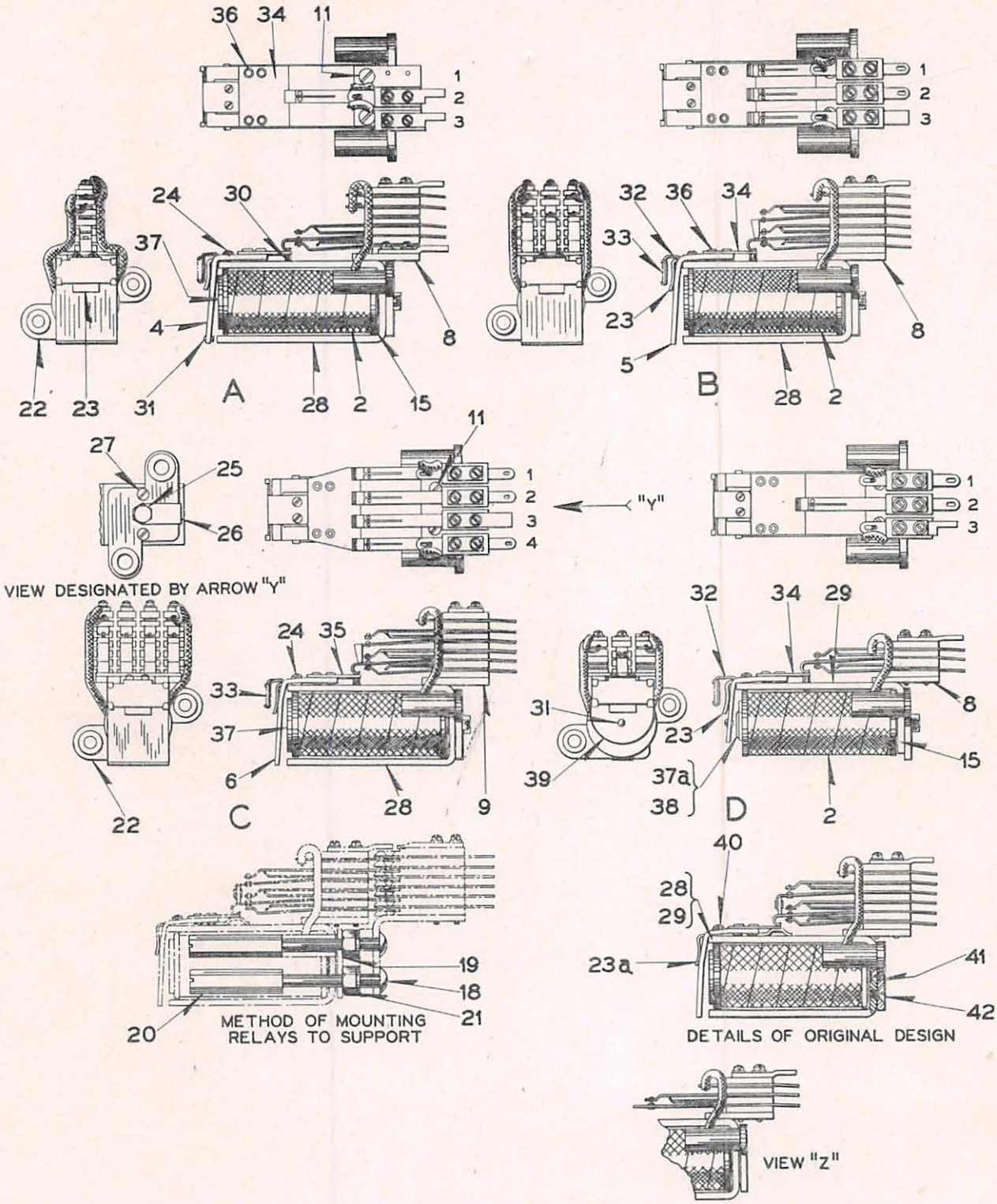

7-15-47

STYLE "LP-53" RELAYS

UNION SWITCH & SIGNAL CO.

STYLE "LP-53" RELAYS

When ordering replacement relays, give relay nomenclature and the installation for which required; also when possible give the piece number stamped on upper face of the backstrap.

When ordering relays not for replacement state contact and battery requirements. Also state nomenclature required for stamping on nomenclature tag. In stating contact requirements specify in terms of assemblies shown on Plate T-330. When adding stacks to Relays, the maximum relay calibration should not be exceeded.

Order by Plate, Piece, Reference and Abbreviated Description Given in Heavy Face Type Only

PIECE	REF.	DESCRIPTION	DWG. REF.
	A	1-WAY STYLE "LP-53" RELAY (slow acting)	B-12765-
	B	3-WAY STYLE "LP-53" RELAY (6 springs per stack as shown) (slow acting)	B-12765-
	Ba	3-WAY STYLE "LP-53" RELAY (3 springs per stack per View "Z")(slow acting)	B-12765-
	C	4-WAY STYLE "LP-53" RELAY (slow acting)	B-12765-
	D	3-WAY STYLE "LP-53" RELAY (3 springs per stack as shown)	B-12765-
152762	2	COIL, 280-Ohms	8133-382
152761	2a	COIL, 72-Ohms	8133-382
163282	2b	COIL, 750-Ohms	8133-382
174998	2c	COIL, 20-Ohms	8133-382
163001	2d	COIL, 175-Ohms	8133-382
161796	2e	COIL, 425-Ohms	8133-382
166135	4	2-WAY SQUARE ARMATURE COMPLETE, with Insulation, Rivets and Stop Pin (unfiled)	8157-381
156361	5	3-WAY SQUARE ARMATURE COMPLETE, with Insulation and Rivets	8157-363
161642	6	4-WAY SQUARE ARMATURE COMPLETE, with Insulation and Rivets	8157-363
152751	8	3-WAY BASE PLATE	11893-434
152752	9	4-WAY BASE PLATE	11893-434
	11	MACHINE SCREW, NO.6-40 x 1/4" Flat Hd.S. (N.P.) for attaching Base Plate to Backstrap	
175630	15	SPRING WASHER	7828-374
210918	18	SCREW	8098-982
210747	19	NUT	8109-324
104254	20	NUT	8109-496
29102	21	WASHER	7828-139

UNION SWITCH & SIGNAL CO.

PIECE	REF.	DESCRIPTION	DWG. REF.
104252	22	GUIDE PLATE COMPLETE	11893-856
152756	23	ARMATURE STOP	11893-432
246229	23a	ARMATURE STOP, PIN AND SCREWS (Inc. 1-23, 1-30 and 2-24) For changing Relays built with one piece stop to have a two piece stop	11893-432
	24	MACHINE SCREW, NO.6-40 x 3/16" Fil.Hd.S. (Tin Pl.)	
186081	25	BOLT	8098-1086
243847	26	BOLT LOCK	8486-428
	27	MACHINE SCREW, NO.6-40 x 1/4" Fil.Hd.S. (Tin Pl.)	
248638	*28	BACKSTRAP with Pin Ref.30. For "LP-53" Square Armature Relays	8162-228
248639	*29	BACKSTRAP with Pin Ref.30. For "LP-53" Round Armature Relays	8162-226
		* If for replacement on Relay with original one piece Armature Stop, Pin Ref.30 must be removed. May be used with original Guide Plate having mounting holes on vertical centerline by countersinking hole for core screw.	
248600	30	PIN	8097-957
107998	31	STOP PIN for Armatures	8097-720
245081	32	TAG HOLDER	11893-1032
245800	33	TAG, BLANK (If marked tags are desired, specify markings)	8988-193
152737	34	3-WAY ARMATURE INSULATION, 3/32" thick	8750-2321
152738	35	4-WAY ARMATURE INSULATION, 3/32" thick	8750-2321
241993	36	TUBULAR RIVET, for attaching armature insulation to armature	12579-7
169124	37	CORE, 1" diameter pole face	8101-346
161589	37a	CORE, 1/2" diameter pole face	8101-304
257916	37b	CORE AND COIL RETAINER COMPLETE (Inc.1-37a and 1-38)	8101-304
248405	38	COIL RETAINER	8124-279
185954	39	3-WAY ROUND ARMATURE COMPLETE with Insulation, Rivets and Stop Pin (unfiled)	8157-355
	40	MACHINE SCREW, NO.6-40 x 5/32" Fil.Hd.S. (Tin Pl.) for attaching original one piece Armature Stop to Backstrap.	
	41	MACHINE SCREW, NO.10-30 x 5/8" Flat Hd.S. (Tin Pl.) for attaching Backstrap having countersunk hole for core screw to core.	
	42	MACHINE SCREW, NO.10-30 x 1/4" Flat Hd.S. (Tin Pl.) for attaching Guide Plate to Backstrap.	

PLATE T-322

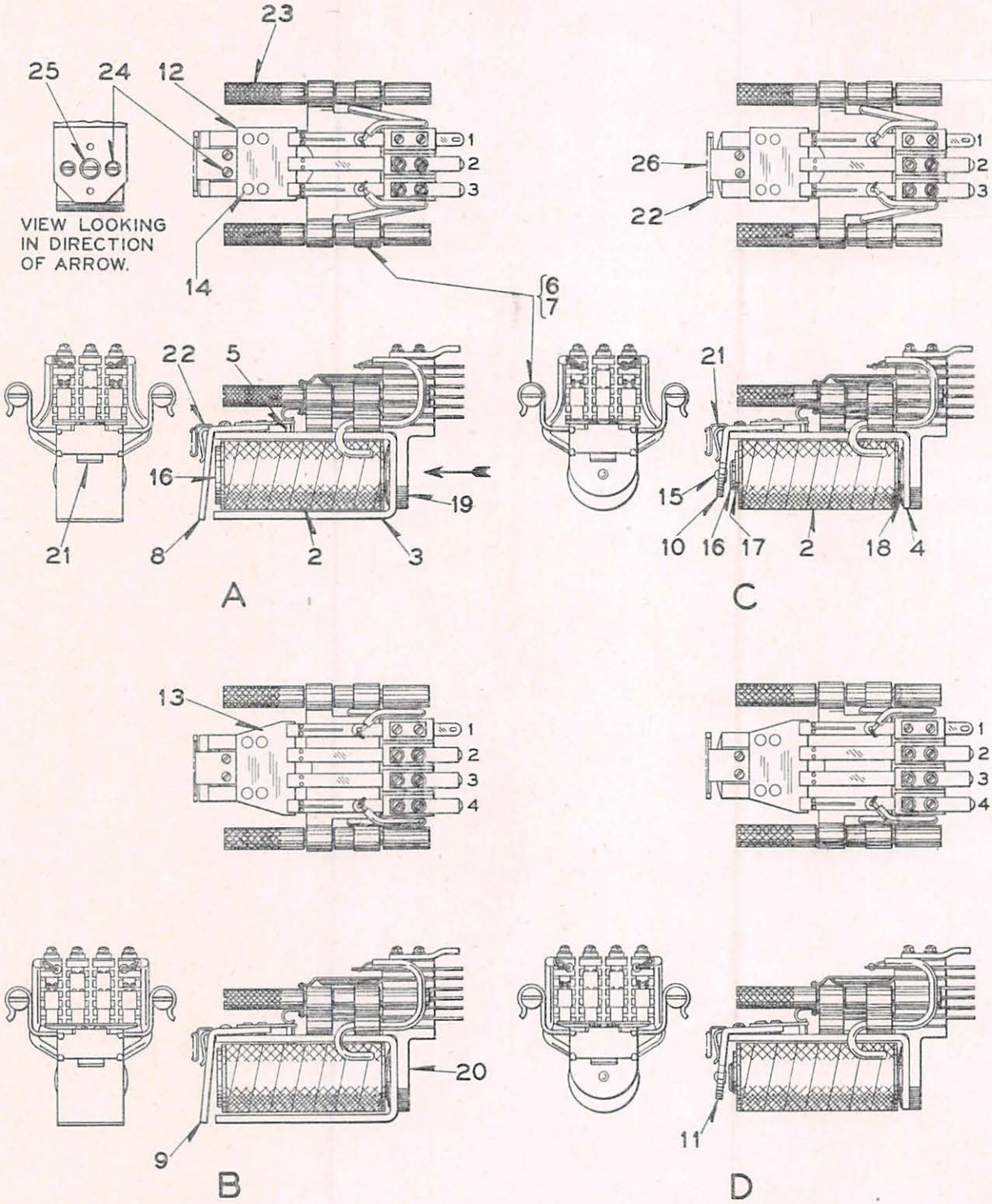

7-15-47

STYLE "LP-58" RELAYS

UNION SWITCH & SIGNAL CO.

STYLE "LP-58" RELAYS

When ordering replacement relays, give relay nomenclature and the installation for which required; also when possible give the piece number stamped on bottom of relay support.

When ordering relays not for replacement state contact and battery requirements. Also state nomenclature required for stamping on nomenclature tag. In stating contact requirements, specify in terms of assemblies shown on Plate T-331. When adding stacks to Relays, the maximum relay calibration should not be exceeded.

Order by Plate, Piece, Reference and Abbreviated Description Given in Heavy Face Type Only

PIECE	REF.	DESCRIPTION	DWG. REF.
	A	3-WAY STYLE "LP-58" SLOW RELEASE RELAY. (6 springs per stack)..	B-12842-
	Aa	3-WAY STYLE "LP-58" SLOW RELEASE RELAY. (3 springs per stack)..	B-12842-
	B	4-WAY STYLE "LP-58" SLOW RELEASE RELAY. (6 springs per stack)..	B-12842-
	C	3-WAY STYLE "LP-58" RELAY (6 springs per stack).....	B-12842-
	Ca	3-WAY STYLE "LP-58" RELAY (3 springs per stack).....	B-12842-
	D	4-WAY STYLE "LP-58" RELAY (6 springs per stack).....	B-12842-
	Da	4-WAY STYLE "LP-58" RELAY (3 springs per stack).....	B-12842-
174998	2	COIL, 20-Ohms.....	8133-382
156057	2a	COIL, 31-Ohms.....	8133-382
156056	2b	COIL, 48-Ohms.....	8133-382
152761	2c	COIL, 72-Ohms.....	8133-382
163000	2d	COIL, 112-Ohms.....	8133-382
163001	2e	COIL, 175-Ohms.....	8133-382
152762	2f	COIL, 280-Ohms.....	8133-382
228798	2g	COIL, 58 and 200-Ohms (Double winding).....	8133-525
245068	3	BACKSTRAP with Pin Ref.5, Relay Support Ref.6 and four Rivets Ref.7. For "LP-58" Slow Release Relays.....	8162-284
245069	4	BACKSTRAP with Pin Ref.5, Relay Support Ref.6 and four Rivets Ref.7. For "LP-58" Relays having Round Armatures.....	8162-284
248600	5	ARMATURE STOP PIN.....	8097-957
245065	6	RELAY SUPPORT.....	11893-1030
246349	7	RIVET for attaching Relay Support to Backstrap.....	10935-54
156361	8	3-WAY SQUARE ARMATURE COMPLETE with Insulation and Rivets.....	8157-363
161642	9	4-WAY SQUARE ARMATURE COMPLETE with Insulation and Rivets.....	8157-363
185954	10	3-WAY ROUND ARMATURE COMPLETE with Insulation, Rivets and Stop Pin (Unfiled).....	8157-355

UNION SWITCH & SIGNAL CO.

PIECE	REF.	DESCRIPTION	DWG. REF.
185956	11	4-WAY ROUND ARMATURE COMPLETE with Insulation, Rivets and Stop Pin (Unfiled)	8157-355
152737	12	3-WAY ARMATURE INSULATION, 3/32" thick	8750-232
152738	13	4-WAY ARMATURE INSULATION, 3/32" thick	8750-2321
241993	14	TUBULAR RIVET, for attaching armature insulation to armature	12579-7
107998	15	STOP PIN for Round Armatures	8097-720
161589	16	CORE, 1/2" diameter pole face	8101-304
257916	16a	CORE AND COIL RETAINER COMPLETE (Inc.1-16 and 1-17)	8101-304
183234	16b	CORE, undercut, 1/2" diameter pole face	8101-359
257917	16c	CORE AND COIL RETAINER COMPLETE (Inc.1-16b and 1-17)	8101-359
169124	16d	CORE, 1" diameter pole face	8101-346
209194	16e	CORE, undercut, 1" diameter pole face	8101-346
248405	17	COIL RETAINER	8124-279
175630	18	WASHER, Steel Spring	7828-374
245073	19	3-WAY T-SECTION STACK PLATE	10914-1644
245074	20	4-WAY T-SECTION STACK PLATE	10914-1644
152756	21	ARMATURE STOP	11893-432
245081	22	TAG HOLDER	11893-1032
245077	23	NUT	8109-506
	24	MACHINE SCREW, NO.6-40 x 3/16" Fil.Hd.S. (Tin Pl.)	
	25	MACHINE SCREW, NO.10-30 x 1/2" Fil.Hd.S. (Tin Pl.)	
245800	26	TAG, Blank (If marked tags are desired, specify markings)	8988-193

PLATE T-327

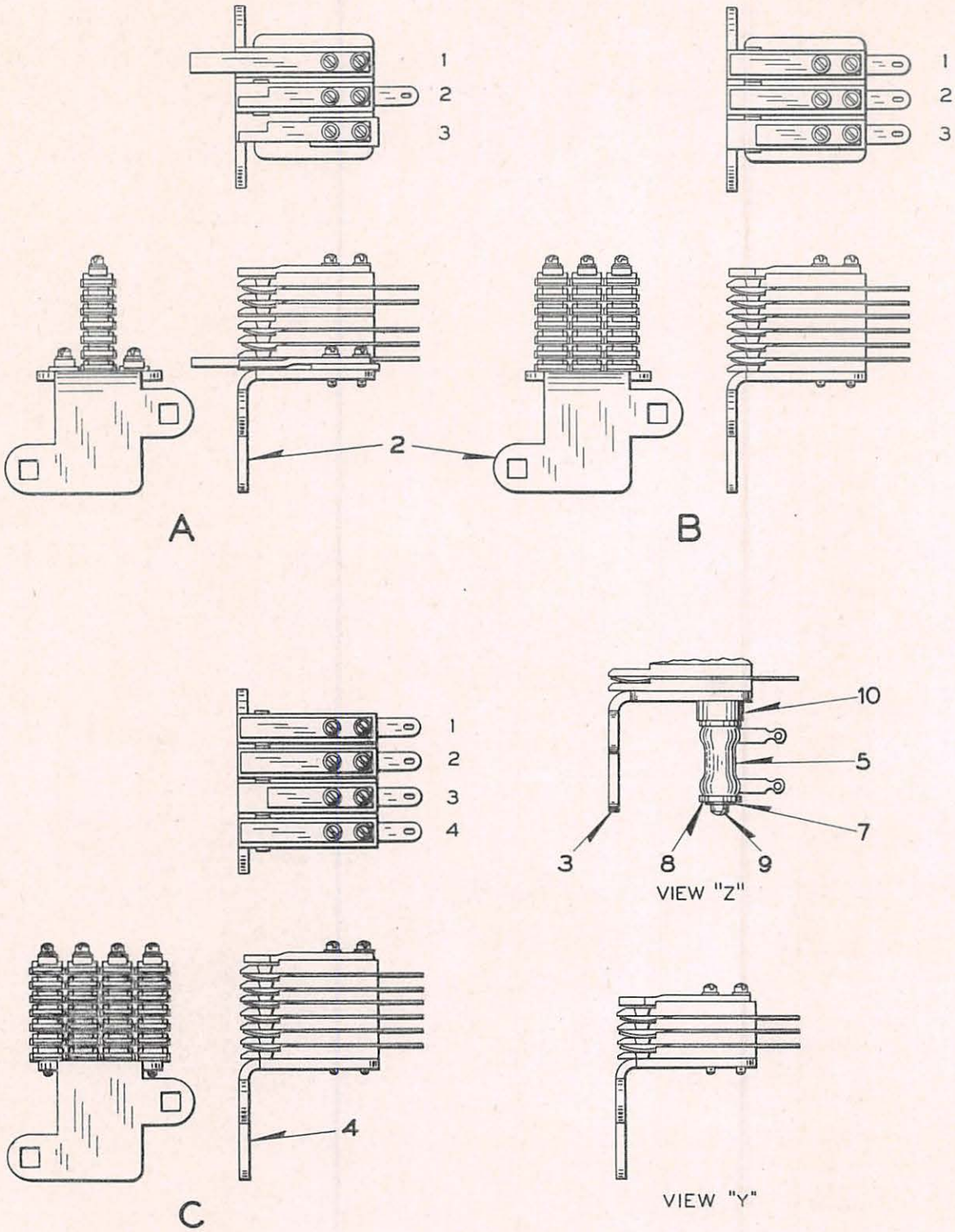

MOUNTING BASES FOR "LP-53" RELAYS

7-15-47
1-18-43

UNION SWITCH & SIGNAL CO.

MOUNTING BASES FOR "LP-53" RELAYS

When ordering replacement mounting bases, give relay nomenclature with which used and the installation for which required.

When ordering mounting bases not for replacement state contact sections desired by specifying in terms of assemblies shown on Plate T-337.

Order by Plate, Piece, Reference and Abbreviated Description Given in Heavy Face Type Only

PIECE	REF.	DESCRIPTION	DWG. REF.
	A	MOUNTING BASE for 1-Way Relay	B-12765-
	B	MOUNTING BASE as shown for 3-Way Relay having six springs per stack	B-12765-
	Ba	MOUNTING BASE with Resistor per View "Z" for 3-Way Relay having six springs per stack	B-12765-
	Bb	MOUNTING BASE per View "Y" for 3-Way Relay having three springs per stack	B-12765-
	C	MOUNTING BASE for 4-Way Relay	B-12765-
104248	2	BRACKET for Refs.A, B and Bb	10914-946
219340	3	BRACKET for Ref.Ba	10914-946
104249	4	BRACKET for Ref.C	10914-946
	5	RESISTOR (Orders should specify nomenclature of Relay with which Resistor is used and installation).	
52946	7	WASHER	7828-184
217250	8	RUBBER WASHER	8078-253
	9	MACHINE SCREW, NO.6-40 x 1-3/16" Fil.Hd.Br. (N.P.) with one Washer Ref.7 and two Washers Ref.8 for attaching Resistor to Mounting Block as shown	
	9a	MACHINE SCREW, NO.6-40 x 1-3/8" Fil.Hd.Br. (N.P.) with one Washer Ref.7 and two Washers Ref.8. Used for attaching Resistors to vertical section of original design of Bracket (Not shown)	
219020	*10	MOUNTING BLOCK	12538-237

* Screws for attaching Mounting Block to Bracket must be 1/8" longer than specified on Plate T-337.

7-15-47

PLATE T-330

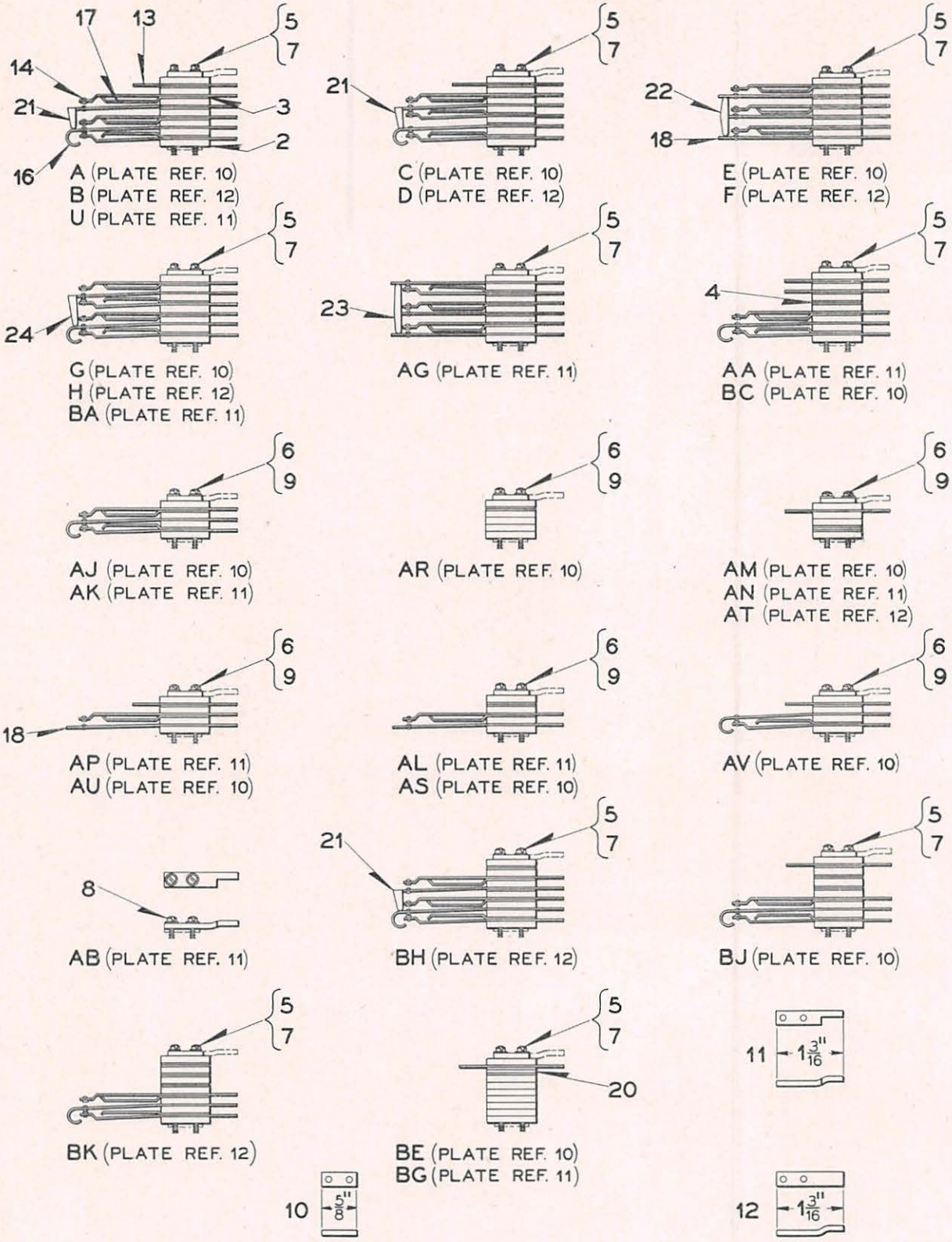

7-15-47

CONTACT SECTIONS FOR STYLE "LP-53" RELAYS

UNION SWITCH & SIGNAL CO.

CONTACT SECTIONS FOR STYLE "LP-53" RELAYS

Order by Plate, Piece, Reference and Abbreviated Description Given in Heavy Face Type Only

CONTACT STACK COMPLETE				
PIECE	STACK REF.	CONTACT DESCRIPTION	DIFFERENTI-ATING PLATE	DWG.REF.
227268	A	Coil Connector, 1 Front and 1 Transfer	Std.	B-12766-1
227269	B	Coil Connector, 1 Front and 1 Transfer	Long	B-12766-1
242407	C	Coil Connector, 1 Back and 1 Transfer	Std.	B-12766-1
227270	D	Coil Connector, 1 Back and 1 Transfer	Long	B-12766-1
242408	E	3 Front	Std.	B-12766-1
242409	F	3 Front	Long	B-12766-1
227271	G	2 Transfer	Std.	B-12766-1
242410	H	2 Transfer	Long	B-12766-1
242406	U	Coil Connector, 1 Front and 1 Transfer	Long-notched	B-12766-1
242390	AA	2 Coil Connectors and 1 Transfer	Long-notched	B-12766-3
242392	AB		Long-notched	B-12766-3
227278	AG	2 Fronts and 1 Back	Long-notched	B-12766-5
242362	AJ	1 Transfer	Std.	B-12766-6
242363	AK	1 Transfer	Long-notched	B-12766-6
242364	AL	1 Front	Long-notched	B-12766-6
242366	AM	Coil Connector	Std.	B-12766-6
242367	AN	Coil Connector	Long-notched	B-12766-6
242369	AP	Coil Connector and 1 Front	Long-notched	B-12766-6
242372	AR		Std.	B-12766-6
242365	AS	1 Front	Std.	B-12766-6
242368	AT	Coil Connector	Long	B-12766-6
242370	AU	Coil Connector and 1 Front	Std.	B-12766-6
242646	AV	Coil Connector and 1 Back	Std.	B-12766-9

UNION SWITCH & SIGNAL CO.

CONTACT STACK COMPLETE				
PIECE	STACK REF.	CONTACT DESCRIPTION	DIFFERENTI-ATING PLATE	DWG.REF.
242411	BA	2 Transfer	Long-notched	B-12766-1
242391	BC	2 Coil Connectors and 1 Transfer	Std.	B-12766-3
242393	BE	Coil Connector	Std.	B-12766-3
242395	BG	Coil Connector	Long-notched	B-12766-3
242352	BH	1 Front and 1 Transfer	Long	B-12766-8
243687	BJ	Coil Connector and 1 Transfer	Std.	B-12766-8
243688	BK	1 Transfer	Long	B-12766-8

PIECE	REF.	DESCRIPTION	DWG.REF.
174235	2	INSULATION (1/8" thick)	8750-2503
210992	3	SPACER (Brass, 1/32" thick)	7828-275
216165	4	SPACER (Brass, 1/64" thick)	7828-275
211156	5	INS.BUSHING, length 1-11/64"	B-10266-1
152733	6	INS.BUSHING, length 41/64"	B-10266-1
	7	MACHINE SCREW, NO.3-56 x 1-3/8" Fil.Hd.S. (N.P.) with No.3 S.Lock Washer (Int.Teeth) (Tin Pl.)	
	8	MACHINE SCREW, NO.3-56 x 1/4" Fil.Hd.S. (N.P.) with No.3 S.Lock Washer (Int.Teeth) (Tin Pl.)	
	9	MACHINE SCREW, NO.3-56 x 7/8" Fil.Hd.S. (N.P.) with No.3 S.Lock Washer (Int.Teeth) (Tin Pl.)	
104259	10	DIFFERENTIATING PLATE (Standard)	12538-200
104260	11	DIFFERENTIATING PLATE (Long)	12538-200
109916	12	DIFFERENTIATING PLATE (Long Notched)	12538-232
210990	13	COIL CONNECTOR	8064-663
210987	14	FRONT OR BACK CONTACT	8385-2166
210984	16	CONTACT SPRING COMPLETE, curved heel	8385-2167
152726	17	CONTACT SPRING STOP	8385-2166
210989	18	CONTACT SPRING COMPLETE, flat heel	8385-2290
152718	20	INSULATION (1/16" thick)	8750-3044
245095	21	CONTACT SPRING COMPLETE, heel with insulated short tip, molded type	8385-2790
245097	22	CONTACT SPRING COMPLETE, heel with insulated regular T-tip, molded type	8385-2790

UNION SWITCH & SIGNAL CO.

PIECE	REF.	DESCRIPTION	DWG. REF.
245098	23	CONTACT SPRING COMPLETE, heel with insulated offset T-tip, molded type.....	8385-2790
245096	24	CONTACT SPRING COMPLETE, heel with insulated long tip, molded type	8385-2790
	25	EXTRUDED PLASTIC BUSHING MATERIAL, in 3-foot lengths (C.N. 774008) (Not shown)	

7-15-47

PLATE T-331

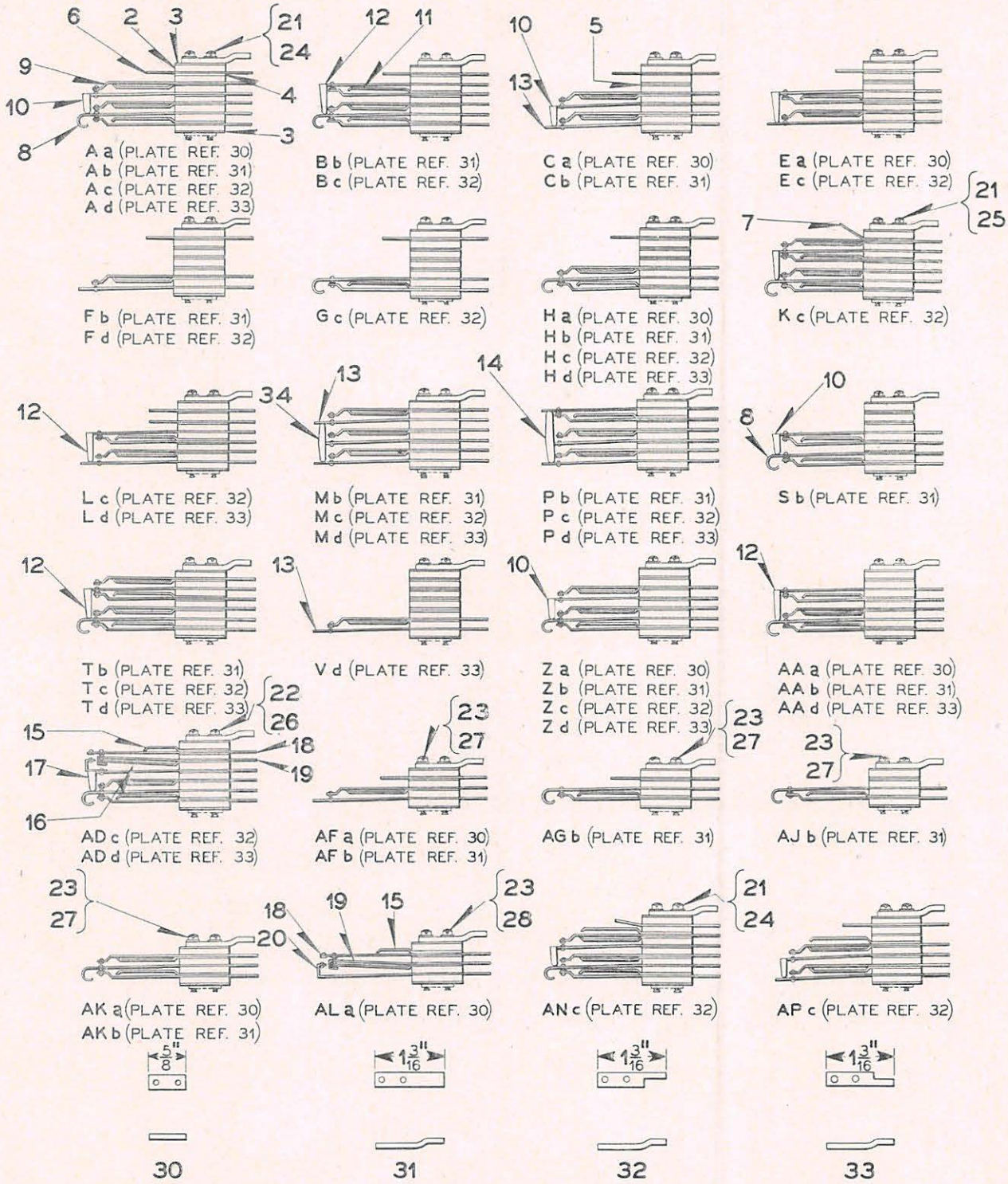

CONTACT SECTIONS FOR STYLE "LP-58" RELAYS

7-15-47

UNION SWITCH & SIGNAL CO.

CONTACT SECTIONS FOR STYLE "LP-58" RELAYS

Order by Plate, Piece, Reference and Abbreviated Description Given in Heavy Face Type Only

CONTACT STACK COMPLETE					
PIECE	STACK REF.	CONTACT DESCRIPTION	DIFFERENTIATING PLATE	REF.	DWG. REF.
246600	Aa	Coil Connector, 1 Front and 1 Transfer	Standard	30	B-12843-1
246601	Ab	Coil Connector, 1 Front and 1 Transfer	Long	31	B-12843-1
246602	Ac	Coil Connector, 1 Front and 1 Transfer	Long-notched	32	B-12843-1
246603	Ad	Coil Connector, 1 Front and 1 Transfer	Long-notched	33	B-12843-1
246605	Bb	Coil Connector, 1 Back and 1 Transfer	Long	31	B-12843-1
246606	Bc	Coil Connector, 1 Back and 1 Transfer	Long-notched	32	B-12843-1
246608	Ca	Coil Connector and 2 Fronts	Standard	30	B-12843-1
246609	Cb	Coil Connector and 2 Fronts	Long	31	B-12843-1
246616	Ea	Coil Connector, 1 Front and 1 Back	Standard	30	B-12843-1
246618	Ec	Coil Connector, 1 Front and 1 Back	Long-notched	32	B-12843-1
246621	Fb	Coil Connector and 1 Front	Long	31	B-12843-1
246623	Fd	Coil Connector and 1 Front	Long-notched	33	B-12843-1
246626	Gc	Coil Connector and 1 Back	Long-notched	32	B-12843-1
246628	Ha	Coil Connector and 1 Transfer	Standard	30	B-12843-2
246629	Hb	Coil Connector and 1 Transfer	Long	31	B-12843-2
246630	Hc	Coil Connector and 1 Transfer	Long-notched	32	B-12843-2
246631	Hd	Coil Connector and 1 Transfer	Long-notched	33	B-12843-2
246638	Kc	Coil Connector and 2 Transfers	Long-notched	32	B-12843-2
246642	Lc	2 Coil Connectors, 1 Front and 1 Back	Long-notched	32	B-12843-2
246643	Ld	2 Coil Connectors, 1 Front and 1 Back	Long-notched	33	B-12843-2
246645	Mb	3 Fronts	Long	31	B-12843-2
246646	Mc	3 Fronts	Long-notched	32	B-12843-2
246647	Md	3 Fronts	Long-notched	33	B-12843-2

UNION SWITCH & SIGNAL CO.

CONTACT STACK COMPLETE (cont'd.)					
PIECE	STACK REF.	CONTACT DESCRIPTION	DIFFERENTIATING PLATE	REF.	DWG.REF.
246653	Pb	1 Back and 2 Fronts	Long	31	B-12843-2
246654	Pc	1 Back and 2 Fronts	Long-notched	32	B-12843-2
246655	Pd	1 Back and 2 Fronts	Long-notched	33	B-12843-2
246665	Sb	2 Backs	Long	31	B-12843-3
246669	Tb	2 Transfers	Long	31	B-12843-3
246670	Tc	2 Transfers	Long-notched	32	B-12843-3
246671	Td	2 Transfers	Long-notched	33	B-12843-3
246675	Vd	1 Front	Long-notched	33	B-12843-3
246688	Za	1 Front and 1 Transfer	Standard	30	B-12843-4
246689	Zb	1 Front and 1 Transfer	Long	31	B-12843-4
246690	Zc	1 Front and 1 Transfer	Long-notched	32	B-12843-4
246691	Zd	1 Front and 1 Transfer	Long-notched	33	B-12843-4
246692	AAa	1 Back and 1 Transfer	Standard	30	B-12843-4
246693	AAb	1 Back and 1 Transfer	Long	31	B-12843-4
246695	AAd	1 Back and 1 Transfer	Long-notched	33	B-12843-4
246706	ADc	1 Continuity and 1 Transfer	Long-notched	32	B-12843-4
246707	ADd	1 Continuity and 1 Transfer	Long-notched	33	B-12843-4
246300	AFa	Coil Connector and 1 Front	Standard	30	B-12843-5
246301	AFb	Coil Connector and 1 Front	Long	31	B-12843-5
246305	AGb	Coil Connector and 1 Back	Long	31	B-12843-5
246313	AJb	1 Back	Long	31	B-12843-5
246316	AKa	1 Transfer	Standard	30	B-12843-5
246317	AKb	1 Transfer	Long	31	B-12843-5
246320	ALa	1 Continuity	Standard	30	B-12843-5
249916	ANc	Coil Connector, 1 Front and 1 Transfer	Long-notched	32	B-12843-6
249920	APc	Coil Connector and 2 Fronts	Long-notched	32	B-12843-6

PIECE	REF.	DESCRIPTION	DWG.REF.
174235	2	INSULATION (1/8" thick).....	8750-2503
239921	3	INSULATION (1/64" thick).....	8750-1460

UNION SWITCH & SIGNAL CO.

PIECE	REF.	DESCRIPTION	DWG. REF.
210992	4	SPACER (Brass, 1/32" thick)	7828-275
216165	5	SPACER (Brass, 1/64" thick)	7828-275
210990	6	COIL CONNECTOR	8064-663
167559	7	COIL CONNECTOR	8064-663
210984	8	CONTACT SPRING COMPLETE, Curved Heel	8385-2167
210987	9	CONTACT SPRING COMPLETE, Front or Back	8385-2166
245095	10	CONTACT SPRING COMPLETE, Heel with insulated short tip, molded type	8385-2790
152726	11	CONTACT STOP, also used as Buffer Stop where necessary	8385-2166
245096	12	CONTACT SPRING COMPLETE, Heel with insulated long tip, molded type	8385-2790
210989	13	CONTACT SPRING COMPLETE, Flat Heel	8385-2290
245098	14	CONTACT SPRING COMPLETE, Heel with insulated offset T-tip, molded type	8385-2790
182145	15	CONTINUITY CONTACT STOP, upper	8385-2344
182146	16	CONTINUITY CONTACT STOP, lower	8385-2345
245103	17	CONTINUITY CONTACT SPRING COMPLETE, lower spring, molded tip	8385-2790
246351	18	CONTINUITY CONTACT SPRING COMPLETE, flat upper spring	8385-2346
246353	19	CONTINUITY CONTACT SPRING COMPLETE, middle spring	8385-2347
246356	20	CONTINUITY CONTACT SPRING COMPLETE, lower spring	8385-2348
	21	MACHINE SCREW, NO.3-56 x 1-13/32" Fil.Hd.S. (N.P.) with No.3 S.Lock Washer (Int.Teeth) (Tin Pl.) for all stacks except those noted in Refs.22 and 23	
	22	MACHINE SCREW, NO.3-56 x 1-7/16" Fil.Hd.S. (N.P.) with No.3 S.Lock Washer (Int.Teeth) (Tin Pl.) for stacks ADc and ADd	
	23	MACHINE SCREW, NO.3-56 x 7/8" Fil.Hd.S. (N.P.) with No. 3 S. Lock Washer (Int.Teeth) (Tin Pl.) for stacks AFa, AFb, AGb, AJb, AKa, AKb and ALa.	
237174	24	EXTRUDED PLASTIC BUSHING, length 1-5/32", for all stacks except those noted in Refs.25, 26, 27 and 28	B-10266-1
211156	25	EXTRUDED PLASTIC BUSHING, length 1-11/64", for stack KC	B-10266-1
183766	26	EXTRUDED PLASTIC BUSHING, length 1-3/16", for stacks ADc and ADd	B-10266-1
152733	27	EXTRUDED PLASTIC BUSHING, length 41/64", for stacks AFa, AFb, AGb, AJb, AKa and AKb	B-10266-1
246358	28	EXTRUDED PLASTIC BUSHING, length 21/32", for stack ALa	B-10266-1
	29	EXTRUDED PLASTIC BUSHING MATERIAL, in 3-foot lengths (CN774008) (Not shown)	

UNION SWITCH & SIGNAL CO.

PIECE	REF.	DESCRIPTION	DWG. REF.
104259	30	DIFFERENTIATING PLATE, Standard	12538-200
104260	31	DIFFERENTIATING PLATE, Long	12538-200
109916	32	DIFFERENTIATING PLATE, Long-notched	12538-232
245078	33	DIFFERENTIATING PLATE, Long-notched	12538-232
245097	34	CONTACT SPRING COMPLETE, Heel with insulated regular T-tip, molded type	8385-2790

7-15-47

PLATE T-337

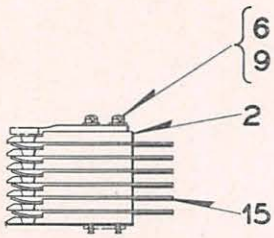

WA (STD. DIFF. PLATE)
WB (SHORT DIFF. PLATE)
WL (NOTCHED DIFF. PLATE)

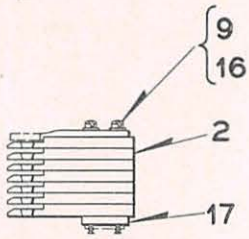

WC (STD. DIFF. PLATE)

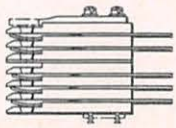

WN (NOTCHED DIFF. PLATE)
WAH (STD. DIFF. PLATE)

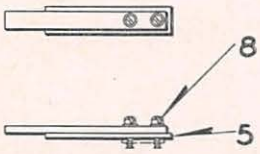

WP (LONG DIFF. PLATE)

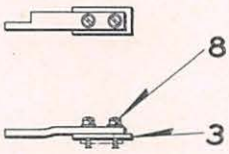

WQ (NOTCHED DIFF. PLATE)

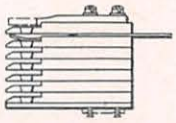

WAJ (STD. DIFF. PLATE)
WAL (NOTCHED DIFF. PLATE)

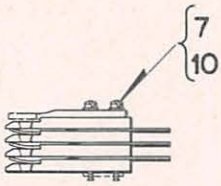

WT (STD. DIFF. PLATE)
WU (LONG NOTCHED DIFF. PLATE)

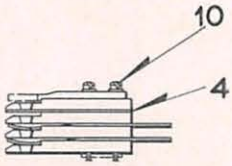

WAA (LONG NOTCHED DIFF. PLATE)
WAB (STD. DIFF. PLATE)

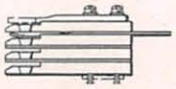

WAC (STD. DIFF. PLATE)
WAD (LONG NOTCHED DIFF. PLATE)
WAE (SHORT DIFF. PLATE)

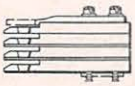

WAG (STD. DIFF. PLATE)

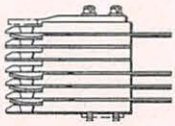

WAM (STD. DIFF. PLATE)

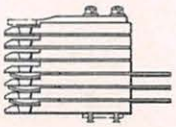

WAN (SHORT DIFF. PLATE)

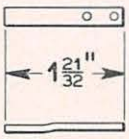

11

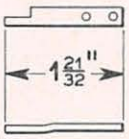

12

13

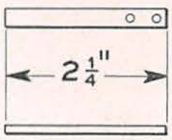

14

7-15-47

STACKS FOR MOUNTING BASES FOR "LP-53" RELAYS

UNION SWITCH & SIGNAL CO.

STACKS FOR STYLE "LP-53" RELAY MOUNTING BASES

Order by Plate, Piece, Reference and Abbreviated Description Given in Heavy Face Type Only

PIECE	REF.	DESCRIPTION	DWG. REF.
104250	2	INSULATION	8750-2884
152718	3	INSULATION (1/16" thick)	8750-3044
108859	4	SPACER (1/64" thick)	8750-2956
108860	5	SPACER (1/16" thick)	8750-2956
211057	6	INS.BUSHING, length 1-1/4"	B-10266-1
199631	7	INS.BUSHING, length 47/64"	B-10266-1
	8	MACHINE SCREW, NO.3-56 x 5/16" Fil.Hd.S. (N.P.) with No.3 S.Lock Washer (Int.Teeth) (Tin Pl.)	
	9	MACHINE SCREW, NO.3-56 x 1-1/2" Fil.Hd.S. (N.P.) with No.3 S.Lock Washer (Int.Teeth) (Tin Pl.)	
	10	MACHINE SCREW, NO.3-56 x 15/16" Fil.Hd.S. (N.P.) with No.3 S.Lock Washer (Int.Teeth) (Tin Pl.)	
104257	11	DIFFERENTIATING PLATE (Standard)	12538-201
109917	12	DIFFERENTIATING PLATE (Notched)	12538-232
104258	13	DIFFERENTIATING PLATE (Short)	12538-201
217718	14	DIFFERENTIATING PLATE (Long)	12538-233
104256	15	CONTACT SPRING	8385-2585
183766	16	INS.BUSHING, length 1-3/16"	B-10266-1
104259	17	PLATE	12538-200
	18	EXTRUDED PLASTIC BUSHING MATERIAL, in 3-foot lengths (C.N.774008) (Not shown)	

PLATE T-345

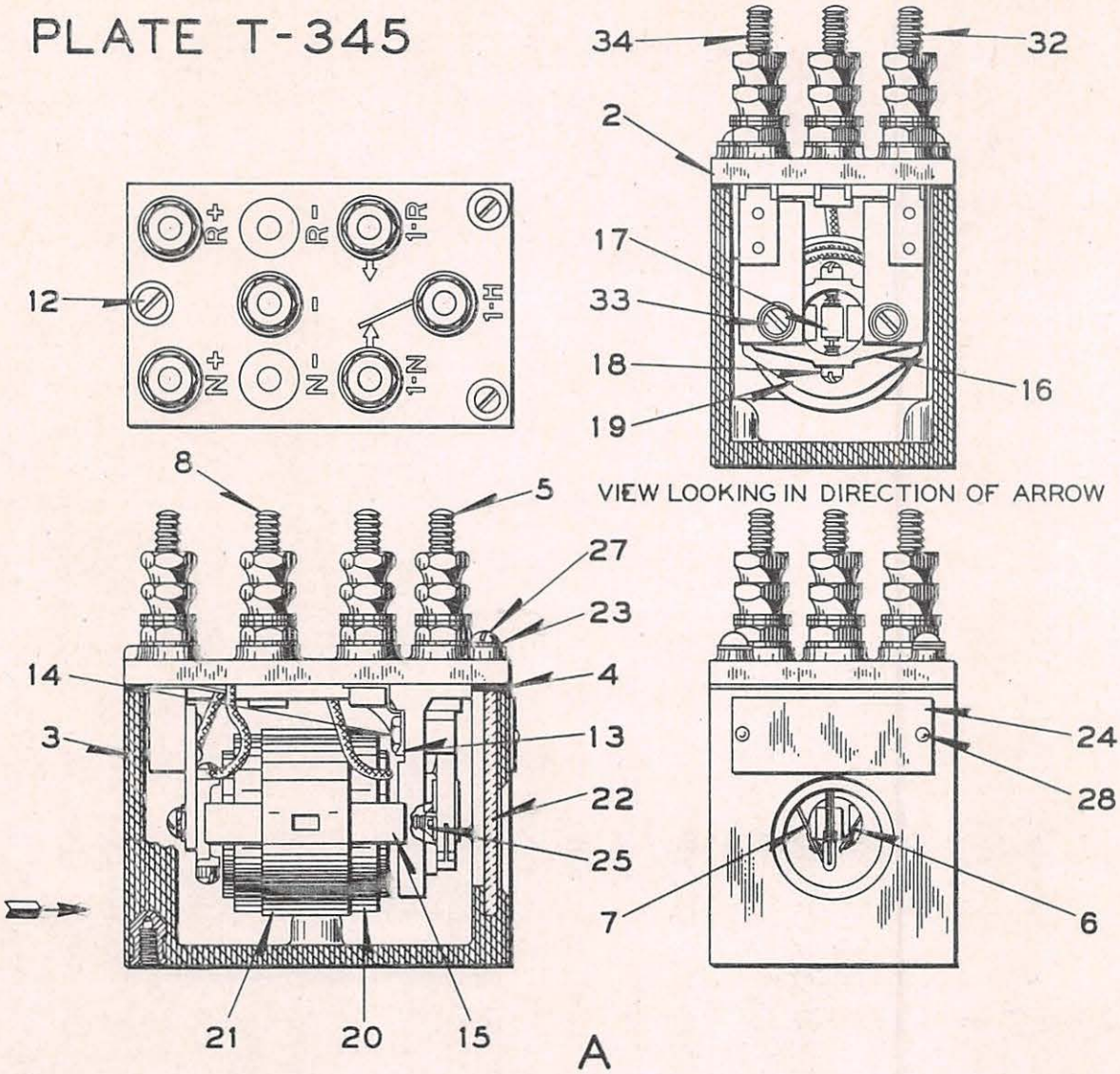

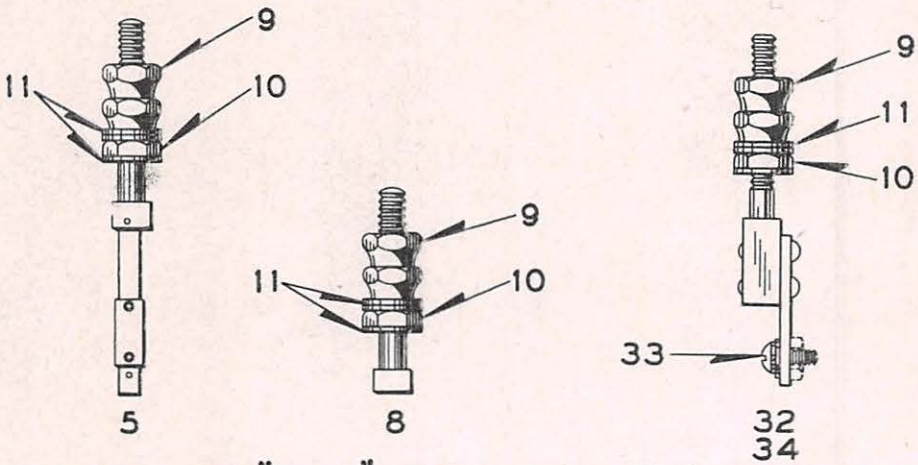

7-15-47
1-18-43 STYLE "P-3" POLAR RELAY

UNION SWITCH & SIGNAL CO.

STYLE "P-3" POLAR RELAY

ORDER BY PLATE, PIECE, REFERENCE AND ABBREVIATED DESCRIPTION
GIVEN IN HEAVY FACE TYPE STATING INSTALLATION FOR WHICH REQUIRED.

PIECE	REF.	DESCRIPTION	DWG. REF.
	A	STYLE "P-3" POLAR RELAY COMPLETE, 225-ohms per winding.....	B-12647-3
	Aa	STYLE "P-3" POLAR RELAY COMPLETE, 375-ohms per winding.....	B-12647-3
178079	2	TOP PLATE.....	B-12705-2
178515	3	CASE.....	B-12705-1
178323	4	GASKET, used between Refs.2 and 3.....	8078-1536
	5	CONTACT SPRING AND TERMINAL POST COMPLETE with Nuts and Washers (Inc.1-5a, 2-9, 1-10 and 3-11).....	12451-
178319	5a	CONTACT SPRING AND TERMINAL POST COMPLETE (without Nuts and Washers) for Ref.5.....	8385-2316
178443	6	CONTACT SPRING (R.H.) COMPLETE.....	8385-2315
178363	7	CONTACT SPRING (L.H.) COMPLETE.....	8385-2315
	8	TERMINAL POST WITH NUTS AND WASHERS (Inc.1-8a, 2-9, 1-10 and 3-11).....	12451-
160475	8a	TERMINAL POST ONLY, for Ref.8.....	8094-2207
29101	9	NUT.....	8109-193
29103	10	NUT.....	8109-194
29102	11	WASHER.....	7828-139
178306	12	SCREW.....	8098-1089
178499	13	TERMINAL CONNECTOR.....	8244-148
29956	14	NUT.....	8109-202
148190	15	POLE PIECE.....	8250-79
148191	16	ARMATURE SUPPORT.....	8303-102
178305	17	ARMATURE COMPLETE, with Pivot and Pins.....	8157-398
148181	18	SET SCREW.....	8378-350
178362	19	COIL COMPLETE with Leads (225-Ohms per winding).....	8133-417

UNION SWITCH & SIGNAL CO.

PIECE	REF.	DESCRIPTION	DWG. REF.
187212	19a	COIL COMPLETE with Leads (375-Ohms per winding)	8133-417
148189	20	PERMANENT MAGNET	12586-6
148311	21	MAGNET HOLDER	11893-396
178361	22	GLASS SHIELD	8163-212
17376	23	WASHER	7828-66
178360	24	NAME PLATE	8225-413
	25	MACHINE SCREW NO.8-36 x 7/16" Flat Hd.S. (Tin Pl.)	
	27	MACHINE SCREW NO.8-36 x 5/8" Rd.Hd.Br. (N.P.)	
	28	SCREW, NO.4 x 1/4" Rd.Hd.Hardened (Tin Pl.)	
	32	L.H. REAR TERMINAL POST COMPLETE with Nuts, Washer and Screw (Inc.1-32a, 2-9, 1-10, 3-11 and 1-33)	12451-
239033	32a	L.H. REAR TERMINAL POST COMPLETE, without Nuts, Washers and Screw	8094-2458
	33	MACHINE SCREW, NO.8-36 x 7/16" Rd.Hd.S. (Tin Pl.) with No.8 Pl.S. Lock Washer (1/16" x 3/64") (Tin Pl.) and Washer Ref.23	
	34	R.H. REAR TERMINAL POST COMPLETE with Nuts, Washer and Screw (Inc.1-34a, 2-9, 1-10, 3-11 and 1-33)	12451-
239032	34a	R.H. REAR TERMINAL POST COMPLETE, without Nuts, Washer and Screw	8094-2458

PLATE T-346

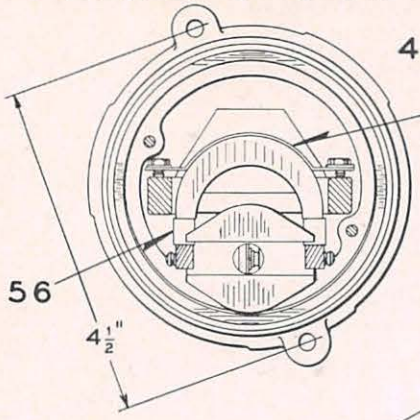

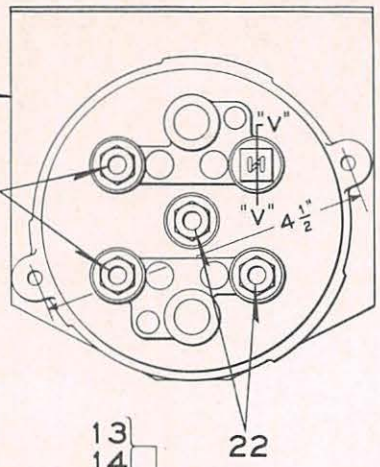

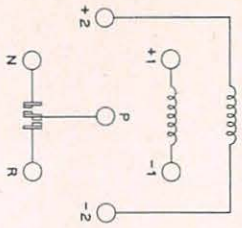

OFFICE RELAY
WIRING DIAGRAM "W"

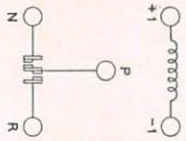

FIELD RELAY
WIRING DIAGRAM "Z"

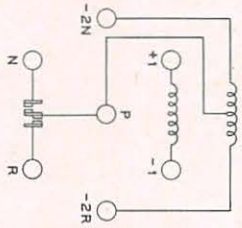

OFFICE RELAY
WIRING DIAGRAM "Y"

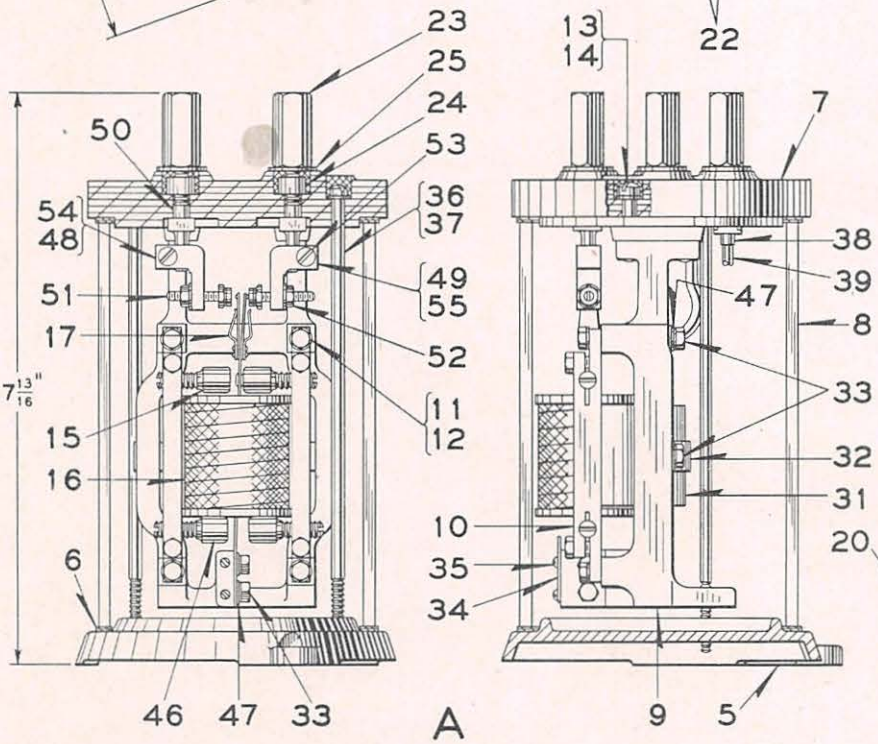

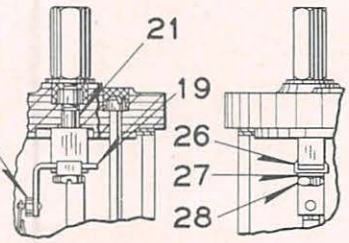

DETAILS OF ORIGINAL
DESIGN

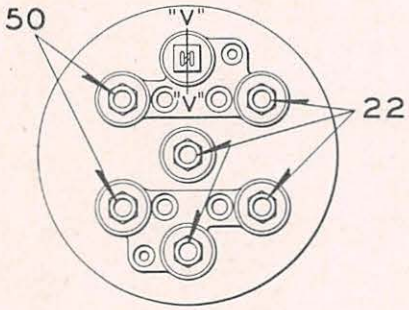

VIEW "X"

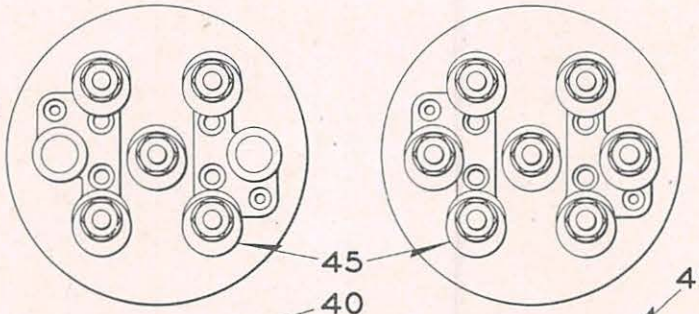

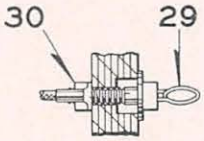

SECTION "V-V"

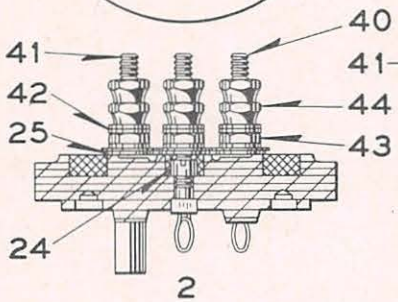

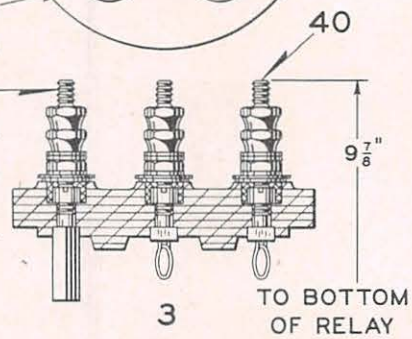

7-15-47
1-17-45

STYLE P-4 POLAR RELAY

UNION SWITCH & SIGNAL CO.

STYLE "P-4" POLAR RELAY

If Mounting Bracket Ref. 4 or 4a is desired orders should so state.

ORDER BY PLATE, PIECE, REFERENCE AND ABBREVIATED DESCRIPTION GIVEN IN HEAVY FACE TYPE STATING INSTALLATION FOR WHICH REQUIRED.

PIECE	REF.	DESCRIPTION	DWG. REF.
216111	A	STYLE "P-4" POLAR RELAY COMPLETE with Plug Connector Ref.2, 1900-Ohm Coil and wired per diagram "Z".....	C-16643-4
216112	Aa	STYLE "P-4" POLAR RELAY COMPLETE with 1900-Ohm Coil and wired per diagram "Z". Without Plug Connector.....	C-16643-4
216744	Ab	STYLE "P-4" POLAR RELAY COMPLETE (arranged per Views "X" and "T") with Plug Connector Ref.3, 310 (240-70) Ohm Coil and wired per diagram "Y".....	C-16643-4
216781	Ac	STYLE "P-4" POLAR RELAY COMPLETE (arranged per Views "X" and "T") with 310 (240-70) Ohm Coil and wired per diagram "Y". Without Plug Connector.....	C-16643-4
214139	Ad	STYLE "P-4" POLAR RELAY COMPLETE (arranged per View "X") with Plug Connector Ref.3a, 7.5 (3.0-4.5) Ohm Coil and wired per diagram "W"	C-16643-4
214796	Ae	STYLE "P-4" POLAR RELAY COMPLETE (arranged per View "X") with 7.5 (3.0-4.5) Ohm Coil and wired per diagram "W". Without Plug Connector.....	C-16643-4
250008	Af	STYLE "P-4" POLAR RELAY COMPLETE (arranged per View "X") with Plug Connector Ref.3a, 110 (70-40) Ohm Coil and wired per diagram "W"	C-16643-4
250007	Ag	STYLE "P-4" POLAR RELAY COMPLETE (arranged per View "X") with 110 (70-40) Ohm Coil and wired per diagram "W". Without Plug Connector	C-16643-4
109134	2	5-WAY PLUG CONNECTOR COMPLETE for Ref.A (Tags marked +1, -1, P, N, R).....	C-16642-7
219119	3	7-WAY PLUG CONNECTOR COMPLETE for Ref.Ab (Tags marked +1, -1, P, -2N, -2R, N, R).....	C-16642-7
107202	3a	7-WAY PLUG CONNECTOR COMPLETE for Refs.Ad and Af (Tags marked +1, -1, P, +2, -2, N, R).....	C-16642-7
221663	4	WALL MOUNTING BRACKET.....	12404-42
102701	4a	BRACKET (as shown) for mounting Relay to Office Line Coding Unit.....	10914-883
	4b	TAP BOLT, 1/2" x 3/4" Hex.Hd.S. for Ref.4a	
234611	5	BASE with Gasket Ref.6.....	C-16642-1
219978	6	GASKET.....	8078-1705
107078	7	TOP PLATE.....	C-16642-5

UNION SWITCH & SIGNAL CO.

PIECE	REF.	DESCRIPTION	DWG. REF.
213947	8	GLASS SHIELD	8163-49
107079	9	MOUNTING FRAME	C-16642-6
107149	10	BACK STRAP	8162-275
211046	11	SCREW	8098-1437
	12	LOCK WASHER, NO.6 Ph.Bz. (Shakeproof) (N.P.)	
	13	MACHINE SCREW, NO.10-30 x 7/8" Fil.Hd.S. (Tin Pl.) with Washer Ref.14	
44999	14	WASHER	7828-206
101622	15	POLE PIECE	8250-110
109618	16	COIL COMPLETE (Single Winding) 1900 Ohms, for Refs.A and Aa	8133-540
109220	16a	COIL COMPLETE (Double Winding) 310-Ohms (240-70) for Refs.Ab and Ac	8133-541
221358	16b	COIL COMPLETE (Double Winding) 7.5-Ohms (3.0-4.5) for Refs.Ad and Ae	8133-551
250006	16c	COIL COMPLETE (Double Winding) 110-Ohms (70-40) for Refs.Af and Ag	8133-551
108610	17	ARMATURE COMPLETE with Silver Tips, for Refs.A, Aa, Ad and Ae	8157-466
109954	17a	ARMATURE COMPLETE with Silver Tips, for Refs.Ab, Ac, Af and Ag	8157-466
108606	19	TERMINAL POST COMPLETE (Front or Back Post) with Silver Plat.Tip	8094-2409
193651	20	SILVER PLAT. TIP for Ref.19	8341-534
	21	TERMINAL POST with Plug Receptacle, Nut and Washers (Inc.1-21a, 1-23, 1-24, 1-25, 1-26, 1-27 and 1-28)	12451-
214032	21a	TERMINAL POST ONLY, for Ref.21	8094-982
	22	TERMINAL POST with Plug Receptacle, Nut and Washer (Inc.1-22a, 1-23, 1-24 and 1-25)	12451-
141688	22a	TERMINAL POST ONLY, for Ref.22	8094-1192
107195	23	TERMINAL POST (Plug Receptacle)	8094-2398
69706	24	NUT	8109-383
69705	25	WASHER	7828-287
109438	26	LOCK WASHER	8486-310
	27	LOCK WASHER, NO.10 Ph.Bz. (Shakeproof) (N.P.)	
189165	28	SCREW	8098-403
243216	29	TERMINAL POST (Plug), with Nut and Washer (Inc.1-29a, 1-25 and 1-30)	12451-307
107894	29a	TERMINAL POST ONLY, for Ref.29	8094-2399
410442	30	NUT	

UNION SWITCH & SIGNAL CO.

PIECE	REF.	DESCRIPTION	DWG. REF.
101635	31	PERMANENT MAGNET	12586-13
234612	32	PERMANENT MAGNET CLAMP COMPLETE	10914-1037
162755	33	SCREW	8098-165
107155	34	NAME PLATE	8225-538
	35	MACHINE SCREW, NO.4-40 x 1/4" Rd.Hd. (N.P.)	
107243	36	SCREW	8098-1425
195397	37	WASHER	7828-368
133634	38	TERMINAL	8244-120
	39	TUBING, .097" I.D. x .157" O.D. Black Varnished Cambric (Orders should specify length desired)	
243215	40	TERMINAL POST (Plug) with Nuts and Washers (Inc.1-40a, 1-24, 1-25, 3-42, 1-43 and 2-44)	12451-369
107197	40a	TERMINAL POST (Plug) ONLY, for Ref.40	8094-2399
	41	TERMINAL POST (Plug Receptacle) with Nuts and Washers (Inc.1-41a, 1-24, 1-25, 3-42, 1-43 and 2-44)	12451-
107891	41a	TERMINAL POST ONLY, (Plug Receptacle), for Ref.41	8094-2401
29102	42	WASHER	7828-139
29103	43	NUT	8109-194
29101	44	NUT	8109-193
142777	45	TAG (Orders should specify marking desired)	8988-75
246932	46	POLE PIECE	8250-110
20686	47	WASHER	7828-108
237065	48	FRONT CONTACT POST COMPLETE (Inc.1-51, 1-53 and 1-54)	8094-2418
237064	49	BACK CONTACT POST COMPLETE (Inc.1-51, 1-53 and 1-55)	8094-2418
	50	TERMINAL POST with Plug Receptacle, Nut and Washer (Inc.1-50a, 1-23, 1-24 and 1-25)	12451-
237106	50a	TERMINAL POST ONLY	8094-2417
	51	CONTACT POST COMPLETE (Sil.Plat.) (Inc.1-51a, 1-12 and 1-52)	8094-
221115	51a	CONTACT POST ONLY (Sil.Plat.)	8094-2369
1505	52	NUT	8109-11
	53	SCREW, NO.6-40 x 3/8" Flat Hd.S. (Tin Pl.)	
219727	54	L.H. CONTACT SUPPORT	C-16642-9
219041	55	R.H. CONTACT SUPPORT	C-16642-9

UNION SWITCH & SIGNAL CO.

PIECE	REF.	DESCRIPTION	DWG. REF.
242735	56	PERMANENT MAGNET SPACER	8072-941
242737	57	PERMANENT MAGNET CLAMP	11893-1023

7-15-47

PLATE T-350

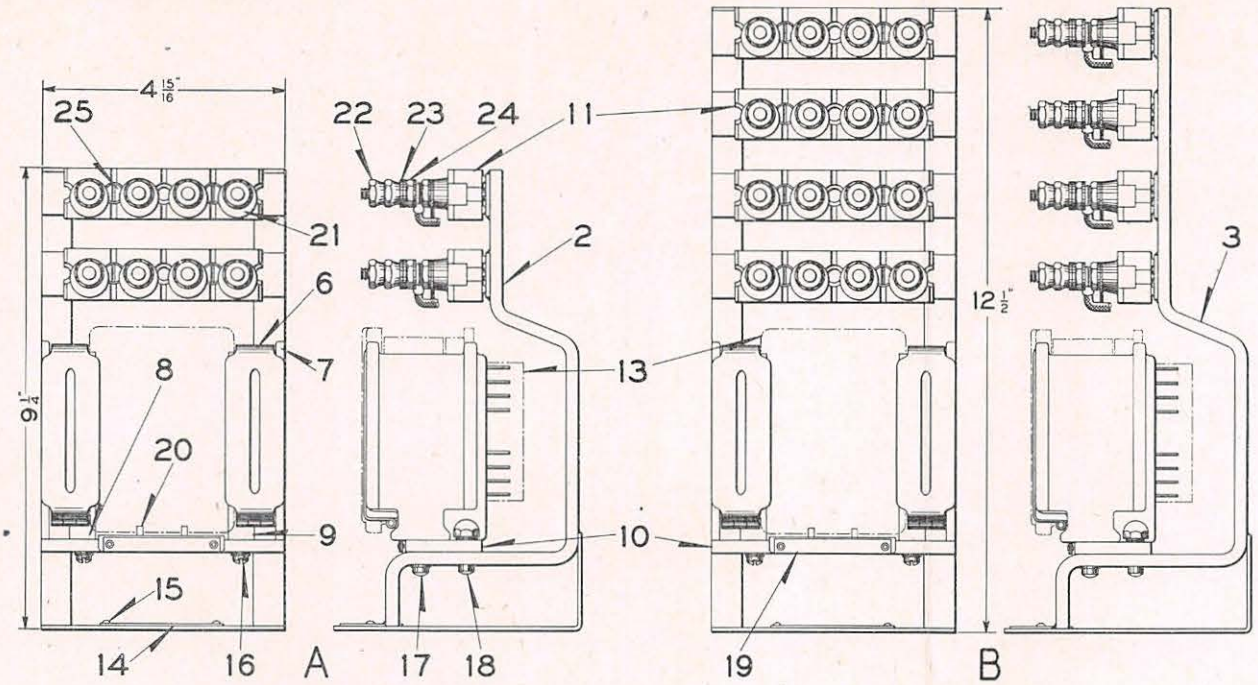

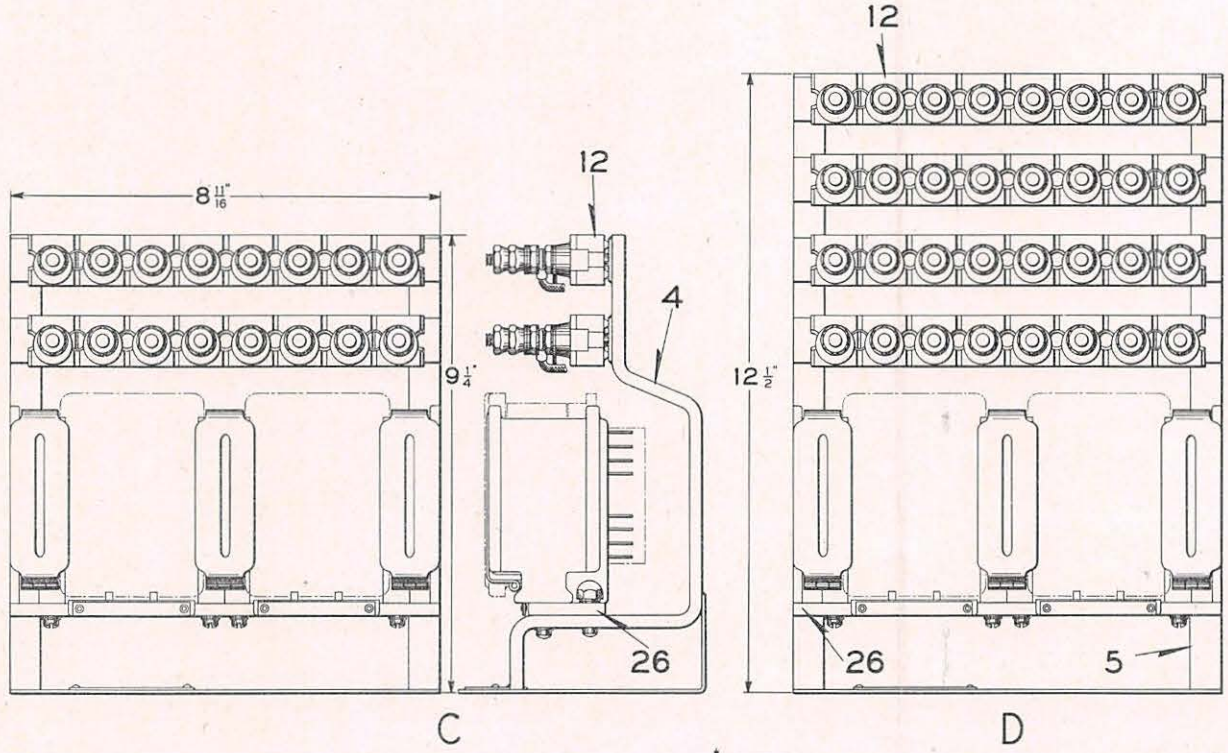

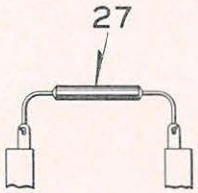

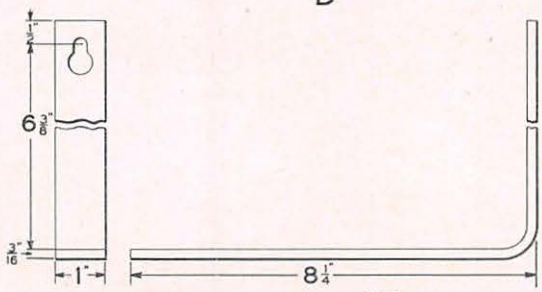

RACKS FOR "KP" RELAYS

1-18-43

UNION SWITCH & SIGNAL CO.

RELAY RACKS FOR "KP" RELAYS

If Wall Mounting Brackets Ref.28 are desired orders should so state.

Order by Plate, Piece, Reference and Abbreviated Description Given in Heavy Face Type Only

PIECE	REF.	DESCRIPTION	DWG. REF.
	A	SINGLE UNIT STYLE "KP" RELAY RACK with two Terminal Boards, Plug Connectors and Pins (Without Relay)	C-16809-4
	* Aa	SINGLE UNIT STYLE "KP" RELAY RACK with two Terminal Boards, Plug Connectors, Pins and Relay as shown in dot and dash lines	C-16809-4
	B	SINGLE UNIT STYLE "KP" RELAY RACK with four Terminal Boards, Plug Connectors and Pins (Without Relay)	C-16809-2
	* Ba	SINGLE UNIT STYLE "KP" RELAY RACK with four Terminal Boards, Plug Connectors, Pins and Relay as shown in dot and dash lines	C-16809-2
	C	TWIN UNIT STYLE "KP" RELAY RACK with two Terminal Boards, Plug Connectors and Pins (Without Relays)	C-16809-3
	* Ca	TWIN UNIT STYLE "KP" RELAY RACK with two Terminal Boards, Plug Connectors, Pins and Relays as shown in dot and dash lines	C-16809-3
	D	TWIN UNIT STYLE "KP" RELAY RACK with four Terminal Boards, Plug Connectors and Pins (Without Relays)	C-16809-1
	* Da	TWIN UNIT STYLE "KP" RELAY RACK with four Terminal Boards, Plug Connectors, Pins and Relays as shown in dot and dash lines	C-16809-1
		* When ordering for replacement give relay nomenclature and the installation for which required. When ordering rack with relay not for replacement give circuit and battery requirements. Also state nomenclature required for stamping on relay guide tag.	
231349	2	RELAY RACK COMPLETE for Refs.A and Aa	C-16810-7
231348	3	RELAY RACK COMPLETE for Refs.B and Ba	C-16810-7
231347	4	RELAY RACK COMPLETE for Refs.C and Ca	C-16810-6
231346	5	RELAY RACK COMPLETE for Refs.D and Da	C-16810-6
191435	6	LOCK PLATE	9925-33
191445	7	DUMMY CONNECTOR	12770-18
191406	8	L.H. PLUG CONNECTOR COMPLETE	12789-1
191407	9	R.H. PLUG CONNECTOR COMPLETE	12789-1
231339	10	RELAY SUPPORT STRAP for Refs.A to Ba inclusive	8750-3056
107471	11	4-WAY TERMINAL BLOCK (Without Nuts, Washers and Tags)	9968-1255

UNION SWITCH & SIGNAL CO.

PIECE	REF.	DESCRIPTION	DWG. REF.
223608	12	8-WAY TERMINAL BLOCK (Without Nuts, Washers and Tags)	9968-1255
	13	STYLE "KP" RELAY. For details refer to Plate T-358	B-12786-2
229579	14	NAME PLATE	8225-599
54920	15	RIVET for attaching Name Plate to Rack	10301-1
	16	MACHINE SCREW, NO.10-30 x 1/2" Fil.Hd.S. (Tin Pl.) with Washer Ref.16a and No.10 S.Lock Washer (Tin Pl.)	
73129	16a	WASHER	7826-180
	17	MACHINE SCREW, NO.10-30 x 3/4" Fil.Hd.S. (Tin Pl.) with No.10 S.Lock Washer (Tin Pl.)	
	18	MACHINE SCREW, NO.10-30 x 3/4" Fil.Hd.S. (Tin Pl.) with Washer Ref. 16a, No.10 S.Lock Washer (Tin Pl.) and Nut Ref.18a	
15129	18a	NUT	8109-78
231154	19	RELAY GUIDE with Tag (Orders should specify marking desired on Tag).	11893-893
191422	20	PIN	8114-951
142777	21	TAG (Orders should specify marking desired)	8988-75
29101	22	NUT	8109-193
29102	23	WASHER	7828-139
29103	24	NUT	8109-194
	25	MACHINE SCREW, NO.14-24 x 3/4" Fil.Hd.S. (Tin Pl.) with 1/4" S.Lock Washer (Tin Pl.), Washer Ref.25a and Nut Ref.25b	
53627	25a	WASHER	7828-218
93420	25b	NUT	8265-128
231338	26	RELAY SUPPORT STRAP for Refs.C to Da inclusive	8750-3056
	27	RESISTOR. Orders should specify resistance required	9065-305
229708	28	WALL MOUNTING BRACKET	10914-1327
	29	MACHINE SCREW, NO.10-32 x 5/16" Fil.Hd.S. (Tin Pl.) with No.10 S. Lock Washer (Tin Pl.) for attaching Bracket Ref.28 to Rack (Not shown)	
47290	30	TWO-WAY TERMINAL CONNECTOR (Not shown). Used between two adjacent posts of Terminal Block	8064-305

PLATE T-358

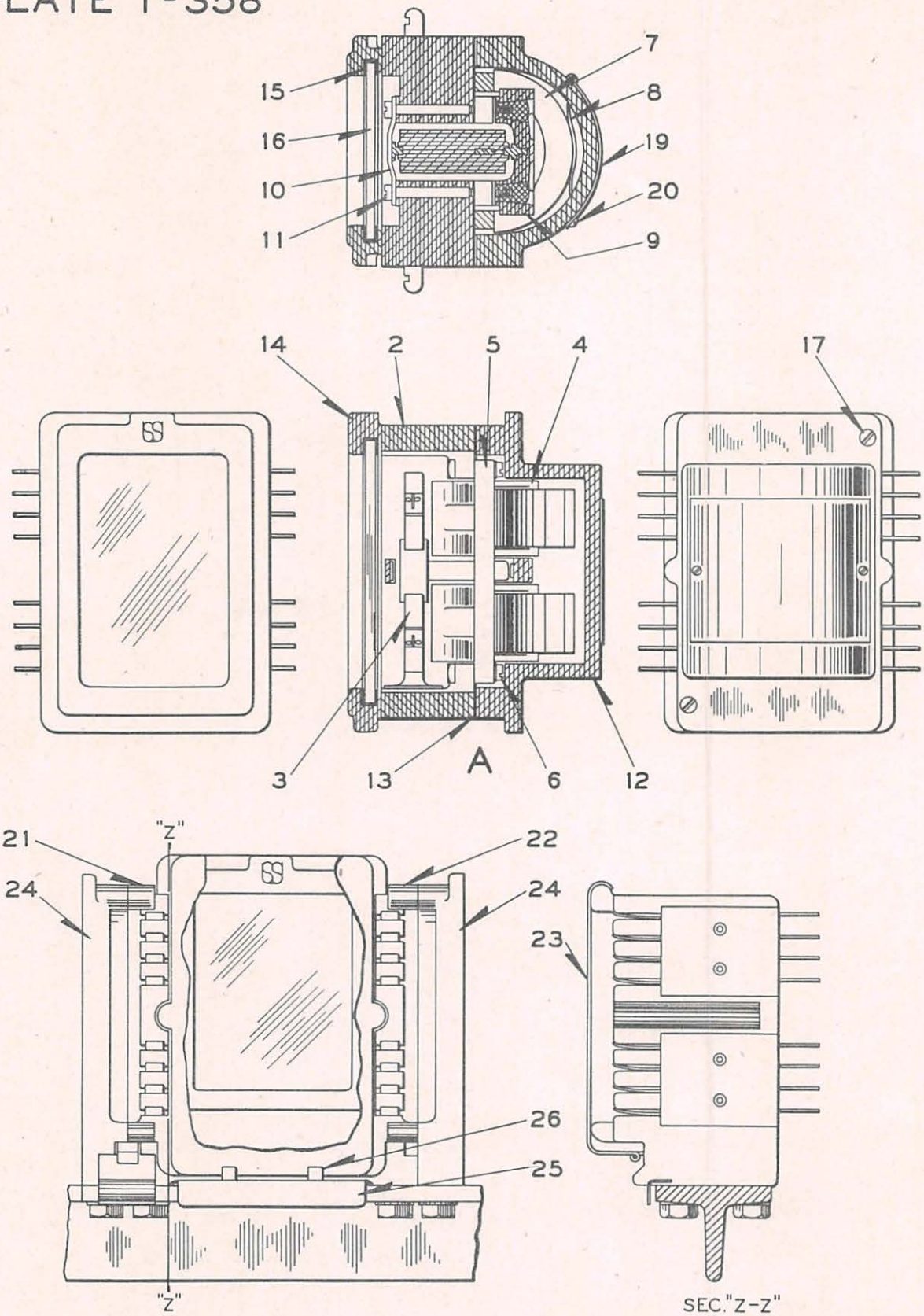

MOUNTING ARRANGEMENT FOR "KP" RELAYS.

STYLE "KP" RELAY

1-18-43

UNION SWITCH & SIGNAL CO.

STYLE "KP" RELAY

Style "KP" Relays are furnished in various combinations as regards type of operation, contact combinations and adjustment, also energy operating values.

A full set of code digits is moulded in the back cover of the relay. The numbers remaining after the code slots have been cut form the code number of the relay.

To insure obtaining correct combination the following points should be observed: when ordering relay for replacement give "Code Number" and Piece Number as provided on each relay and the installation; when ordering relay not for replacement give circuit and battery requirements. The replacing of internal parts involves extremely accurate balancing so that unless a repair shop is completely fitted to repair these relays we advise that they should be returned to our shop or a new relay ordered.

Order by Plate, Piece, Reference and Abbreviated Description Given in Heavy Face Type Only

PIECE	REF.	DESCRIPTION	DWG. REF.
	A	STYLE "KP" RELAY with 2N-2R Ind. Contacts	B-12786-2
	Aa	STYLE "KP" RELAY with 4N-4R Non-Ind. Contacts	B-12786-2
191480	2	FRAME COMPLETE for Ref.A	12770-19
191363	2a	FRAME COMPLETE for Ref.Aa	12770-10
	3	ROTOR COMPLETE with Armature. When ordering state nomenclature of Relay for which required and installation	8385-2648
191393	4	COIL, 0.86-Ohms	8133-529
191478	4a	COIL, 3.2-Ohms	8133-529
191498	4b	COIL, 12.5-Ohms	8133-529
226572	4c	COIL, 20-Ohms	8133-529
231411	4d	COIL, 33-Ohms	8133-529
231410	4e	COIL, 75-Ohms	8133-529
191479	4f	COIL, 105-Ohms	8133-529
220783	4g	COIL, 1070-Ohms	8133-529
248743	4h	COIL, 3800-Ohms	8133-529
191385	5	YOKE	8162-274
	6	MACHINE SCREW, NO.6-40 x 11/16" Flat Fil.Hd.Br. (N.P.) with No.6 Ph. Bz.Lock Washer (M) (N.P.) and Nut Ref.6a	
151836	6a	NUT	8109-445
251407	7	PERMANENT MAGNET with Flat Spring Ref.8	12586-25
191389	8	FLAT SPRING	8735-930
241325	9	BACK PIVOT BRACKET COMPLETE	12770-13
191429	10	FRONT PIVOT BRACKET COMPLETE	12748-18
	11	MACHINE SCREW, NO.6-40 x 1-11/16" Flat Fil.Hd.Br. (N.P.) with Nut Ref.11a and No.6 Pl.S.Lock Washer (M) (Tin Pl.)	

UNION SWITCH & SIGNAL CO.

PIECE	REF.	DESCRIPTION	DWG. REF.
242271	11a	NUT	8109-346
	12	BACK COVER. When ordering state nomenclature of Relay for which required and installation	12770-52
191394	13	GASKET	8078-1675
241324	14	FRONT COVER COMPLETE	12770-12
191416	15	GASKET	8078-1676
191415	16	SHIELD	8163-325
	17	MACHINE SCREW, NO.4-48 x 1-3/4" Fil.Hd.Br. (N.P.)	
164047	18	RIVET (Not shown)	12579-2
109871	19	NAME PLATE	8225-548
	20	SCREW, NO.4-40 x 1/4" (Tin Pl.)	
191406	21	L.H. PLUG CONNECTOR COMPLETE	12789-1
191407	22	R.H. PLUG CONNECTOR COMPLETE	12789-1
191435	23	LOCK PLATE	9925-33
191445	24	DUMMY CONNECTOR	12770-18
231154	25	RELAY GUIDE with Tag (Orders should specify marking desired on Tag).	11893-893
191422	26	PIN	8114-951

PLATE T-378

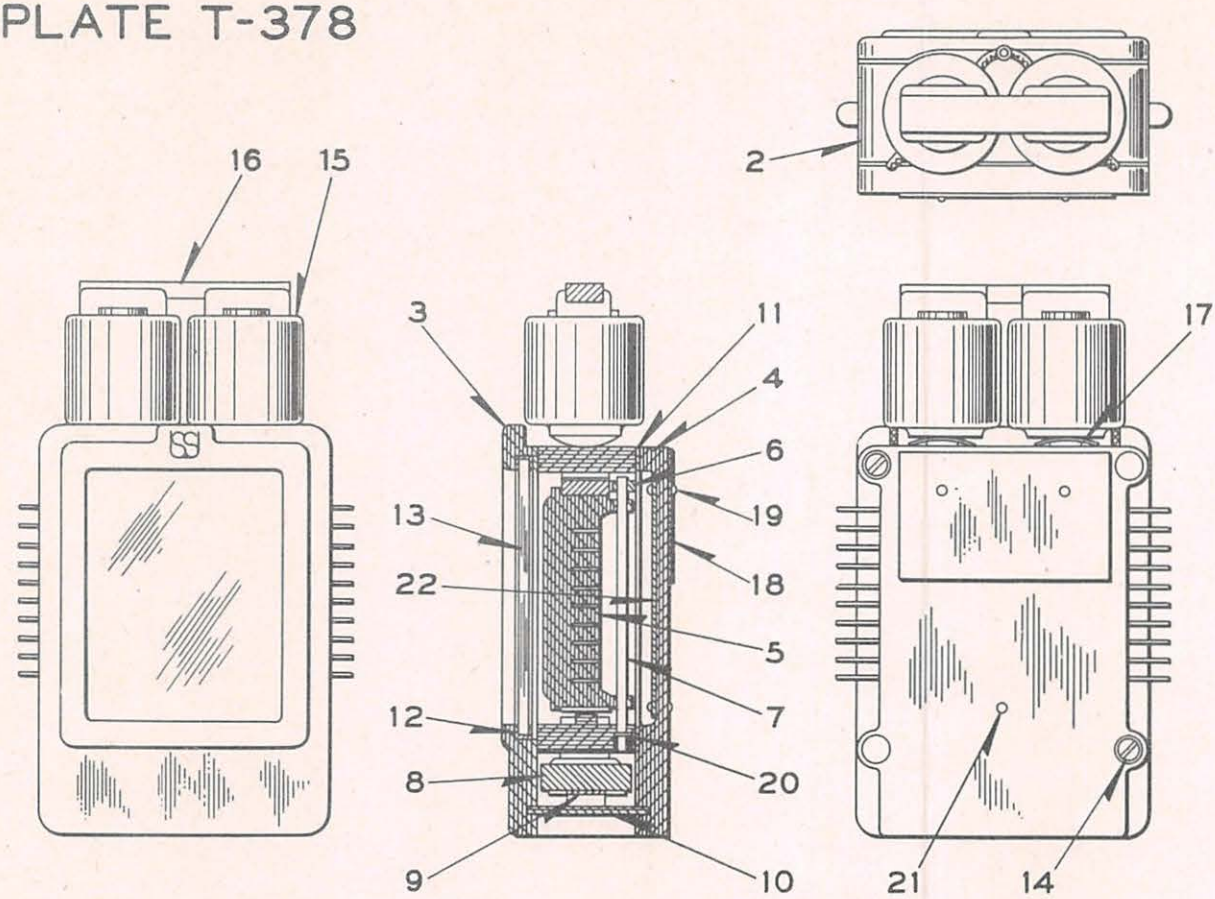

A

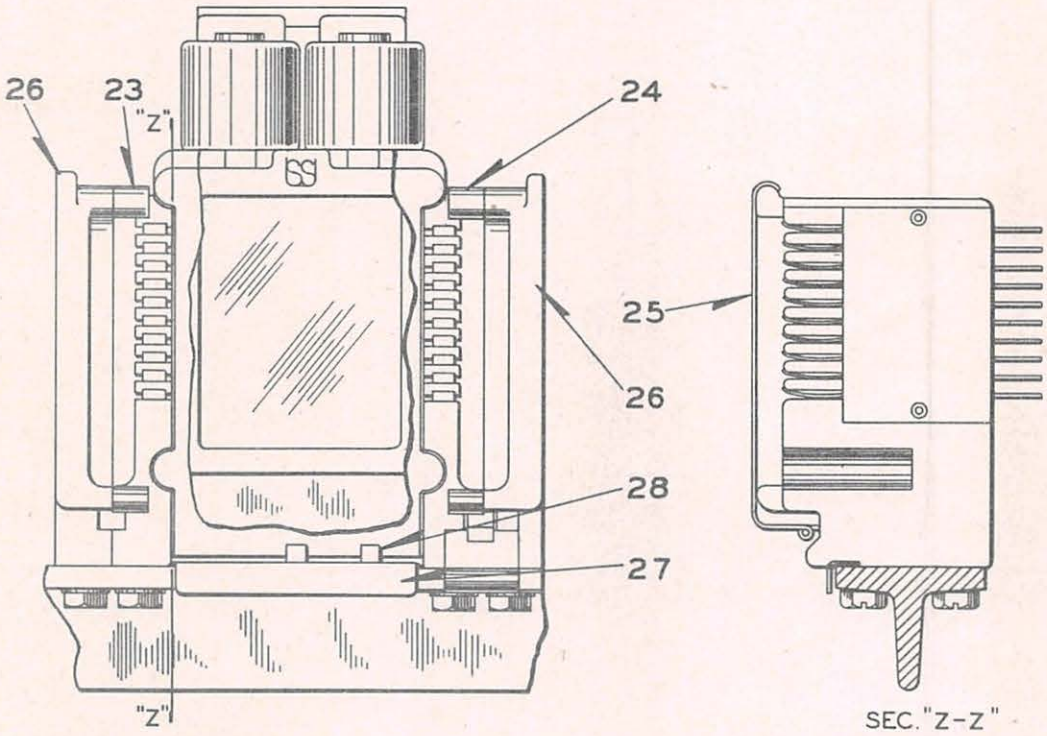

MOUNTING ARRANGEMENT FOR "KN" RELAYS

STYLE "KN" RELAYS

1-18-43

UNION SWITCH & SIGNAL CO.

STYLE "KN" RELAY

When ordering for replacement give relay nomenclature and the installation for which required. When ordering relay not for replacement give circuit and battery requirements. The replacing of internal parts involves extremely accurate balancing so that unless a repair shop is completely fitted to repair these relays we advise that they should be returned to our shop or a new relay ordered.

Order by Plate, Piece, Reference and Abbreviated Description Given in Heavy Face Type Only

PIECE	REF.	DESCRIPTION	DWG. REF.
	A	STYLE "KN" RELAY with 6F-3B Contacts	B-12785-2
191454	2	FRAME COMPLETE	12770-5
191460	3	FRONT COVER COMPLETE	12770-8
	4	BACK COVER. When ordering state nomenclature of Relay for which required and installation	12770-53
191463	5	CONTACT DRIVE COMPLETE	12770-6
191471	6	ARMATURE GUIDE	11893-889
191397	7	GUIDE ROD	8097-940
213552	8	PERMANENT MAGNET	12586-18
191398	9	FLAT SPRING	8735-928
191361	10	INSULATION	8750-2931
191403	11	GASKET	8078-1673
191402	12	GASKET	8078-1672
191404	13	SHIELD	8163-324
	14	MACHINE SCREW, NO.4-48 x 1-5/16" Fil.Hd.Br. (N.P.)	
191476	15	COIL, 30-Ohms	8133-552
224503	15a	COIL, 70-Ohms	8133-552
224530	15b	COIL, 115-Ohms	8133-552
224504	15c	COIL, 175-Ohms	8133-552
231537	15d	COIL, 300-Ohms	8133-552
191473	16	BACK STRAP COMPLETE	8162-273
224429	17	COIL LOCK	7828-421
225868	18	NAME PLATE	8225-591
228987	19	RIVET	12579-6

UNION SWITCH & SIGNAL CO.

PIECE	REF.	DESCRIPTION	DWG. REF.
226626	20	WASHER	7828-419
229094	21	RIVET	12579-6
225867	22	TAG	8988-172
191441	23	L.H. PLUG CONNECTOR COMPLETE	12789-2
191442	24	R.H. PLUG CONNECTOR COMPLETE	12789-2
191435	25	LOCK PLATE	9925-33
191445	26	DUMMY CONNECTOR	12770-18
	27	RELAY GUIDE with Tag (Orders should specify marking desired on Tag).	11893-895
191422	28	PIN	8114-951

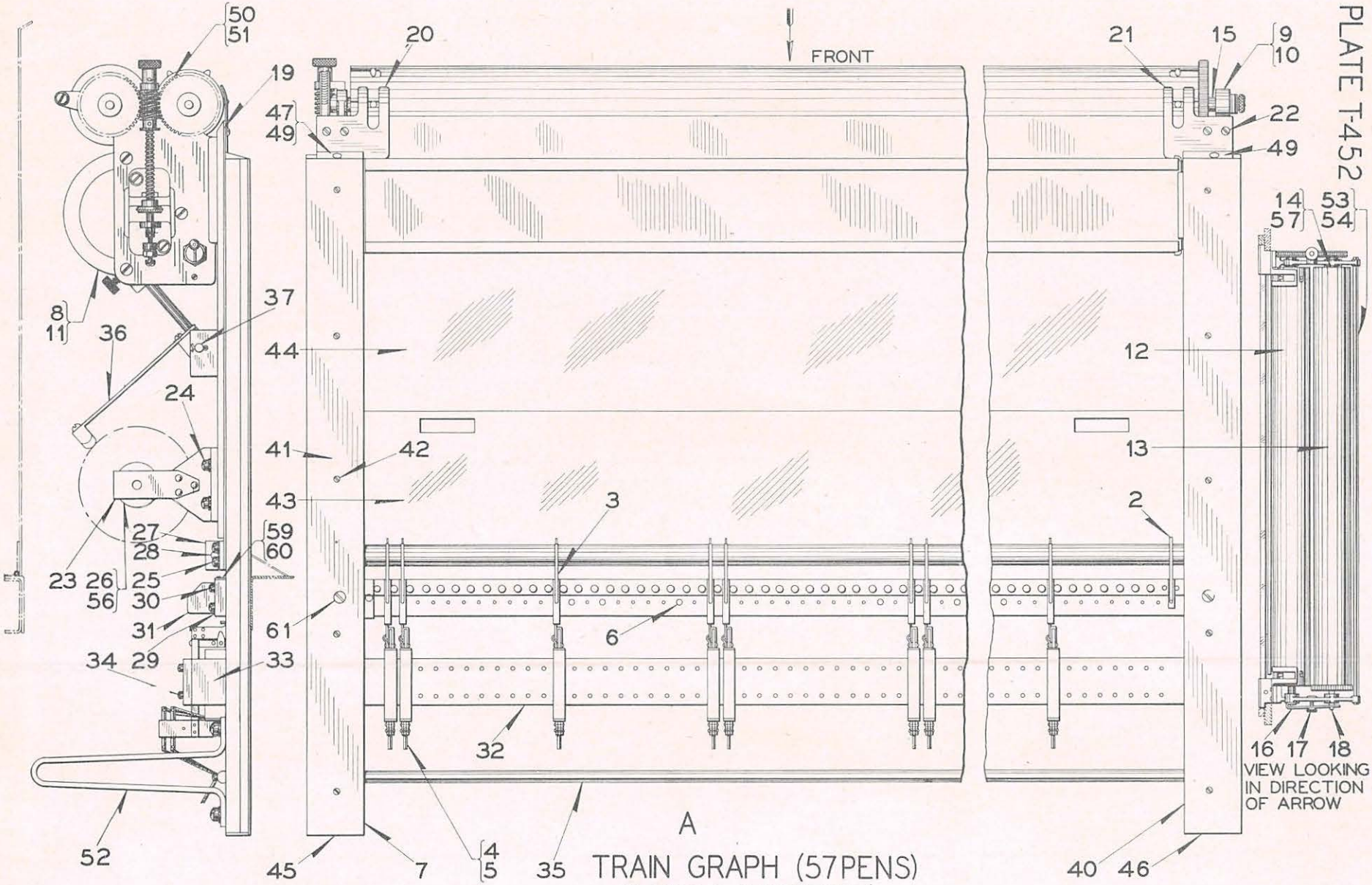

A

TRAIN GRAPH (57 PENS)
(2 AND 3 POSITION)

PLATE T-452

UNION SWITCH & SIGNAL CO.

57 PEN TRAIN GRAPH (2 and 3 Position) - TELECHRON DRIVE

3" Movement of paper per hour

Original style Graph using Take Up Roll and Pins on Driving Roll.

ORDER BY PLATE, PIECE, REFERENCE AND ABBREVIATED DESCRIPTION GIVEN IN HEAVY FACE TYPE STATING INSTALLATION FOR WHICH REQUIRED.

PIECE	REF.	DESCRIPTION	DWG. REF.
	A	57 PEN TRAIN GRAPH COMPLETE, with 2 Position Pen Magnets as shown	C-9365-3
	Aa	57 PEN TRAIN GRAPH COMPLETE, with 3 Position Pen Magnets	C-9365-5
	2	PILOT PEN (For details refer to Plate T-498)	12681-2
	3	PEN COMPLETE for 2 Position Graph (For details refer to Plate T-498)	12681-3
	3a	PEN COMPLETE for 3 Position Graph (For details refer to Plate T-498)	12681-3
	4	2 POSITION PEN MAGNET COMPLETE (For details refer to Plate T-498)	8133-401
	4a	3 POSITION PEN MAGNET COMPLETE (For details refer to Plate T-498)	8133-580
	5	MACHINE SCREW, NO.6-40 x 1/2" Fil.Hd.Br. (N.P.) for Ref.4	
	5a	MACHINE SCREW, NO.6-40 x 3/8" Fil.Hd.Br. (N.P.) with No.6 Lock Washer (Int.Teeth) (Tin Pl.) for Ref.4a	
168133	6	BUTTON (Used in Blank Spaces)	8097-1038
102464	7	BASE PLATE COMPLETE	C-9348-31
102561	8	DRIVING MECHANISM COMPLETE 110-Volts, 60-Cycles (For details refer to Plate T-478)	C-9348-33
221456	8a	DRIVING MECHANISM COMPLETE 110/120-Volts, 60-Cycles (For details refer to Plate T-478)	C-9348-33
164081	9	END SUPPORT	C-9348-2
	10	MACHINE SCREW, NO.10-30 x 1-1/8" Flat Hd.Br. (N.P.)	
	11	MACHINE SCREW, NO.10-30 x 1/2" Flat Hd.Br. (N.P.) for attaching Driving Mechanism to Base Plate	
109379	12	DRIVE ROLL COMPLETE	C-9348-37
208813	13	TAKE UP ROLL COMPLETE	C-9348-41
183178	14	PIVOT SHAFT	12501-59
168093	15	PIVOT SHAFT	12501-70
168078	16	RETAINING SPRING COMPLETE	8735-721

UNION SWITCH & SIGNAL CO.

PIECE	REF.	DESCRIPTION	DWG. REF.
168095	17	SCREW	8098-675
168094	18	SCREW	8098-674
168055	19	SHIM	11893-546
104173	20	PAPER CLIP, R.H.	8735-885
104174	21	PAPER CLIP, L.H.	8735-885
	22	MACHINE SCREW, NO.6-40 x 1/4" Rd.Hd.S. (N.P.)	
105728	23	L.H. BRACKET COMPLETE	C-9348-16
105729	23a	R.H. BRACKET COMPLETE	C-9348-16
	24	MACHINE SCREW, NO.10-30 x 5/8" Fil.Hd.Br. (N.P.) with No.10 Pl.S. Lock Washer (M) (Tin Pl.)	
	25	MACHINE SCREW, NO.10-30 x 1/2" Fil.Hd.Br. (N.P.) with No.10 Pl.S. Lock Washer (M) (Tin Pl.)	
216643	26	PAPER ROLL SUPPORT SHAFT COMPLETE with two Nuts Ref.56	C-9348-24
168114	27	BRACKET	10914-280
208823	28	ROLLER	12501-67
223030	29	PEN HOLDER COMPLETE for 2 Position Pens	C-9348-40
248253	29a	PEN HOLDER COMPLETE for 3 Position Pens	C-9348-43
	30	MACHINE SCREW, NO.6-40 x 1/2" Fil.Hd.Br. (N.P.)	
208748	31	INKWELL COMPLETE	C-9348-4
257246	32	MAGNET SUPPORT COMPLETE for 2 Position Magnets	C-9348-40
257248	32a	MAGNET SUPPORT COMPLETE for 3 Position Magnets	C-9348-43
168054	33	SPACER	9999-792
	34	MACHINE SCREW, NO.6-40 x 1-1/2" Fil.Hd.Br. (N.P.)	
208824	35	CABLE SUPPORT	12501-68
168104	36	BRAKE COMPLETE	C-9348-3
74925	37	PIN with two 1/16" x 3/8" S.Cotters (Tin Pl.)	B-10203-1
209512	38	SPACER COMPLETE (Used under R.H. Side of Base Plate) (Not shown)	C-9348-10
185454	39	SPACER COMPLETE (Used under L.H. Side of Base Plate) (Not shown)	C-9348-10
168129	40	CLAMPING STRIP, L.H.	C-9348-3
168130	41	CLAMPING STRIP, R.H.	C-9348-3
	42	MACHINE SCREW, NO.6-40 x 3/8" Flat Hd.Br. (N.P.)	
208869	43	GLASS TOP	C-9348-11

UNION SWITCH & SIGNAL CO.

PIECE	REF.	DESCRIPTION	DWG. REF.
208870	44	GLASS TOP	C-9348-11
168086	45	STOP, R.H.	11893-552
168087	46	STOP, L.H.	11893-552
168088	47	STOP, R.H.	12538-96
168089	48	STOP, L.H.	12538-96
	49	MACHINE SCREW, NO.4-48 x 3/8" Flat Hd.Br. (N.P.)	
102399	50	WORM GEAR	8424-292
215975	51	PIN	8097-466
242968	52	LEG	10914-1596
208828	53	ROD	8114-792
	54	MACHINE SCREW, NO.6-40 x 5/8" Fil.Hd.Br. (N.P.)	
57497	55	PIN (For attaching Driving Mechanism to Base Plate) (Not shown)	8097-872
105712	56	NUT	8350-780
168090	57	WASHER	8078-1483
	58	MACHINE SCREW, NO.2-64 x 1/8" Flat Hd.Br. (Tin Pl.) (Not shown)	
103464	59	PAPER CLIP	C-9348-35
	60	MACHINE SCREW, NO.2-64 x 3/16" Rd.Hd.Br. (N.P.)	
	61	MACHINE SCREW, NO.10-32 x 1" Flat Hd.Br. (N.P.)	
	62	MACHINE SCREW, NO.14-24 x 1/2" Fil.Hd.S. (Tin Pl.) with 1/4" Pl.S. Lock Washer (M) (Tin Pl.)	
C.N.66197	63	BEARING	
232385	64	BUSHING	8350-985
232386	65	BUSHING	8350-985

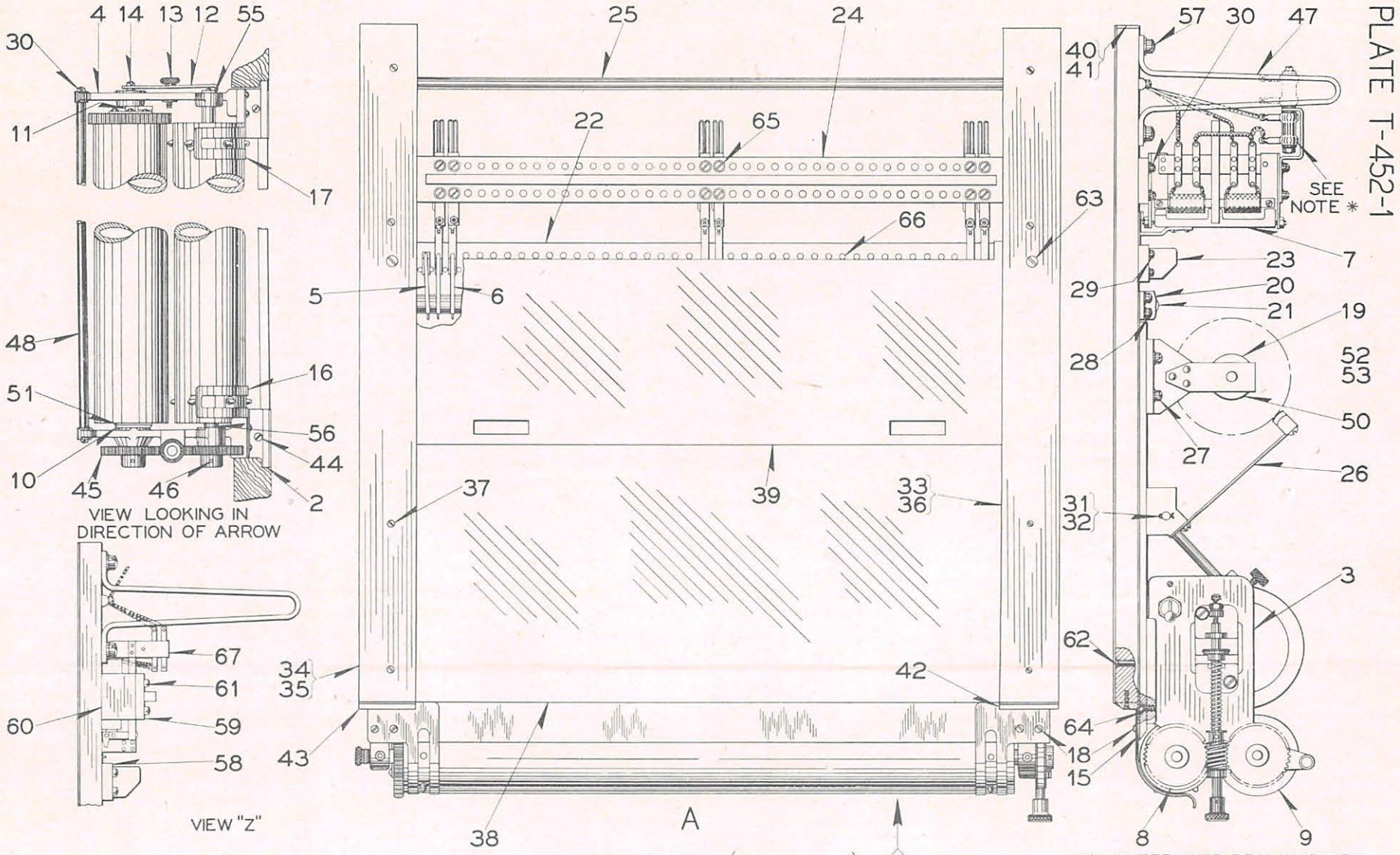

TRAIN GRAPH (40 PENS)
(2 AND 3 POSITION)

UNION SWITCH & SIGNAL CO.

40 PEN TRAIN GRAPH (2 and 3 Position) - TELECHRON DRIVE

3" Movement of paper per hour

Original style Graph using Take Up Roll and Pins on Driving Roll.

ORDER BY PLATE, PIECE, REFERENCE AND ABBREVIATED DESCRIPTION GIVEN IN HEAVY FACE TYPE STATING INSTALLATION FOR WHICH REQUIRED.

PIECE	REF.	DESCRIPTION	DWG. REF.
	A	40 PEN TRAIN GRAPH WITH 3 POSITION PEN MAGNETS as shown.....	C-9365-4
	Aa	40 PEN TRAIN GRAPH WITH 2 POSITION PEN MAGNETS per View "Z"..	C-9365-2
168147	2	BASE PLATE COMPLETE.....	C-9348-6
102561	3	DRIVING MECHANISM COMPLETE, 110 Volts, 60 Cycles. For details refer to Plate T-478.....	C-9348-33
221456	3a	DRIVING MECHANISM COMPLETE, 110/120 Volts, 50 Cycles. For details refer to Plate T-478.....	C-9348-33
164081	4	END SUPPORT.....	C-9348-2
	5	PILOT PEN (For details refer to Plate T-498).....	12681-2
	6	PEN COMPLETE for 3 Position Graph (For details refer to Plate T-498).	12681-3
	7	3 POSITION PEN MAGNET COMPLETE (For details refer to Plate T-498).....	8133-580
107189	8	DRIVE ROLL COMPLETE.....	C-9348-37
170206	9	TAKE UP ROLL COMPLETE.....	C-9348-37
168091	10	PIVOT SHAFT.....	12501-59
168093	11	PIVOT SHAFT.....	12501-70
168078	12	RETAINING SPRING COMPLETE.....	8735-721
168095	13	SCREW.....	8098-675
168094	14	SCREW.....	8098-674
168055	15	SHIM.....	11893-546
168096	16	R.H. PAPER CLIP.....	8735-725
168097	17	L.H. PAPER CLIP.....	8735-725
	18	MACHINE SCREW, NO.6-40 x 1/4" Rd.Hd.S. (N.P.)	
105684	19	PAPER ROLL SUPPORT SHAFT COMPLETE.....	C-9348-24
168114	20	BRACKET.....	10914-280
170211	21	ROLLER.....	12501-67

UNION SWITCH & SIGNAL CO.

PIECE	REF.	DESCRIPTION	DWG. REF.
239371	22	PEN HOLDER COMPLETE for 3 Position Pens	C-9348-42
168141	23	INKWELL COMPLETE	C-9348-4
257247	24	MAGNET SUPPORT COMPLETE for 3 Position Magnets	C-9348-42
170212	25	CABLE SUPPORT	12501-68
168104	26	BRAKE COMPLETE	C-9348-3
	27	MACHINE SCREW, NO.10-30 x 5/8" Fil.Hd.Br. (N.P.) with No.10 Pl.S. Lock Washer (M) (Tin Pl.)	
	28	MACHINE SCREW, NO.10-30 x 1/2" Fil.Hd.Br. (N.P.) with No.10 Pl.S. Lock Washer (M) (Tin Pl.)	
	29	MACHINE SCREW, NO.6-40 x 1/2" Fil.Hd.Br. (N.P.) with No.6 S.Lock Washer (Int.Teeth) (Tin Pl.)	
	30	MACHINE SCREW, NO.6-40 x 5/8" Fil.Hd.Br. (N.P.) with No.6 S.Lock Washer (Int.Teeth) (Tin Pl.)	
74925	31	PIN	B-10203-1
	32	COTTER PIN, 1/16" x 3/8" S. (Tin Pl.)	
209512	33	R.H. SPACER COMPLETE (Used under Ref.36)	C-9348-10
185454	34	L.H. SPACER COMPLETE (Used under Ref.35)	C-9348-10
168129	35	L.H. CLAMPING STRIP	C-9348-3
168130	36	R.H. CLAMPING STRIP	C-9348-3
	37	MACHINE SCREW, NO.6-40 x 3/8" Flat Hd.Br. (N.P.)	
170219	38	GLASS TOP (Front)	C-9348-11
170218	39	GLASS TOP (Rear)	C-9348-11
168086	40	R.H. STOP	11893-552
168087	41	L.H. STOP	11893-552
168088	42	R.H. STOP	12538-96
168089	43	L.H. STOP	12538-96
	44	MACHINE SCREW, NO.4-48 x 3/8" Flat Hd.Br. (N.P.)	
102399	45	GEAR	8424-292
215975	46	PIN	8097-466
242968	47	LEG	10914-1596
175240	48	ROD	8114-792
57497	49	PIN (For attaching Driving Mechanism to Base Plate) (Not shown)	8097-872
105712	50	NUT	8350-780

UNION SWITCH & SIGNAL CO.

PIECE	REF.	DESCRIPTION	DWG. REF.
168090	51	WASHER for Pivot Shaft	8078-1483
105728	52	L.H. BRACKET COMPLETE	C-9348-16
105729	53	R.H. BRACKET COMPLETE	C-9348-16
C.N.66197	54	BEARING (Not shown)	
232385	55	BUSHING	8350-985
232386	56	BUSHING	8350-985
	57	MACHINE SCREW, NO.14-24 x 1/2" Fil.Hd.S. (Tin Pl.) with 1/4" Pl.S. Lock Washer (M) (Tin Pl.)	
168143	58	PEN HOLDER COMPLETE, for 2 Position Pens	C-9348-4
257244	59	MAGNET SUPPORT COMPLETE,for 2 Position Magnets	C-9348-4
168054	60	SPACER	9999-792
	61	MACHINE SCREW, NO.6-40 x 1-1/2" Fil.Hd.Br. (N.P.)	
	62	MACHINE SCREW, NO.10-30 x 1-1/8" Flat Hd.Br. (N.P.)	
	63	MACHINE SCREW, NO.10-32 x 1" Flat Hd.Br. (N.P.)	
	64	MACHINE SCREW, NO.10-30 x 1/2" Flat Hd.Br. (N.P.)	
	65	MACHINE SCREW, NO.6-40 x 3/8" Fil.Hd.Br. (N.P.) with No.6 S.Lock Washer (Int.Teeth) (Tin Pl.)	
168133	66	BUTTON	8097-1038
	67	2 POSITION PEN MAGNET COMPLETE (For details refer to Plate T-498)	8133-401
	68	MACHINE SCREW, NO.6-40 x 1/2" Fil.Hd.Br. (N.P.) for attaching 2 Position Pen Magnet to Magnet Support (Not shown)	
	69	PEN COMPLETE for 2 Position Graph (For details refer to Plate T-498) (Not shown)	12681-3

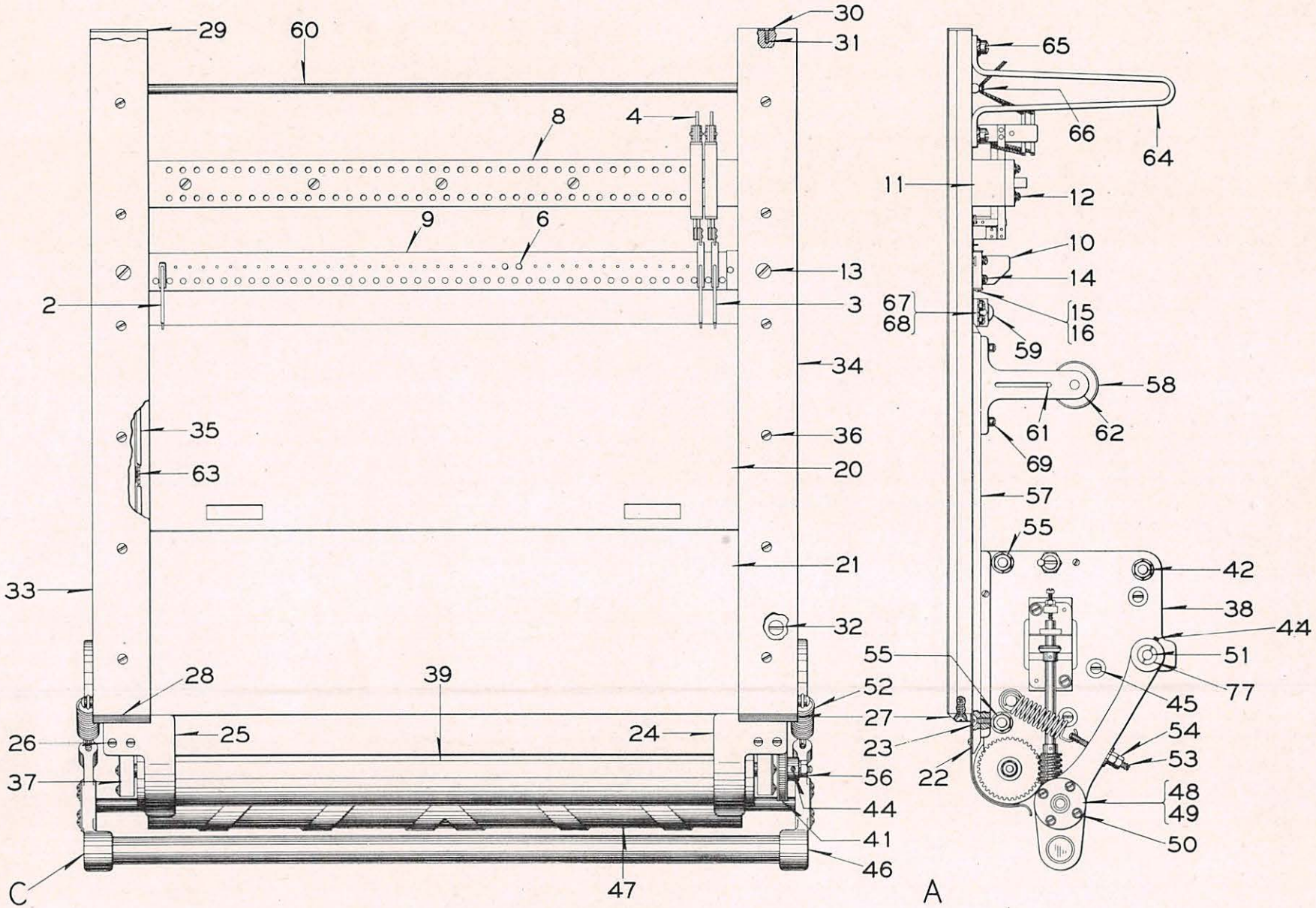

PLATE T-453

7-15-47

AUTOMATIC TRAIN GRAPH

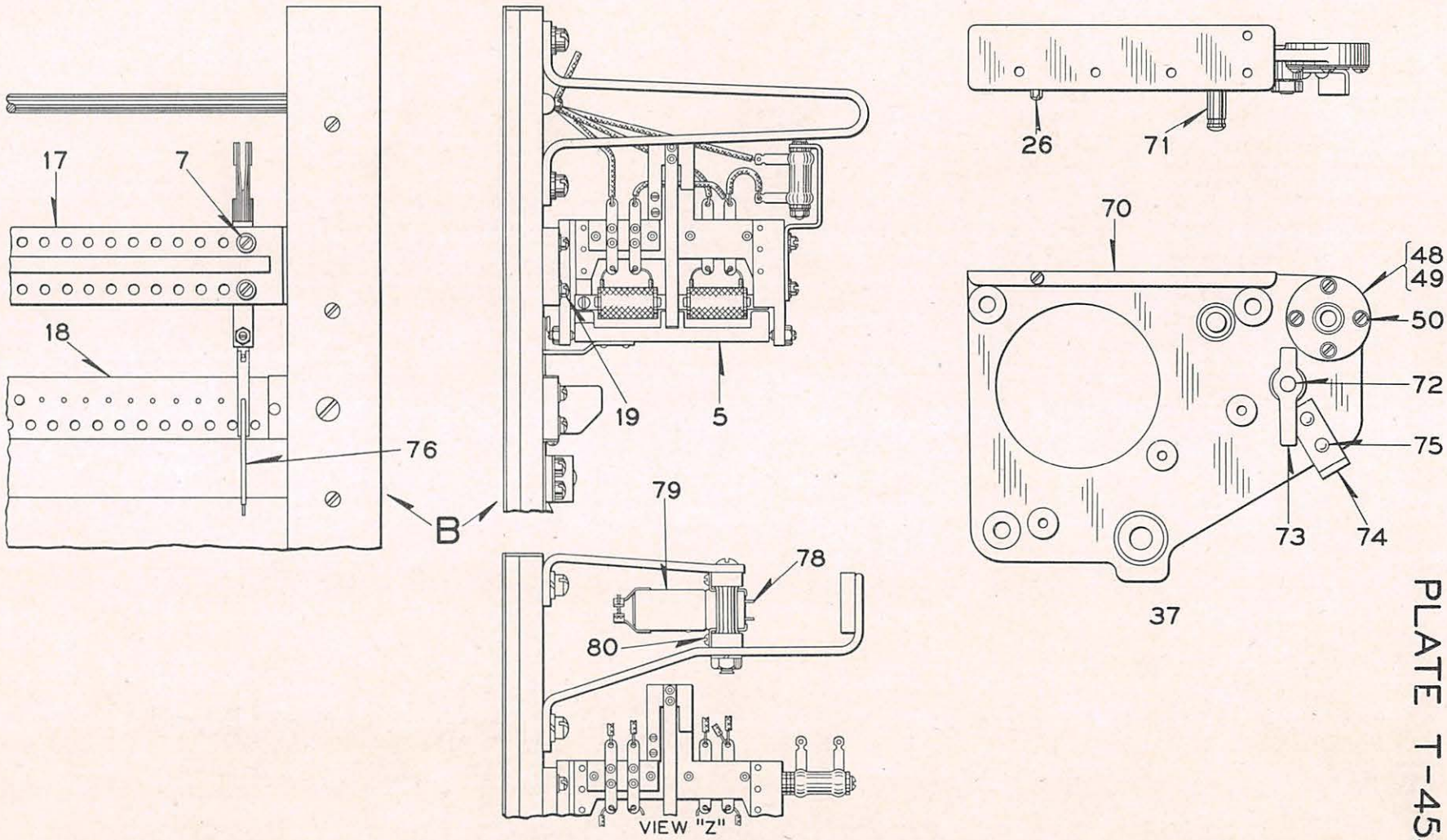

7-15-47

AUTOMATIC TRAIN GRAPH

PLATE T-453

UNION SWITCH & SIGNAL CO.

40 and 57 PEN TRAIN GRAPHS (2 and 3 POSITION) - TELECHRON DRIVE

3" MOVEMENT OF PAPER PER HOUR

Latest design of Graph without Take Up Roll and having Pressure Roll drive.

Order by Plate, Piece, Reference and Abbreviated Description Given in Heavy Face Type Only

PIECE	REF.	DESCRIPTION	DWG. REF.
	A	40-PEN TRAIN GRAPH COMPLETE with 2 Position Pen Magnets.....	C-9385-6
	Aa	57-PEN TRAIN GRAPH COMPLETE with 2 Position Pen Magnets.....	C-9385-8
	Ab	40-PEN TRAIN GRAPH COMPLETE with 2 Position Pen Magnets (arranged for Plug Couplers per View "Z").....	C-9365-6
	Ac	57-PEN TRAIN GRAPH COMPLETE with 2 Position Pen Magnets (arranged for Plug Couplers per View "Z").....	C-9365-8
	B	40-PEN TRAIN GRAPH COMPLETE with 3 Position Pen Magnets.....	C-9365-7
	Ba	57-PEN TRAIN GRAPH COMPLETE with 3 Position Pen Magnets.....	C-9365-9
	Bb	40-PEN TRAIN GRAPH COMPLETE with 3 Position Pen Magnets (arranged for Plug Couplers per View "Z").....	C-9365-7
	Bc	57-PEN TRAIN GRAPH COMPLETE with 3 Position Pen Magnets (arranged for Plug Couplers per View "Z").....	C-9365-9
258538	C	PAPER DRIVE MECHANISM COMPLETE for 40 Pen Graph (Includes Refs.37 to 56b inclusive and Ref.77).....	D-2441-9
258539	Ca	PAPER DRIVE MECHANISM COMPLETE for 57 Pen Graph (Includes Refs.37 to 56b inclusive and Ref.77).....	D-2441-9
168082	2	PILOT PEN.....	12681-2
168084	3	PEN COMPLETE for 2 Position Graph (For details refer to Plate T-498).	12681-3
174205	4	2-POSITION PEN MAGNET COMPLETE (For 16-Volt Operation) For details refer to Plate T-498.....	8133-401
168068	4a	2-POSITION PEN MAGNET COMPLETE (For 24-Volt Operation) For details refer to Plate T-498.....	8133-401
236746	5	3-POSITION PEN MAGNET COMPLETE (For 16-Volt Operation) For details refer to Plate T-498.....	8133-580
236872	5a	3-POSITION PEN MAGNET COMPLETE (For 24-Volt Operation) For details refer to Plate T-498.....	8133-580
168133	6	BUTTON. Used in blank spaces of Pen Holder.....	8097-1038
	7	MACHINE SCREW, NO.6-40 x 3/8" Fil.Hd.Br. (N.P.) with No.6 S.Lock Washer (Tin Pl.) for attaching Magnets to Magnet Support	

UNION SWITCH & SIGNAL CO.

PIECE	REF.	DESCRIPTION	DWG. REF.
257244	8	MAGNET SUPPORT COMPLETE for 40-Pen Graph with 2-Position Magnets	C-9348-4
257246	8a	MAGNET SUPPORT COMPLETE for 57-Pen Graph with 2-Position Magnets	C-9348-40
168143	9	PEN HOLDER COMPLETE for 40-Pen Graph with 2-Position Magnets	C-9348-4
223030	9a	PEN HOLDER COMPLETE for 57-Pen Graph with 2-Position Magnets	C-9348-40
168141	10	INK WELL COMPLETE for 40-Pen Graph	C-9348-4
208748	10a	INK WELL COMPLETE for 57-Pen Graph	C-9348-4
168054	11	SPACER BLOCK	9999-792
	12	MACHINE SCREW, NO.6-40 x 1-1/2" Fil.Hd.Br. (N.P.) with No.6 S.Lock Washer (Tin Pl.)	
	13	MACHINE SCREW, NO.10-32 x 1" Flat Hd.Br. (N.P.)	
	14	MACHINE SCREW, NO.6-40 x 1/2" Fil.Hd.Br. (N.P.) with No.6 S.Lock Washer (Tin Pl.)	
103464	15	PAPER CLIP for 57-Pen Graph only	C-9348-35
	16	MACHINE SCREW, NO.2-64 x 3/16" Rd.Hd.Br. (N.P.) for attaching Paper Clip Ref.15 to Pen Holder	
257247	17	MAGNET SUPPORT COMPLETE for 40-Pen Graph with 3-Position Magnets	C-9348-42
257248	17a	MAGNET SUPPORT COMPLETE for 57-Pen Graph with 3-Position Magnets	C-9348-43
239371	18	PEN HOLDER COMPLETE for 40-Pen Graph with 3-Position Magnets	C-9348-42
248253	18a	PEN HOLDER COMPLETE for 57-Pen Graph with 3-Position Magnets	C-9348-43
	19	MACHINE SCREW, NO.6-40 x 5/8" Fil.Hd.Br. (N.P.) with No.6 S.Lock Washer (Tin Pl.)	
258544	20	BACK PLATE GLASS for 40-Pen Graph	C-9348-55
258545	20a	BACK PLATE GLASS for 57-Pen Graph	C-9348-55
258548	21	FRONT PLATE GLASS COMPLETE for 40-Pen Graph	C-9348-55
258549	21a	FRONT PLATE GLASS COMPLETE for 57-Pen Graph	C-9348-55
168055	22	SHIM	11893-546
	23	MACHINE SCREW, NO.10-32 x 1/2" Flat Hd.Br. (N.P.)	
258555	24	R.H. PAPER CLIP	C-9348-56
258556	25	L.H. PAPER CLIP	C-9348-56
	26	MACHINE SCREW, NO.6-40 x 1/4" Rd.Hd.Br. (N.P.)	
168088	27	R.H. GLASS STOP	12538-96

UNION SWITCH & SIGNAL CO.

PIECE	REF.	DESCRIPTION	DWG. REF.
168089	28	L.H. GLASS STOP	12538-96
168086	29	GLASS STOP	11893-552
168087	30	GLASS STOP	11893-552
	31	MACHINE SCREW, NO.4-48 x 3/8" Flat Hd.Br. (N.P.)	
	32	MACHINE SCREW, NO.10-32 x 1-1/8" Flat Hd.Br. (N.P.)	
258552	33	L.H. CLAMPING STRIP	C-9348-56
258553	34	R.H. CLAMPING STRIP	C-9348-56
258551	35	GLASS SLIDE COMPLETE	C-9348-56
	36	MACHINE SCREW, NO.6-40 x 3/8" Flat Hd.Br. (N.P.)	
258523	37	LATCH BRACKET COMPLETE	C-9348-50
258513	38	DRIVE BRACKET COMPLETE for details refer to Plate T-479	C-9348-49
258531	39	DRIVE ROLL COMPLETE for 40-Pen Graph	C-9348-52
258532	39a	DRIVE ROLL COMPLETE for 57-Pen Graph	C-9348-52
258528	40	COLLAR. Used between Ball Bearing and Worm Gear Ref.41 (Not shown).	8350-856
258529	41	WORM GEAR	8424-308
258526	42	CROSS ROD for 40-Pen Graph	C-9348-51
258527	42a	CROSS ROD for 57-Pen Graph	C-9348-51
258524	43	CHUTE TOP PLATE for 40-Pen Graph (Not shown)	C-9348-51
258525	43a	CHUTE TOP PLATE for 57-Pen Graph (Not shown)	C-9348-51
	44	SET SCREW, NO.8-36 x 1/4" Knurled Cup Point	
	45	MACHINE SCREW, NO.6-40 x 1/2" Rd.Hd.Br. (N.P.) with Nut Ref.45a and No.6 Pl.S.Lock Washer (M) (Tin Pl.)	
1505	45a	NUT	8109-11
258503	46	PRESSURE ROLL FRAME COMPLETE for 40-Pen Graph	C-9348-47
258504	46a	PRESSURE ROLL FRAME COMPLETE for 57-Pen Graph	C-9348-47
258505	47	PRESSURE ROLL COMPLETE for 40-Pen Graph	C-9348-47
258506	47a	PRESSURE ROLL COMPLETE for 57-Pen Graph	C-9348-47
258512	48	BEARING PLATE	7828-432
C.N.66214	49	BALL BEARING	
	50	MACHINE SCREW, NO.4-48 x 3/8" Rd.Hd.Br. (N.P.) with No.4 Pl.S.Lock Washer (M) (Tin Pl.)	
	51	PIVOT Ref.51a with 3/8" Std.Shake Proof S.Lock Washer (Cad.Pl.)	

UNION SWITCH & SIGNAL CO.

PIECE	REF.	DESCRIPTION	DWG. REF.
258520	51a	PIVOT	8378-386
258537	52	SPRING	7770-621
	53	SPRING ADJUSTING SCREW Ref.53a with two Nuts Ref.54	8098-1484
258516	53a	SPRING ADJUSTING SCREW ONLY	8098-1484
58050	54	NUT	8109-298
93420	55	NUT	8265-128
	56	HEX.NUT, NO.10-32 (Tin Pl.)	
	56a	LOCK WASHER, NO.10 Pl.S. (M) (Tin Pl.)	
137875	56b	WASHER	7828-184
258542	57	BED PLATE for 40-Pen Graph	C-9348-54
258543	57a	BED PLATE for 57-Pen Graph	C-9348-54
258560	58	PAPER SUPPLY ROLL COMPLETE for 40-Pen Graph	C-9348-58
258561	58a	PAPER SUPPLY ROLL COMPLETE for 57-Pen Graph	C-9348-58
170211	59	PAPER ROLLER for 40-Pen Graph	12501-67
208823	59a	PAPER ROLLER for 57-Pen Graph	12501-67
170212	60	CABLE SUPPORT for 40-Pen Graph	12501-68
208824	60a	CABLE SUPPORT for 57-Pen Graph	12501-68
258564	61	DRAG ROD for 40-Pen Graph	C-9348-58
258565	61a	DRAG ROD for 57-Pen Graph	C-9348-58
257003	62	R.H. SUPPLY ROLL SUPPORT	C-9348-46
258502	62a	L.H. SUPPLY ROLL SUPPORT	C-9348-46
258557	63	FRICTION CATCH	12748-58
242968	64	GRAPH SUPPORT	10914-1596
	65	MACHINE SCREW, NO.14-24 x 1/2" Fil.Hd.S. (Tin Pl.) with 1/4" Pl.S. Lock Washer (M) (Tin Pl.)	
	66	MACHINE SCREW, NO.6-40 x 1/2" Fil.Hd.Br. (N.P.)	
168114	67	ROLLER SUPPORT	10914-280
	68	MACHINE SCREW, NO.10-32 x 1/2" Fil.Hd.Br. (N.P.) with No.10 Pl.S. Lock Washer (M) (Tin Pl.)	
	69	MACHINE SCREW, NO.10-32 x 7/8" Fil.Hd.Br. (N.P.) with No.10 Pl.S. Lock Washer (M) (Tin Pl.)	
255561	70	L.H. END SUPPORT	C-9348-45

UNION SWITCH & SIGNAL CO.

PIECE	REF.	DESCRIPTION	DWG. REF.
	71	SPRING SUPPORT PIN Ref.71a with Nut Ref.71b and 1/4" Pl.S.Lock Washer (Ex.H.) (Tin Pl.)	8114-1075
258517	71a	SPRING SUPPORT PIN ONLY	8114-1075
127260	71b	NUT	8109-194
258519	72	LATCH PIVOT	8378-385
258518	73	LATCH	8236-53
258521	74	STOP	10914-1854
54937	75	RIVET	10301-50
	76	PEN COMPLETE for 3 Position Graph (For details refer to Plate T-498)	12681-3
263324	77	ADJUSTING BUSHING	8350-1042
	78	10-WAY PLUG (P-310-AB)	
	78a	6-WAY PLUG (P-306-AB)	
	79	10-WAY SOCKET (S-310-CCT)	
	79a	6-WAY SOCKET (S-306-CCT)	
	80	MACHINE SCREW, NO.6-40 x 1/4" Rd.Hd.S. (Tin Pl.) with No.6 Pl.S.Lock Washer (Tin Pl.) for attaching Plugs to Plug Connector Bars	

7-15-47

PLATE T-478

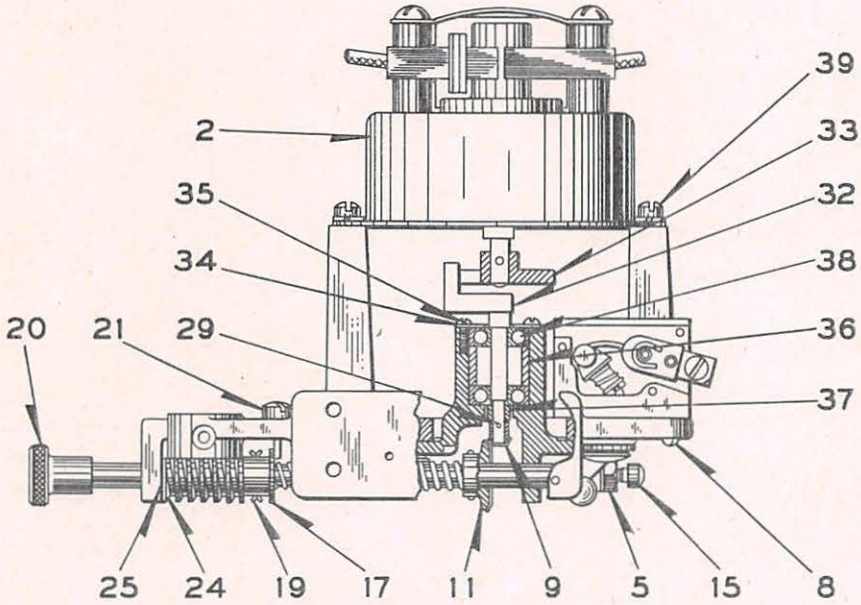

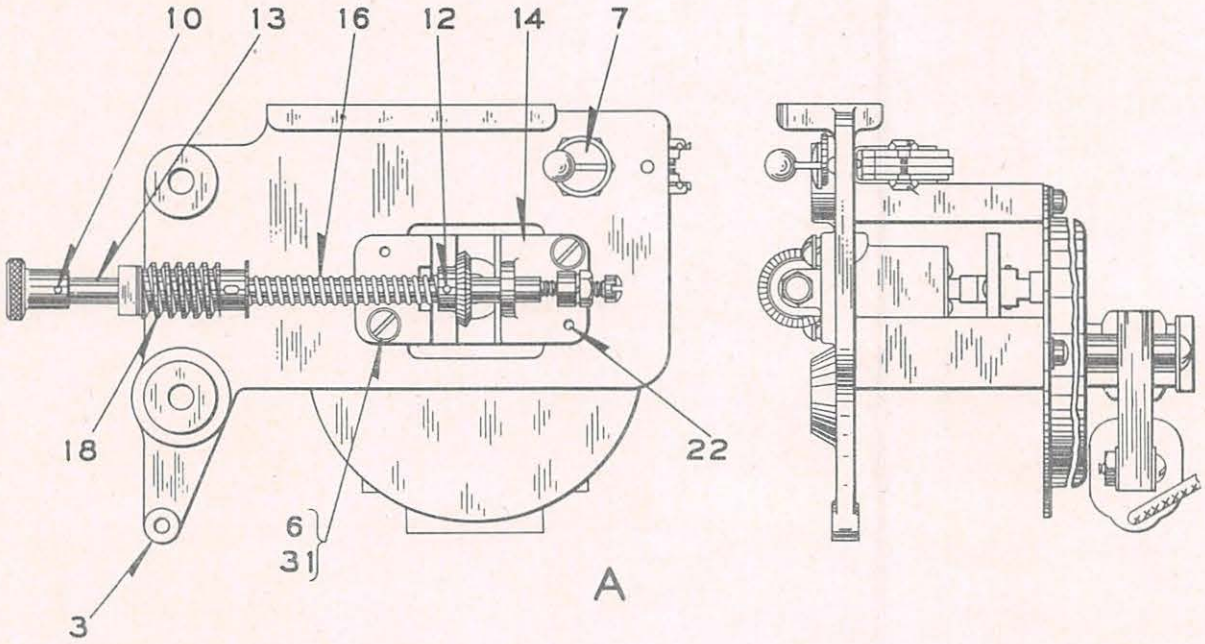

DRIVING MECHANISM

7-15-47
1-18-43

UNION SWITCH & SIGNAL CO.

DRIVING MECHANISM FOR TRAIN GRAPH

ORDER BY PLATE, PIECE, REFERENCE AND ABBREVIATED DESCRIPTION GIVEN IN HEAVY FACE TYPE STATING INSTALLATION FOR WHICH REQUIRED.

PIECE	REF.	DESCRIPTION	DWG. REF.
221456	A	DRIVING MECHANISM FOR TRAIN GRAPH (With 110/120-Volts, 50-Cycle Motor Ref.2)	C-9348-33
102561	Aa	DRIVING MECHANISM FOR TRAIN GRAPH (With 110-Volts, 60-Cycle Motor Ref.2a)	C-9348-33
221455	2	MOTOR, 110/120-Volts, 50-Cycles	C-9348-34
102577	2a	MOTOR, 110-Volts, 60-Cycles	C-9348-34
102560	3	R.H. FRONT END SUPPORT	C-9348-33
	4	MACHINE SCREW, NO.8-36 x 1-1/2" Rd.Hd.S. (Tin Pl.) with No.8 Pl.S. Lock Washer (M) (Tin Plated), Nut Ref. 5 and Washer Ref. 6 for attaching Motor to R.H. Front End Support. Used previous to 11-25-41 (Not shown)	
94344	5	NUT	8265-70
102169	6	WASHER	7828-401
	7	TOGGLE SWITCH COMPLETE	
	8	MACHINE SCREW, NO.4-36 x 5/16" Rd.Hd.Br. (Tin Pl.)	
102566	9	PINION GEAR	8424-293
45693	10	PIN	8097-473
102570	11	BEVEL GEAR	8424-294
36805	12	PIN	8097-279
102563	13	SHAFT	12501-125
220504	14	GEAR MOUNTING BRACKET	C-9348-22
	15	MACHINE SCREW, NO.8-36 x 5/8" Fil.Hd.S. (Tin Pl.) with No.8 Pl.S. Lock Washer (M) (Tin Pl.) and Nut Ref.5	
208884	16	SPRING	7770-497
183037	17	WASHER	7826-272
102398	18	WORM	8424-291
216008	19	PIN	8097-852

UNION SWITCH & SIGNAL CO.

PIECE	REF.	DESCRIPTION	DWG. REF.
183174	20	KNOB	8235-163
183036	21	SCREW	8378-361
37950	22	PIN	8097-279
25949	23	PIN (Used previous to 11-25-41) (Not shown)	8097-168
219962	24	WASHER (Steel)	7826-300
219961	25	WASHER (Fibre)	8078-549
221026	26	COUPLING PIECE (Motor End) (Used previous to 11-25-41) (Not shown)	12748-27
221027	27	COUPLING PIECE (Gear End) (Used previous to 11-25-41) (Not shown)	12748-27
221007	28	WASHER (Used previous to 11-25-41) (Not shown)	8078-379
39886	29	PIN	8097-362
220892	30	GUIDE BUSHING (Used previous to 11-25-41) (Not shown)	8350-964
	31	MACHINE SCREW, NO.8-36 x 7/16" Rd.Hd.Br. (Tin Pl.) with Washer Ref.6 and No.8 Pl.S.Lock Washer (M) (Tin Pl.)	
229455	32	GEAR SHAFT	12748-33
229452	33	MOTOR DRIVE PLATE	8072-913
229453	34	BEARING RETAINER	8350-978
	35	MACHINE SCREW, NO.2-64 x 3/16" Rd.Hd.S. (Tin Pl.)	
229486	36	SEPARATOR	8350-660
229454	37	COLLAR	8350-979
	38	BALL BEARING (C.N.66114)	
	39	SCREW, Ref.39a, with No.8 Pl.S.Lock Washer (M) (Tin Pl.)	12471-
118030	39a	SCREW ONLY, for Ref.39	8098-1286

PLATE T-479

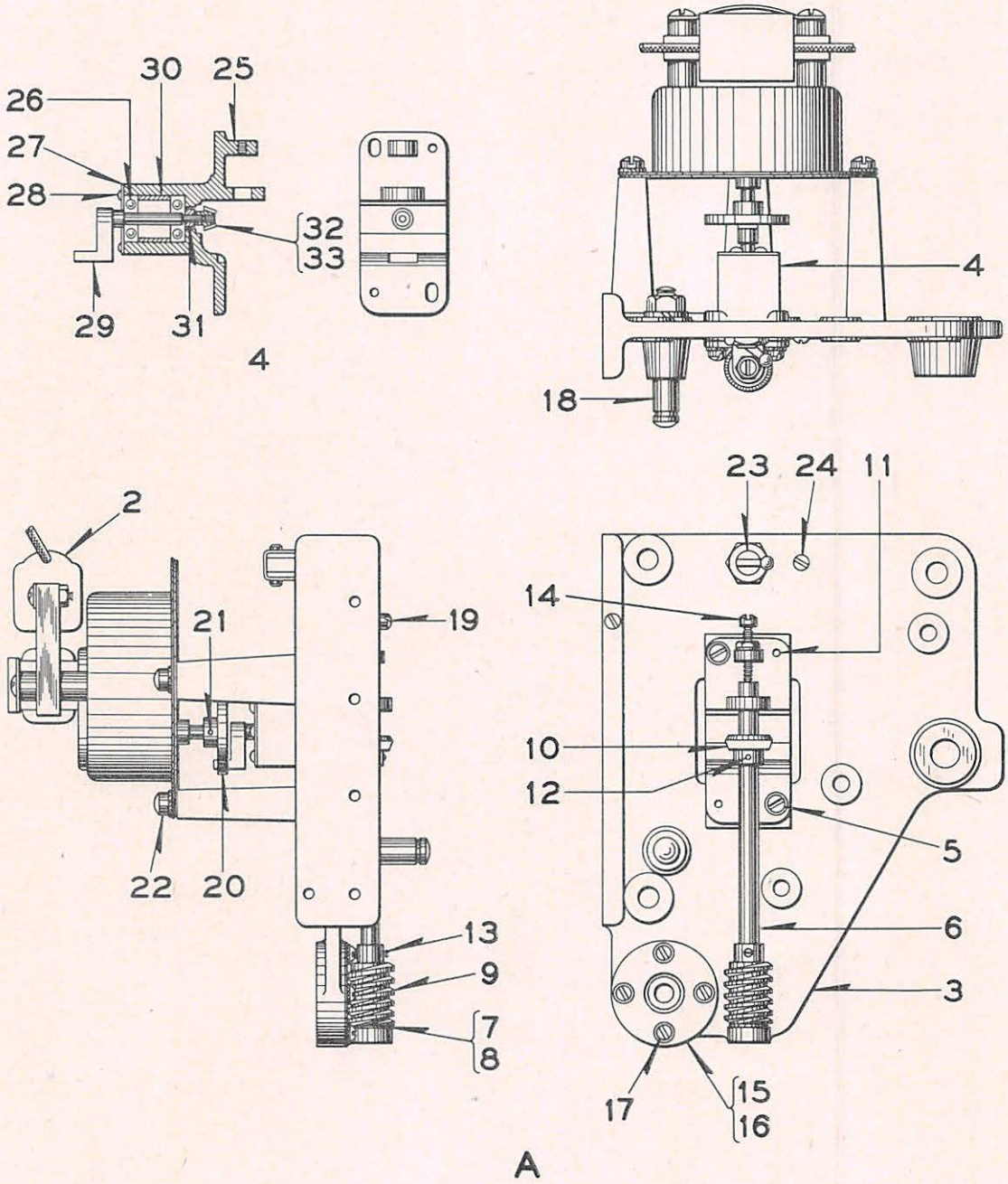

7-15-47

DRIVING MECHANISM

UNION SWITCH & SIGNAL CO.

DRIVING MECHANISM FOR TRAIN GRAPH

ORDER BY PLATE, PIECE, REFERENCE AND ABBREVIATED DESCRIPTION
GIVEN IN HEAVY FACE TYPE STATING INSTALLATION FOR WHICH REQUIRED.

PIECE	REF.	DESCRIPTION	DWG. REF.
258513	A	DRIVING MECHANISM FOR TRAIN GRAPH (With 110-Volts, 60-Cycles, 6 W. Motor Ref.2)	C-9348-49
102577	2	MOTOR COMPLETE, 110-Volts, 60-Cycles, 6-W	C-9348-34
255560	3	R.H. END SUPPORT	C-9348-45
258514	4	GEAR BRACKET COMPLETE	C-9348-49
	5	MACHINE SCREW, NO.8-36 x 7/16 inch Rd.Hd.Br. (N.P.) with Washer Ref.5a and No.8 Pl.S.Lock Washer (M) (Tin Pl.)	
102169	5a	WASHER	7828-401
258522	6	SHAFT	12501-186
219961	7	FIBRE WASHER	8078-549
219962	8	WASHER	7826-300
102398	9	WORM GEAR	8424-291
102570	10	BEVEL GEAR	8424-294
37950	11	PIN	8097-279
36805	12	PIN	8097-279
216008	13	PIN	8097-852
	14	MACHINE SCREW, NO.8-36 x 5/8" Fil.Hd.S. (Tin Pl.) with No.8 Pl.S. Lock Washer (M) (Tin Pl.) and Nut Ref.14a	
94344	14a	NUT	8265-70
C.N.66214	15	BALL BEARING	
258512	16	BEARING PLATE	7828-432
	17	MACHINE SCREW, NO.4-48 x 3/8" Rd.Hd.Br. (N.P.) with No.4 Pl.S.Lock Washer (M) (Tin Pl.)	
	18	SPRING SUPPORT PIN Ref.18a with 1/4" Pl.S.Lock Washer (Ex.H.) (Tin Pl.) and Nut Ref.18b	8114-1075
258517	18a	SPRING SUPPORT PIN ONLY	8114-1075
127260	18b	NUT	8109-194

UNION SWITCH & SIGNAL CO.

PIECE	REF.	DESCRIPTION	DWG. REF.
	19	MACHINE SCREW, NO.6-40 x 1/4" Fil.Hd.Br. (N.P.)	
229452	20	MOTOR DRIVE PLATE	8072-913
45693	21	PIN	8097-473
	22	SCREW Ref.22a with No.8 Pl.S.Lock Washer (M) (Tin Pl.)	8098-1286
118030	22a	SCREW ONLY	8098-1286
C.N.72739	23	TOGGLE SWITCH COMPLETE	
	24	MACHINE SCREW, NO.4-36 x 5/16" Rd.Hd.Br. (N.P.)	
220504	25	BRACKET	C-9348-22
C.N.66114	26	BALL BEARING	
229453	27	BEARING RETAINER	8350-978
	28	MACHINE SCREW, NO.2-64 x 3/16" Rd.Hd.S. (Tin Pl.)	
229455	29	GEAR SHAFT	12748-33
229486	30	SEPARATOR	8350-660
229454	31	COLLAR	8350-979
102566	32	PINION GEAR	8424-293
39886	33	PIN	8097-362

PLATE T-498

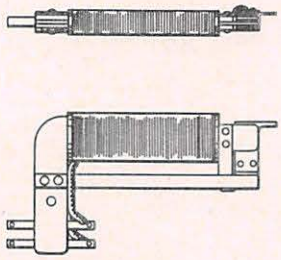

16

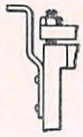

VIEW "Z"

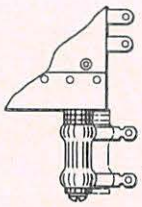

VIEW "Y"

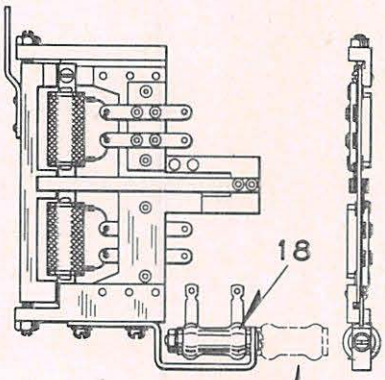

17

ALTERNATE RESISTORS BY MOUNTING AS SHOWN IN FULL LINES IN ODD SPACES, AND DOT AND DASH IN EVEN SPACES.

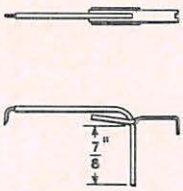

19

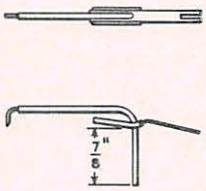

20

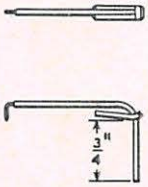

21

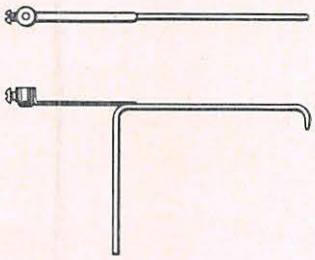

22

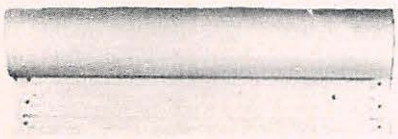

23

24

25

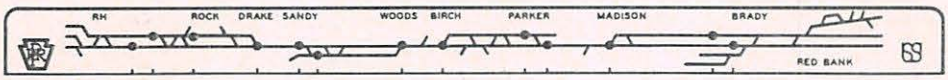

26

7-15-47

TRAIN GRAPH DETAILS

UNION SWITCH & SIGNAL CO.

TRAIN GRAPH DETAILS

ORDER BY PLATE, PIECE, REFERENCE AND ABBREVIATED DESCRIPTION STATING INSTALLATION FOR WHICH REQUIRED.

PIECE	REF.	DESCRIPTION	DWG. REF.
174205	16	2-POSITION PEN MAGNET COMPLETE, flat coil type, for 16-volt operation. Used with pen Ref.19	8133-401
168068	16a	2-POSITION PEN MAGNET COMPLETE, flat coil type, for 24-volt operation. Used with pen Ref.19	8133-401
236746	‡17	3-POSITION PEN MAGNET COMPLETE, with straight operating arm as shown. For 16-volt operation	8133-580
236872	‡17a	3-POSITION PEN MAGNET COMPLETE, with straight operating arm as shown. For 24-volt operation	8133-580
		‡ Latest design of 3-position pen magnet, for use with pen reference 20. Graphs equipped with this style of pen magnet can have pens bent to obtain unequal spacing of graph lines.	
268014	*17b	3-POSITION PEN MAGNET COMPLETE, with bent operating arm per View "Z". For 16-volt operation	8133-580
268015	*17c	3-POSITION PEN MAGNET COMPLETE, with bent operating arm per View "Z". For 24-volt operation	8133-580
		* Original design of 3-position pen magnet, for use with pen reference 19. Graphs equipped with this style of pen magnet cannot have pens offset to obtain unequal spacing of lines due to interference of adjacent pens.	
271814	‡17d	3-POSITION PEN MAGNET COMPLETE, with straight operating arm as shown. Resistor arranged per View "Y" for plug coupled Graph. For 16-volt operation	8133-644
271815	‡17e	3-POSITION PEN MAGNET COMPLETE, with straight operating arm as shown. Resistor arranged per View "Y" for plug coupled Graph. For 24-volt operation	8133-644
		‡ Latest design of 3-position pen magnet, for use with pen reference 20. Graphs equipped with this style of pen magnet can have pens bent to obtain unequal spacing of graph lines.	
250712	18	RESISTOR, 80-Ohms, for Refs.17, 17b and 17d	9065-329
250713	18a	RESISTOR, 160-Ohms, for Refs.17a, 17c and 17e	9065-329

UNION SWITCH & SIGNAL CO.

PIECE	REF.	DESCRIPTION	DWG. REF.
168084	19	PEN COMPLETE with bent operating arm, used with, - (1) 2-Position pen magnets (Refs.16 and 16a) to scribe, - (a) equally spaced (3/8") graph lines. (b) also unequally spaced (1/4" and 1/2") graph lines by bending tubing as shown in Fig.22 and mentioned in paragraph 5I of Instruction Pamphlet U-5463. (2) 3-Position pen magnets (Refs.17b and 17c) to scribe, - (a) equally spaced graph lines only (Replacement only for graphs shipped prior to April 1946).....	12681-3
244977	20	PEN COMPLETE with straight operating arm, used with, - (1) 3-Position pen magnets (Refs.17, 17a, 17d and 17e) to scribe, - (a) equally spaced (3/8") graph lines. (b) also unequally spaced (1/4" and 1/2") graph lines when pen magnet operating arm is bent to right or left as indicated by double arrow in Fig.19 and paragraph 5H of Instruction Pamphlet U-5463.....	12681-3
168082	21	ESTERLINE GRAPHIC METAL PEN (Pilot Pen).....	12681-2
157615	22	DEEP WELL PEN (Bristol).....	12681-1
	23	CHART PAPER, 200-ft. Roll (40 Pen Graph, 3" / Hr.).....	S-084
	23a	CHART PAPER, 200-ft. Roll (40 Pen Graph, 6" / Hr.).....	S-0151
	23b	CHART PAPER, 200-ft. Roll (57 Pen Graph, 3" / Hr.).....	S-0196
	24	PEN FILLER (Esterline Angus Co.)	
	25	1/2 Pint Brown's Recording Ink (Color: Green)	
	25a	1 Pint Brown's Recording Ink (Color: Green)	
	26	GRAPH SCALES (Orders should specify installation for which required)..	C-9282-
	27	10-WAY PLUG COUPLER COMPLETE (Includes Plug and Socket) for Plug Connected Pen Magnets (Not shown)	
	27a	6-WAY PLUG COUPLER COMPLETE (Includes Plug and Socket) for Plug Connected Pen Magnets (Not shown)	

PLATE T-500

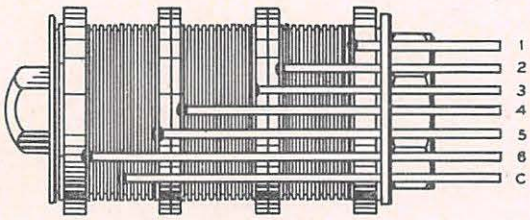

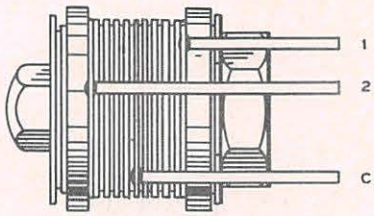

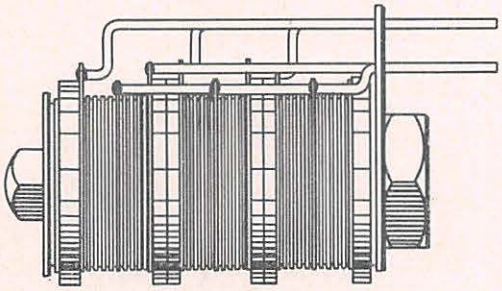

2

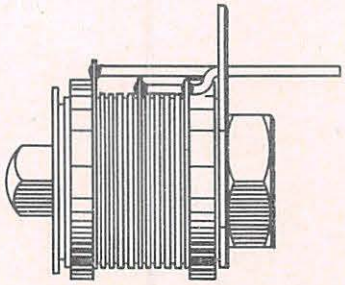

3

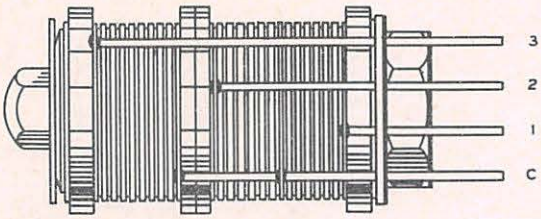

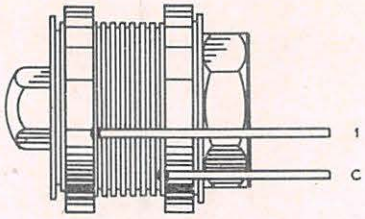

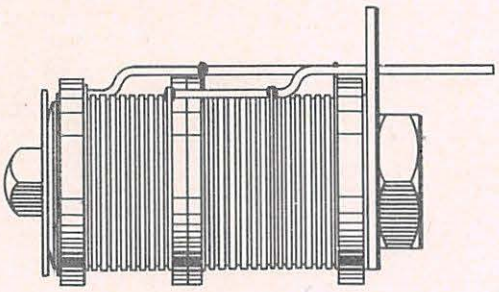

4

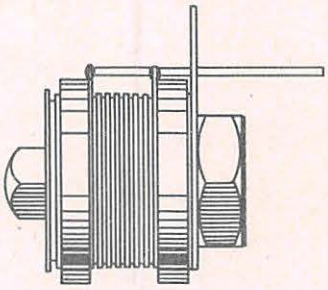

5

1-18-43

RECTIFIERS

UNION SWITCH & SIGNAL CO.

RECTIFIERS

Order by Plate, Piece, Reference and Abbreviated Description Given in Heavy Face Type Only

PIECE	REF.	DESCRIPTION	DWG. REF.
152430	2	STYLE "RS-18" RECTIFIER COMPLETE (Ref. D, Plate S-606).....	12558-13
173178	3	STYLE "RS-7" RECTIFIER COMPLETE (Ref.Ba, Plate S-606).....	12558-18
168944	4	STYLE "RS-10" RECTIFIER COMPLETE (Ref.C, Plate S-606).....	12558-15
168945	5	STYLE "RS-2" RECTIFIER COMPLETE (Ref.B, Plate S-606).....	12558-16

7-15-47

PLATE T-510

4

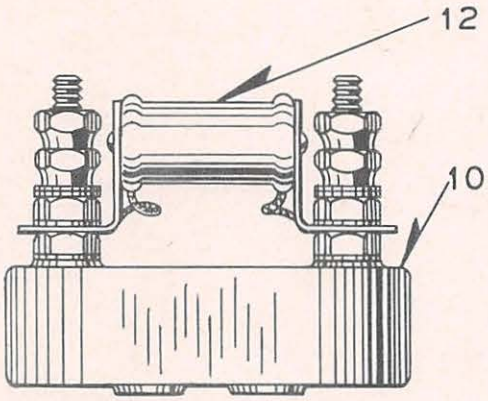

11

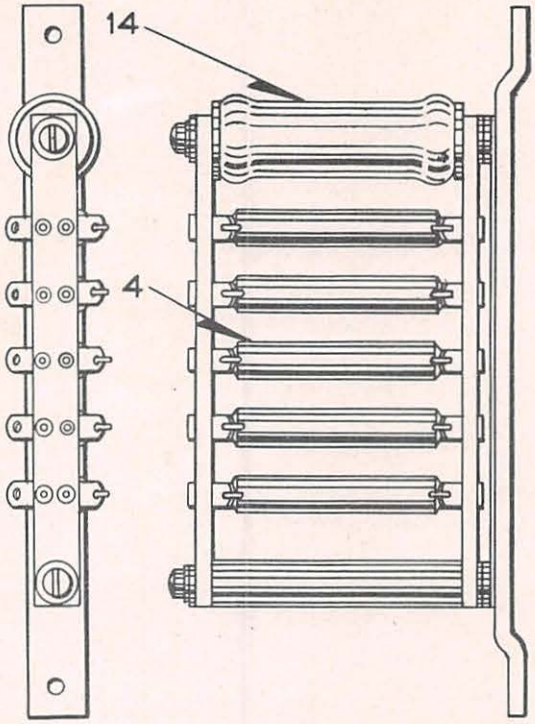

13

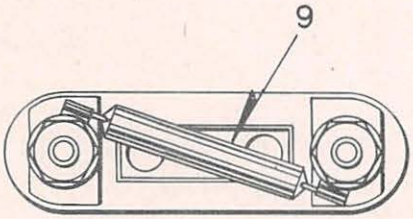

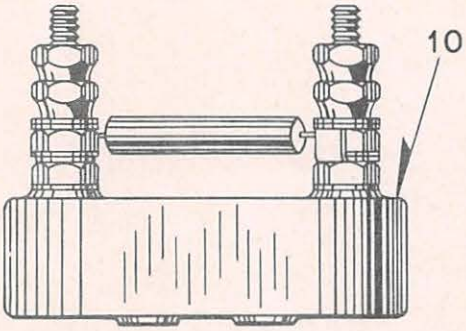

8

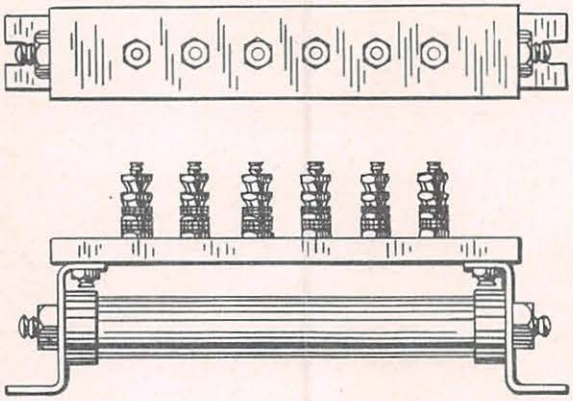

5

7-15-47

RESISTORS

UNION SWITCH & SIGNAL CO.

RESISTORS

When ordering Resistors specify resistance, wattage, unit for which required and installation.

Order by Plate, Piece, Reference and Abbreviated Description Given in Heavy Face Type Only

PIECE	REF.	DESCRIPTION	DWG. REF.
	4	RESISTOR (Soldered directly to coil connector terminals of Style "L" Relays and also used in Resistor Unit Assembly Ref.13). Orders should specify nomenclature of relay, unit in which relay is used and installation when resistor is desired for use with relay; resistance and wattage of resistor when desired for use with resistor assembly.....	9065-
	5	RESISTOR, Type 21A-26, 60-Ohms (Fig. 2 of Plate F-6509)	
	5a	RESISTOR, Type 21A-45, 600-Ohms (100, 200 and 300-Ohms) (Fig. 2 of Plate F-6509)	
	5b	RESISTOR, Type 21A-44, 1200-Ohms (200, 400 and 600-Ohms) (Fig. 2 of Plate F-6509)	
	5c	RESISTOR, Type 31A-21, 1550-Ohms (50, 100, 200, 400 and 800-Ohms) (Fig. 3 of Plate F-6509)	
	8	RESISTOR COMPLETE with Mounting Block. Orders should specify resistance and wattage of resistor and installation.....	9065-
	9	RESISTOR for use on mounting block. Orders should specify resistance, wattage and installation for which required.....	9065-
	10	MOUNTING BLOCK (Porcelain) COMPLETE with Nuts and Washers as shown.....	9968-
	10a	MOUNTING BLOCK (Bakelite) COMPLETE with Nuts and Washers as shown.....	9968-
	11	RESISTOR COMPLETE with Mounting Block. Orders should specify resistance and wattage of resistor and installation.....	9065-
	12	RESISTOR for use on mounting block. Orders should specify resistance, wattage and installation for which required.....	9065-
	13	RESISTOR UNIT ASSEMBLY COMPLETE. Orders should specify unit in which resistor assembly is used and installation.....	9065-
	14	RESISTOR for use on Resistor Unit Assembly. Orders should specify resistance, wattage and installation for which required.....	9065-

PLATE T-520

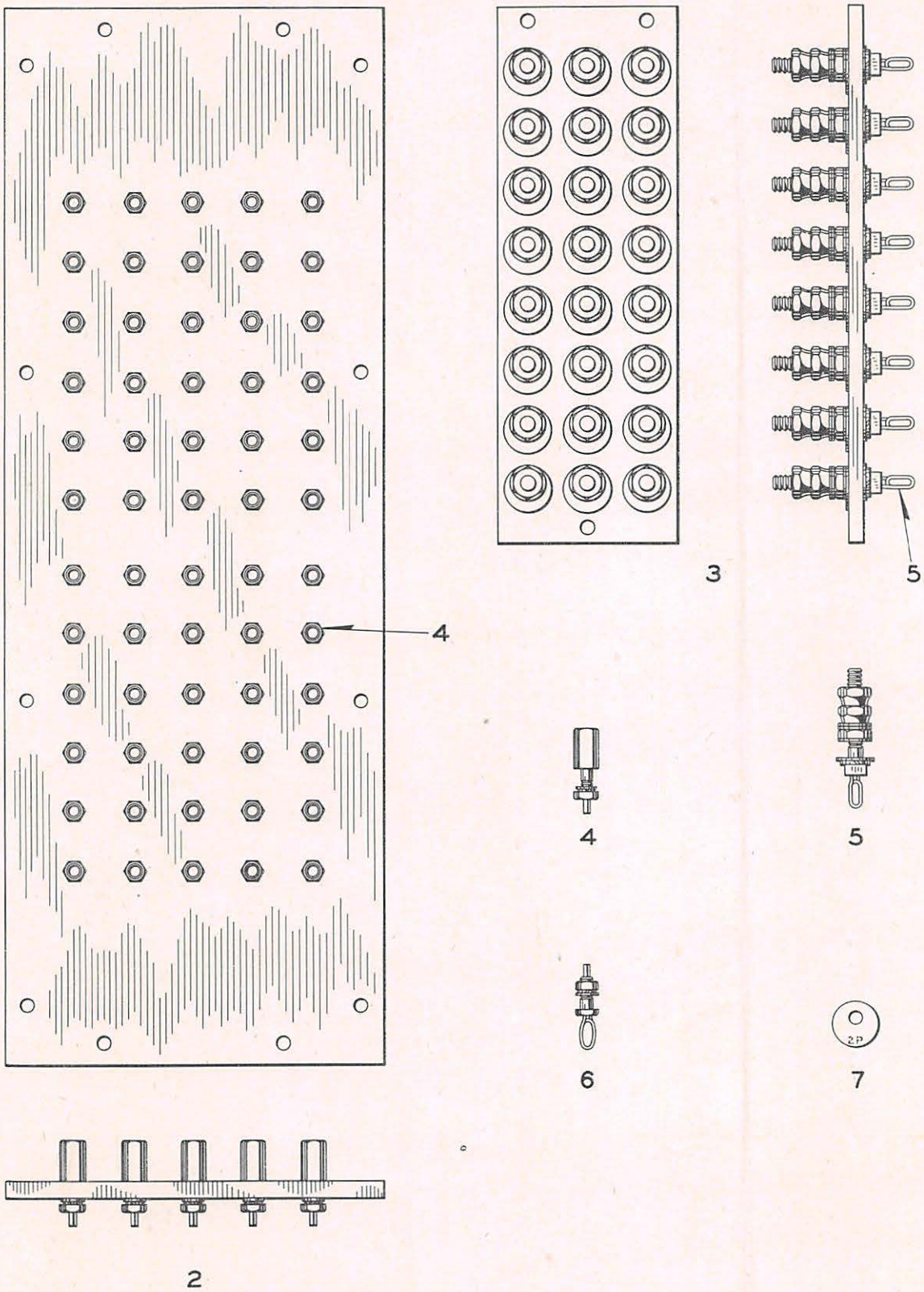

PLUG CONNECTORS AND TERMINAL BOARDS

1-18-43

UNION SWITCH & SIGNAL CO.

TERMINAL BOARDS AND PLUG CONNECTORS

Order by Plate, Piece, Reference and Abbreviated Description Given in Heavy Face Type Only

PIECE	REF.	DESCRIPTION	DWG. REF.
	2	**TERMINAL BOARD COMPLETE** with Sockets. Orders should specify Unit with which used and installation	C-9232-
	3	PLUG CONNECTOR COMPLETE. Orders should specify Unit with which used and installation.	
248560	4	SOCKET with Nut, Washer and Lock Washer (Inc.1-4a, 1-8, 1-9 and 1-10)	12451-377
153972	4a	SOCKET ONLY	8094-2220
209044	5	CONTACT SPRING AND TERMINAL POST with Nuts, Washers and Lock Washer (Inc.1-5a, 2-11, 1-12, 2-13, 2-14 and 1-15)	12451-324
154506	5a	CONTACT SPRING AND TERMINAL POST ONLY	8385-2174
209045	6	CONTACT SPRING AND TERMINAL POST with Nut, Washer and Lock Washer (Inc.1-6a, 1-8, 1-9 and 1-10)	12451-325
154591	6a	CONTACT SPRING AND TERMINAL POST ONLY	8385-2181
	7	WHITE CELLULOID TAG (Orders should specify marking desired)	8988-203
44618	8	WASHER	7828-184
	9	LOCK WASHER, NO.10 Pl.S. (M) (Tin Pl.)	
26942	10	NUT	8109-184
29101	11	NUT	8109-193
29103	12	NUT	8109-194
29102	13	WASHER	7828-139
29104	14	WASHER	7828-138
	15	LOCK WASHER, 1/4" Pl.S. (M) (Tin Pl.)	

PLATE T-525

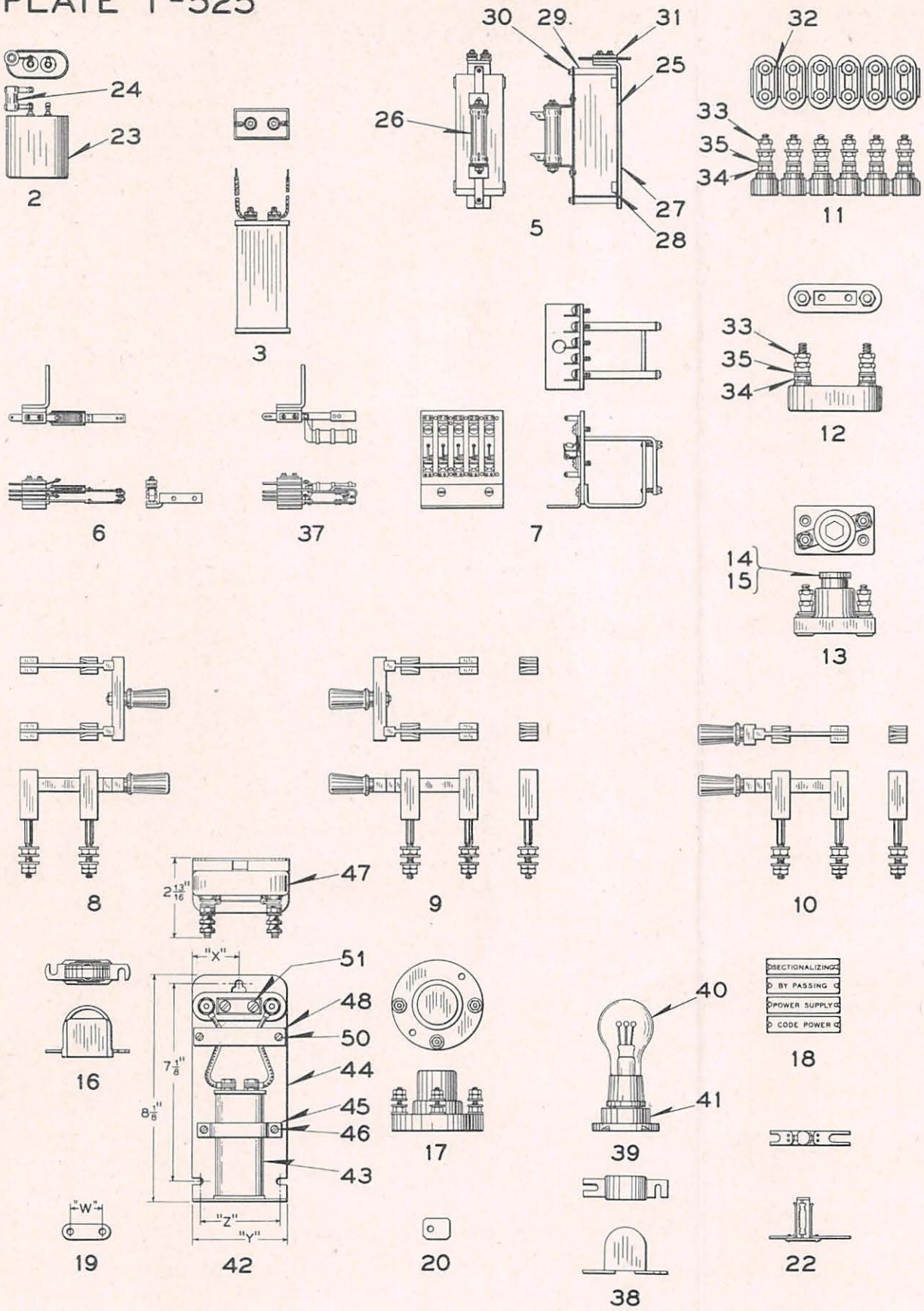

7-15-47
1-18-43

CONDENSERS, ARRESTERS, TAGS, ETC.

UNION SWITCH & SIGNAL CO.

CONDENSERS, SPARK ARRESTER UNITS, SWITCHES, TERMINAL BLOCKS, ETC.

Order by Plate, Piece, Reference and Abbreviated Description Given in Heavy Face Type Only

PIECE	REF.	DESCRIPTION	DWG. REF.
173134	2	CONDENSER (0.5 MF) COMPLETE with 5-Ohm Resistor	C-9232-3
182219	2a	CONDENSER (0.5 MF) COMPLETE with 500-Ohm Resistor	C-9232-3
254073	3	CONDENSER (0.94 MF) COMPLETE with Leads 23" long	B-12549-21
	4	CONDENSER (1000 MF, 20 Volts) Not shown	
158913	5	SPARK ARRESTER UNIT COMPLETE, with 0.94 MF Condenser, 90-Ohm Resistor and Fittings	C-9232-9
175203	6	THERMAL RELAY (Contact Normally closed)	B-12660-18
194719	7	FUSE BLOCK (5-Way) with 1-1/3 Amp. Fuses	9065-528
194720	7a	FUSE BLOCK (6-Way) with 1-1/3 Amp. Fuses	9065-259
	8	KNIFE SWITCH, TWO POLE SINGLE THROW (30-Amperes, 250-Volts D.C.)	
	9	KNIFE SWITCH, TWO POLE DOUBLE THROW (30-Amperes, 250-Volts D.C.)	
	10	KNIFE SWITCH, SINGLE POLE DOUBLE THROW (30-Amps., 250-Volts D.C.)	
	11	MULTIPLE UNIT BAKELITE TERMINAL BLOCK (6-Way) with Nuts, Washers and Connectors (Inc.1-11f, 6-32, 24-33, 12-34 and 36-35)	9968-
	11a	MULTIPLE UNIT BAKELITE TERMINAL BLOCK (5-Way) with Nuts, Washers and Connectors (Inc.1-11g, 5-32, 20-33, 10-34 and 30-35)	9968-
	11b	MULTIPLE UNIT BAKELITE TERMINAL BLOCK (4-Way) with Nuts, Washers and Connectors (Inc.1-11h, 4-32, 16-33, 8-34 and 24-35)	9968-
	11c	MULTIPLE UNIT BAKELITE TERMINAL BLOCK (3-Way) with Nuts, Washers and Connectors (Inc.1-11j, 3-32, 12-33, 6-34 and 18-35)	9968-
	11d	MULTIPLE UNIT BAKELITE TERMINAL BLOCK (2-Way) with Nuts, Washers and Connectors(Inc. 1-11k, 2-32, 8-33, 4-34 and 12-35)	9968-
	11e	MULTIPLE UNIT BAKELITE TERMINAL BLOCK (1-Way) with Nuts, Washers and Connectors (Inc.1-11m, 1-32, 4-33, 2-34 and 6-35)	9968-
178388	11f	MULTIPLE UNIT BAKELITE TERMINAL BLOCK (6-Way) without Nuts, Washers and Connectors	9968-1074

UNION SWITCH & SIGNAL CO.

PIECE	REF.	DESCRIPTION	DWG. REF.
181819	11g	MULTIPLE UNIT BAKELITE TERMINAL BLOCK (5-Way) without Nuts, Washers and Connectors	9968-1100
181829	11h	MULTIPLE UNIT BAKELITE TERMINAL BLOCK (4-Way) without Nuts, Washers and Connectors	9968-1100
181830	11j	MULTIPLE UNIT BAKELITE TERMINAL BLOCK (3-Way) without Nuts, Washers and Connectors	9968-1100
181831	11k	MULTIPLE UNIT BAKELITE TERMINAL BLOCK (2-Way) without Nuts, Washers and Connectors	9968-1100
181832	11m	MULTIPLE UNIT BAKELITE TERMINAL BLOCK (1-Way) without Nuts, Washers and Connectors	9968-1100
170501	12	BAKELITE TERMINAL BLOCK with Nuts and Washers (Inc.1-12b, 4-33, 2-34 and 6-35)	9968-1030
	12a	BAKELITE TERMINAL BLOCK with Nuts and Washers (Inc.1-12b, 2-33, 2-34, 10-35 and 4-36)	9968-
170363	12b	BAKELITE TERMINAL BLOCK without Nuts and Washers	9968-1030
121591	13	LAMP SOCKET (Without Adapter and Plug)	9954-60
	14	ADAPTER for Plug Ref.15 (C.N. 70077)	
	15	PLUG, 6.25 Amp. (C.N. 71031)	
	16	LIGHTNING ARRESTER COMPLETE (30 to 150 Volts) (C.N. 71214)	
	17	LIGHTNING ARRESTER COMPLETE (C.N. 70069)	
181068	18	NAME PLATE, Four Pieces (Lettered "Sectionalizing", "By Passing", "Power Supply", "Code Power")	8225-417
187578	18a	NAME PLATE (Lettered "Cut Out East")	8225-462
187579	18b	NAME PLATE (Lettered "Cut Out West")	8225-462
61337	19	TERMINAL CONNECTOR (Copper, No.20 B. & S. Gauge, N.P.) "W" dim. 1-1/8", 1/4" Holes	8064-396
61336	19a	TERMINAL CONNECTOR (Copper, No.20 B. & S. Gauge, N.P.) "W" dim. 1-3/8", 5/16" Holes	8064-406
208360	19b	TERMINAL CONNECTOR (Ph.Bz., No.23 B. & S. Gauge, N.P.) "W" dim. 1-3/4", 1/4" Holes	8064-396
81048	19c	TERMINAL CONNECTOR (Copper, No.20 B. & S. Gauge, N.P.) "W" dim. 1-13/16", 1/4" Holes	8064-396
137335	19d	TERMINAL CONNECTOR (Ph.Bz., No.23 B. & S. Gauge, N.P.) "W" dim. 2", 1/4" Holes	8064-396
98893	19e	TERMINAL CONNECTOR (Copper, No.10 B. & S. Gauge, N.P.) "W" dim. 2", 1/4" Holes	8064-396
132680	19f	TERMINAL CONNECTOR (Copper, No.22 B. & S. Gauge, N.P.) "W" dim. 3-21/64", 1/4" Holes	8064-396

UNION SWITCH & SIGNAL CO.

PIECE	REF.	DESCRIPTION	DWG. REF.
147969	19g	TERMINAL CONNECTOR (Copper, No.22 B. & S. Gauge, N.P.) "W" dim. 4-1/16", 1/4" Holes	8064-396
179932	20	TAG (Black Fibre, 1/16" x 3/4" x 15/16" with 17/64" Hole) (Orders should specify marking desired)	8988-8
	21	TWO WIRE CLEAT (C.N. 70500) (Not shown)	
	21a	THREE WIRE CLEAT (C.N. 70504)	
	21b	SIX WIRE CLEAT (C.N. 70506)	
	22	LIGHTNING ARRESTER COMPLETE	
168916	23	CONDENSER (0.5 MF)	B-12549-15
239254	24	RESISTOR (5-Ohms)	9065-329
239257	24a	RESISTOR (600-Ohms)	9065-329
135177	25	CONDENSER (0.94 MF)	B-12549-2
155216	26	RESISTOR (90-Ohms)	9065-200
155238	27	CONDENSER PLATE	9999-641
136811	28	CLIP	11893-291
116612	29	SLEEVE	8350-513
63803	30	SCREW	8098-1275
	31	TERMINAL CONNECTOR COMPLETE (For details refer to Plate T-310, Ref.M)	
56224	32	TERMINAL CONNECTOR	8064-348
29101	33	NUT	8109-193
127260	34	NUT	8109-194
29102	35	WASHER	7828-139
29103	36	NUT (Not shown)	8109-194
237785	37	THERMAL RELAY (Contact Normally closed)	B-12662-5
C.N.70068	38	LIGHTNING ARRESTER, Type RVS	
	39	LIGHTNING PROTECTOR TUBE KX 642 and Base (Inc.1-40 and 1-41)	
	40	LIGHTNING PROTECTOR TUBE ONLY (KX 642)	
	41	BASE FOR LIGHTNING PROTECTOR TUBE KX 642	
213646	42	CONDENSER (2.5 MFD) Mounted on Narrow Base Plate as shown ("X" = 1-11/16", "Y" = 3-3/8", "Z" = 2-7/8")	C-16862-3
212501	42a	CONDENSER (7.0 MFD) Mounted on Wide Base Plate ("X" = 2-7/16", "Y" = 4-7/8", "Z" = 4-3/8")	C-16862-4
259587	42b	CONDENSER (13.0 MFD) Mounted on Wide Base Plate ("X" = 2-7/16", "Y" = 4-7/8", "Z" = 4-3/8")	C-16862-4

UNION SWITCH & SIGNAL CO.

PIECE	REF.	DESCRIPTION	DWG. REF.
223345	43	CONDENSER COMPLETE (2.5 MFD)	B-12549-38
182458	43a	CONDENSER COMPLETE (7.0 MFD)	B-12549-22
211515	43b	CONDENSER COMPLETE (13.0 MFD)	B-12549-22
263539	44	NARROW MOUNTING PLATE	10914-1936
255795	44a	WIDE MOUNTING PLATE	10914-1815
263538	45	CONDENSER CLAMP for Ref.42	10914-668
234211	45a	CONDENSER CLAMP for Ref.42a and 42b	10914-790
	46	MACHINE SCREW, NO.8-36 x 9/16" Fil.Hd.S. (Tin Pl.) with No.8 Pl.S. Lock Washer (M) (Tin Pl.) and No.8-36 Hex.S.Nut (Tin Pl.) for attaching Ref.45 to Mounting Plate	
	46a	MACHINE SCREW, NO.10-32 x 5/8" Fil.Hd.S. (Tin Pl.) with No.10 Pl.S. Lock Washer (M) (Tin Pl.) and No.10-32 Hex.S.Nut (Tin Pl.) for attaching Ref.45a to Mounting Plate	
	47	BAKELITE TERMINAL BLOCK WITH NUTS AND WASHERS (Inc.1-12b, 4-33, 2-34, 8-35 and two 1/4" Pl.S. Lock Washers (M) (Tin Pl.)	9968-
255772	48	ESCUTCHEON PLATE	8225-820
255776	49	SPACER. Used between Escutcheon Plate and Mounting Plate (Not shown)	8350-856
	50	SCREW, NO.6 x 5/8" Type "Z" Rd.Hd.Hardened (Tin Pl.)	
	51	MACHINE SCREW, NO.14-24 x 7/8" Fil.Hd.S. (Tin Pl.) with 1/4" Pl.S. Lock Washer (M) and Nut Ref.51a	
93420	51a	NUT	8265-128

PLATE T-551

LAMP CAP COLORS:-
R-RED
G-GREEN
A-AMBER

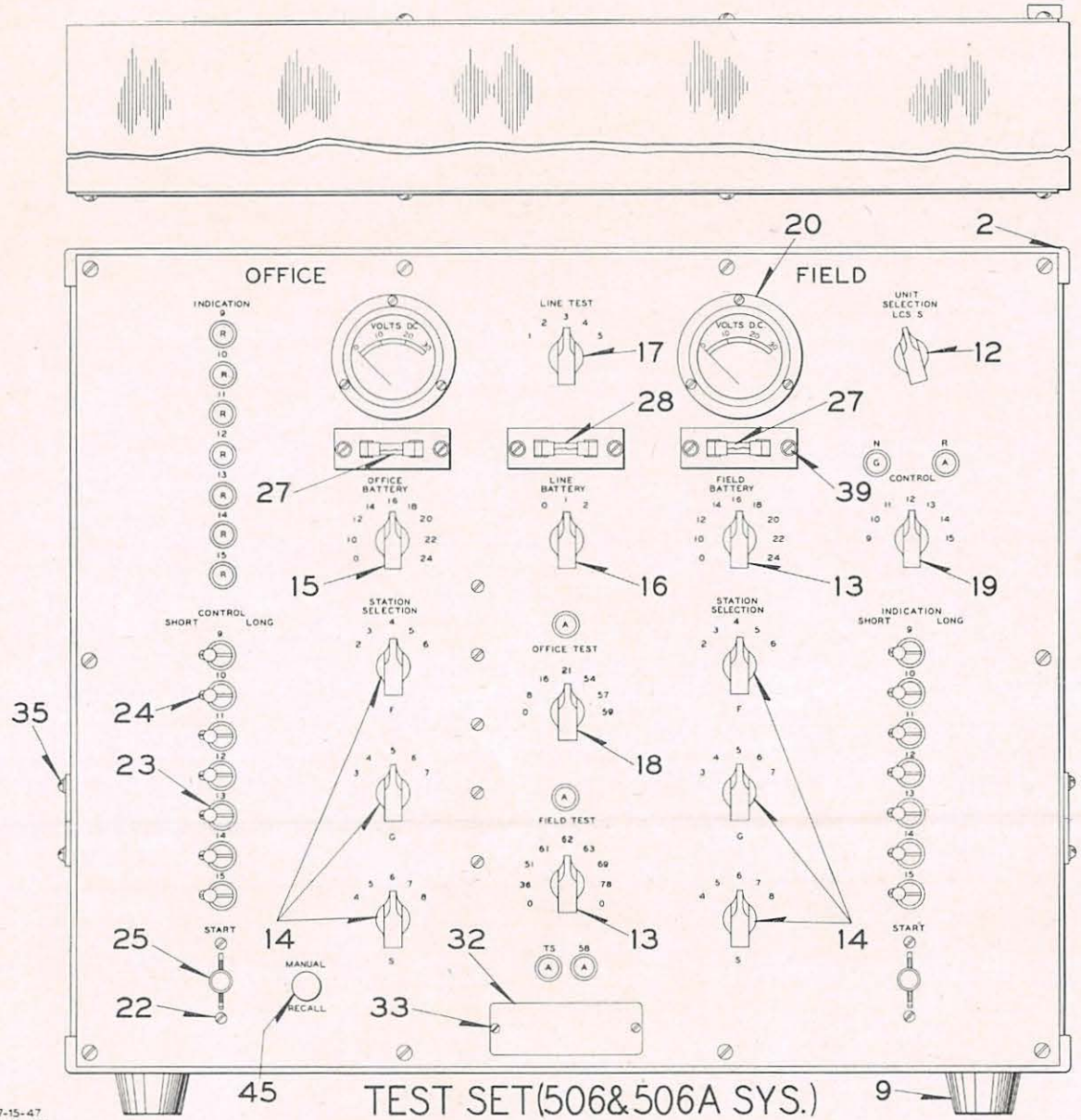

7-15-47
1-18-43

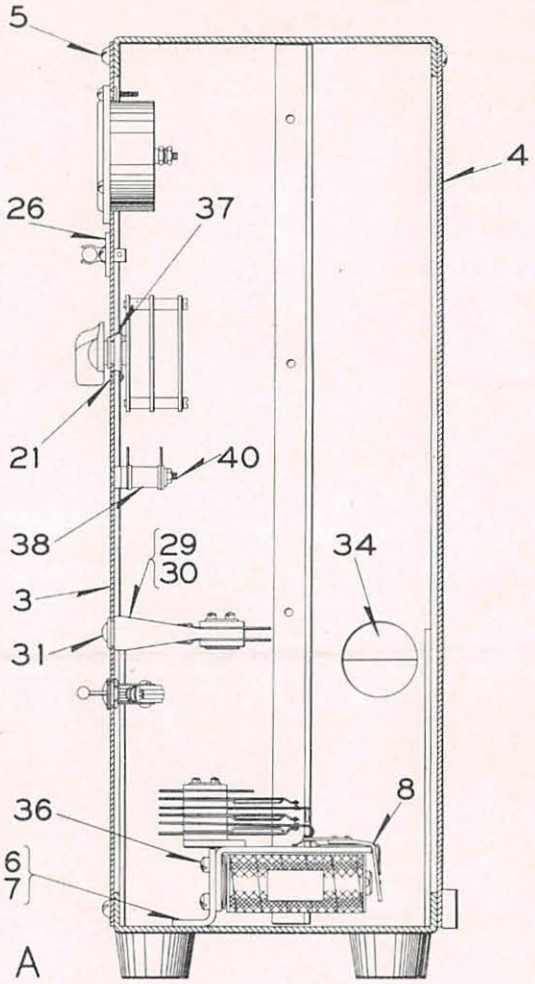

UNION SWITCH & SIGNAL CO.

OFFICE AND FIELD TEST SET

(Forms 506 and 506-A Systems).

Order by Plate, Piece, Reference and Abbreviated Description Given in Heavy Face Type Only

PIECE	REF.	DESCRIPTION	DWG. REF.
232508	A	OFFICE AND FIELD TEST SET COMPLETE for Forms 506 and 506-A Centralized Traffic Control System Time Code Scheme. Includes "KP" Relay Racks and Impulse Transformer	D-2491-5
233076	2	CASE COMPLETE	C-9428-8
232507	3	FRONT PLATE	C-9428-13
161842	4	BACK PLATE COMPLETE	C-9246-56
	5	MACHINE SCREW, NO.10-32 x 1/4" Rd.Hd.S. (Head painted Olive Green) for attaching front and back plates to case.	
184994	6	RELAY BRACKET	10914-573
	7	MACHINE SCREW, NO.6-40 x 1/4" Flat Hd.Br. (N.P.)	
228789	8	RELAY COMPLETE (For details refer to Plate T-300)	B-12660-35
176508	9	RUBBER SUPPORT	8078-1524
	11	MACHINE SCREW, NO.10-32 x 3/8" Flat Hd.S. (Head painted Olive Green) for attaching back plate to case. (Not shown)	
232527	12	SWITCH (For 2 Position Operation)	9954-86
232509	13	SWITCH (For 9 Position Operation) (One circuit switch)	9954-85
232567	14	SWITCH (For 5 Position Operation) (Two circuit switch)	9954-67
232522	15	SWITCH (For 9 Position Operation) (Two circuit switch)	9954-85
213524	16	SWITCH (For 3 Position Operation)	9954-75
232525	17	SWITCH (For 5 Position Operation) (Four circuit switch)	9954-67
100465	18	SWITCH (For 7 Position Operation) (One circuit switch)	9954-68
232526	19	SWITCH (For 7 Position Operation) (Two circuit switch)	9954-68
C.N.62093	20	VOLTMETER, 0-30 Volt, with Screws and Nuts	
	21	MACHINE SCREW, NO.4-48 x 1/4" Flat Hd.Br. (Head painted Olive Green) For attaching switches to front plate	
	22	MACHINE SCREW, NO.4-48 x 1/4" Flat Hd.Br.(Head painted Olive Green) with No.4 Ph.Bz.Lock Washer and Nut Ref.22a. For attaching starting switches to front plate	

UNION SWITCH & SIGNAL CO.

PIECE	REF.	DESCRIPTION	DWG. REF.
29351	22a	NUT	8109-204
C.N.72739	23	TOGGLE SWITCH (S.P.S.T.)	
	24	MACHINE SCREW, NO.4-40 x 1/2" Flat Hd.Br. (Head painted Olive Green) For attaching toggle switches to front plate	
C.N.72788	25	SWITCH	
C.N.70292	26	FUSE BLOCK	
C.N.71153	27	FUSE, 10-Amp. 25-V.	
C.N.71158	28	FUSE, 1/2-Amp. 250-V.	
154829	29	LAMP RECEPTACLE COMPLETE (For details refer to Plate T-250)	12522-14
240193	30	SWITCHBOARD LAMP, 10-V	12409-15
240187	30a	SWITCHBOARD LAMP, 18-V	12409-15
	31	LAMP CAP (When ordering refer to Plate T-250)	
150399	32	NAME PLATE	8225-317
C.N.52694	33	SCREW, NO.2 x 3/16" (Tin Pl.) For attaching name plate to front plate	
175223	34	INSULATION	8750-2511
	35	MACHINE SCREW, NO.6-40 x 3/8" Rd.Hd.S. (N.P.) with Washer Ref.35a. For attaching insulation to case.	
20686	35a	WASHER	7828-108
	36	MACHINE SCREW, NO.10-30 x 5/16" Fil.Hd.S. (Tin Pl.)	
48800	37	WASHER (Used between switch and back of front plate)	
239272	38	RESISTOR, 200-Ohms	9065-330
239256	38a	RESISTOR, 100-Ohms	9065-329
239257	38b	RESISTOR, 600-Ohms	9065-329
239258	38c	RESISTOR, 1000-Ohms	9065-329
239259	38d	RESISTOR, 2000-Ohms	9065-329
	39	MACHINE SCREW, NO.6-40 x 1/4" Rd.Hd.Br. (N.P.) with Washer Ref.35a. For attaching fuse blocks to front plate.	
	40	MACHINE SCREW, NO.6-40 x 1-7/16" Flat Hd.Br. (Head painted Olive Green) with one Washer Ref.40a, one Washer Ref.40b, one Nut Ref.40c and two Washers Ref.40d. For attaching resistors to front plate.	
217250	40a	RUBBER WASHER	8078-253
52946	40b	BRASS WASHER	7828-184
1505	40c	NUT	8109-11
154851	40d	INS.WASHER	8078-931

UNION SWITCH & SIGNAL CO.

PIECE	REF.	DESCRIPTION	DWG. REF.
	40e	MACHINE SCREW, NO.6-40 x 2-1/2" Flat Hd.Br. (Head painted Olive Green) with one Washer Ref.40a, one Washer Ref.40b, one Nut Ref.40c and two Washers Ref.40d. For attaching resistors to front plate	
228827	41	24-WAY PLUG CONNECTOR COMPLETE. (Not shown) for Field L-C-S and Field Storage Units (Numbered 1 to 24) For details see Plate T-520..	C-9232-134
228828	41a	24-WAY PLUG CONNECTOR COMPLETE. (Not shown) for Field L-C-S and Field Storage Units (Numbered 25 to 48) For details see Plate T-520	C-9232-134
228829	41b	24-WAY PLUG CONNECTOR COMPLETE. (Not shown) for Field L-C-S Unit (Numbered 49 to 72) For details see Plate T-520.....	C-9232-134
228830	41c	24-WAY PLUG CONNECTOR COMPLETE. (Not shown) for Field L-C-S Unit (Numbered 73 to 96) For details see Plate T-520.....	C-9232-134
232530	41d	30-WAY PLUG CONNECTOR COMPLETE (Not shown) for Office L-C Unit (Numbered 1 to 30).....	C-9232-145
255163	41e	35-WAY PLUG CONNECTOR COMPLETE (Not shown) for Office L-C Unit (Numbered 31 to 65).....	C-9232-192
226832	43	IMPULSE TRANSFORMER COMPLETE (Not shown).....	C-9228-11
C.N.73788	44	RESISTOR, 500-Ohms. For use with Relay Ref.8 (Not shown)	
171554	45	PUSH BUTTON CIRCUIT CONTROLLER (Spring Return) For details refer to Plate T-255.....	B-9918-47
	46	GASKET, 1/16" x 1/2" x 21-3/16" long Black Felt. Used between back plate and case (Not shown)	
	46a	GASKET, 1/16" x 1/2" x 16-5/8" long Black Felt. Used between back plate and case (Not shown)	
229195	47	SINGLE UNIT STYLE "KP" RELAY RACK without Relay (For details refer to Plate T-350) (Not shown).....	C-16809-2
229194	47a	SINGLE UNIT STYLE "KP" RELAY RACK WITH RELAY (For details refer to Plate T-350) (Not shown).....	C-16809-2
236917	47b	TWIN UNIT STYLE "KP" RELAY RACK without Relays (For details refer to Plate T-350) (Not shown).....	C-16809-3
236919	47c	TWIN UNIT STYLE "KP" RELAY RACK WITH RELAYS (For details refer to Plate T-350) (Not shown).....	C-16809-3

LAMP CAP COLORS:-
R-RED
G-GREEN
A-AMBER

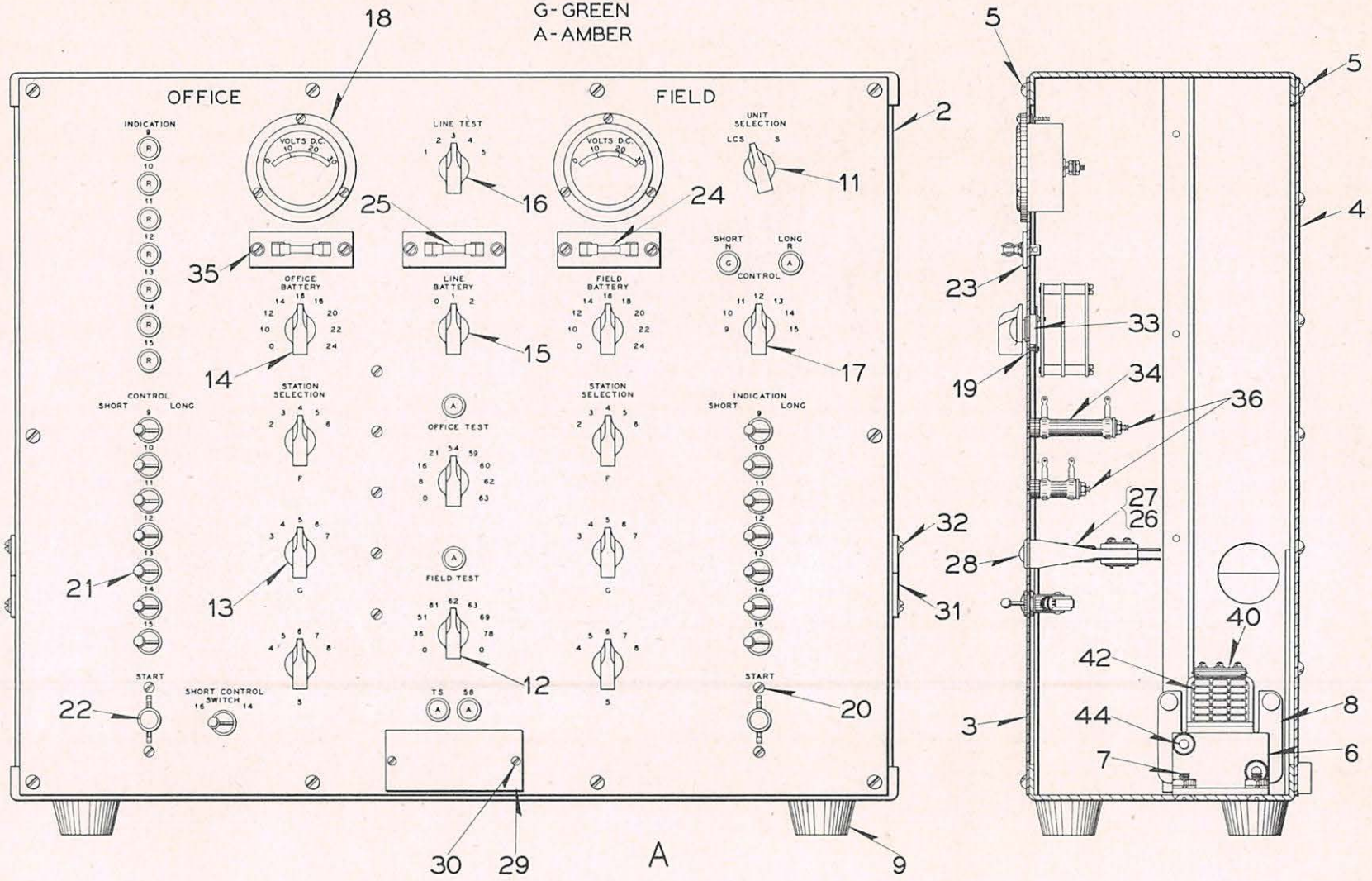

A

7-15-47

OFFICE & FIELD TEST SET (506-B SYSTEM)

UNION SWITCH & SIGNAL CO.

OFFICE AND FIELD TEST SET
(506-B SYSTEM)

Order by Plate, Piece, Reference and Abbreviated Description Given in Heavy Face Type Only

PIECE	REF.	DESCRIPTION	DWG. REF.
248437	A	OFFICE AND FIELD TEST SET COMPLETE for Form 506B Centralized Traffic Control System Time Code Scheme. Includes "KP" Relay Racks and Impulse Transformer	D-2491-5B
248234	2	CASE COMPLETE	C-9428-8
248406	3	FRONT PLATE	C-9428-13A
161842	4	BACK PLATE COMPLETE	C-9246-56
	5	MACHINE SCREW, NO.10-32 x 1/4" Rd.Hd.S. (Head painted Olive Green) for attaching front and back plates to case.	
248235	6	RELAY BRACKET	10914-1684
	7	MACHINE SCREW, NO.14-24 x 9/16" Flat Hd.S. (Tin Pl.) with Nut Ref.7a and 1/4" Pl.S.Lock Washer (M) (Tin Pl.)	
29103	7a	NUT	8109-194
245877	8	RELAY COMPLETE (For details refer to Plate T-322)	B-12842-4
176508	9	RUBBER SUPPORT	8078-1524
	10	MACHINE SCREW, NO.10-32 x 3/8" Flat Hd.S. (Head painted Olive Green) for attaching back plate to case. (Not shown)	
232527	11	SWITCH (For 2 Position Operation)	9954-86
232509	12	SWITCH (For 9 Position Operation) (One Circuit Switch)	9954-85
232567	13	SWITCH (For 5 Position Operation) (Two Circuit Switch)	9954-67
232522	14	SWITCH (For 9 Position Operation) (Two Circuit Switch)	9954-85
213524	15	SWITCH (For 3 Position Operation)	9954-75
232525	16	SWITCH (For 5 Position Operation) (Four Circuit Switch)	9954-67
232526	17	SWITCH (For 7 Position Operation) (Two Circuit Switch)	9954-68
C.N.62093	18	VOLTMETER, 0-30 Volt, with Screws and Nuts	
	19	MACHINE SCREW, NO.4-48 x 1/4" Flat Hd.Br. (Head painted Olive Green) for attaching switches to front plate	
	20	MACHINE SCREW, NO.4-48 x 1/4" Flat Hd.Br. (Head painted Olive Green) with No.4 Ph.Bz.Lock Washer and Nut Ref.20a for attaching starting switches to front plate.	

UNION SWITCH & SIGNAL CO.

PIECE	REF.	DESCRIPTION	DWG. REF.
29351	20a	NUT	8109-204
C.N.72739	21	TOGGLE SWITCH (S.P.S.T.)	
C.N.72788	22	SWITCH	
270921	23	FUSE MOUNTING	9014-29
C.N.71153	24	FUSE, 10-Amp. 25-V.	
C.N.71158	25	FUSE, 1/2-Amp. 250-V.	
154829	26	LAMP RECEPTACLE COMPLETE (For details refer to Plate T-250)	12522-14
240193	27	SWITCHBOARD LAMP, 10-V	12409-15
240187	27a	SWITCHBOARD LAMP, 18-V	12409-15
	28	LAMP CAP (When ordering refer to Plate T-250)	
245864	29	NAME PLATE	8225-746
C.N.52674	30	SCREW, NO.4 x 3/16" (Tin Pl.) for attaching name plate to front plate	
175223	31	INSULATION	8750-2511
	32	MACHINE SCREW, NO.6-40 x 3/8" Rd.Hd.S. (N.P.) with Washer Ref.32a, for attaching insulation to case	
20686	32a	WASHER	7828-108
48800	33	WASHER (Used between switch and back of front plate)	7828-184
239272	34	RESISTOR, 200-Ohms	9065-330
239256	34a	RESISTOR, 100-Ohms	9065-329
239257	34b	RESISTOR, 600-Ohms	9065-329
239258	34c	RESISTOR, 1000-Ohms	9065-329
239259	34d	RESISTOR, 2000-Ohms	9065-329
	35	MACHINE SCREW, NO.6-40 x 1/4" Rd.Hd. Br. (N.P.) with Washer Ref. 32a for attaching fuse blocks to front plate.	
	36	MACHINE SCREW, NO.6-40 x 1-7/16" Flat Hd.Br. (Head painted Olive Green) with one Washer Ref.36b, one Washer Ref.36c, one Nut Ref.36d and two Washers Ref.36e for attaching resistors to front plate.	
	36a	MACHINE SCREW, NO.6-40 x 2-1/2" Flat Hd.Br. (Head painted Olive Green) with one Washer Ref.36b, one Washer Ref.36c, one Nut Ref.36d and two Washers Ref.36e for attaching Resistors to front plate.	
217250	36b	RUBBER WASHER	8078-253
52946	36c	BRASS WASHER	7828-184
1505	36d	NUT	8109-11
154851	36e	INS.WASHER	8078-931

UNION SWITCH & SIGNAL CO.

PIECE	REF.	DESCRIPTION	DWG. REF.
228827	37	24-WAY PLUG CONNECTOR COMPLETE (Not shown) for Field L-C-S and Field Storage Units (Numbered 1 to 24) for details see Plate T-520...	C-9232-134
228828	37a	24-WAY PLUG CONNECTOR COMPLETE (Not shown) for Field L-C-S and Field Storage Units (Numbered 25 to 48) for details see Plate T-520..	C-9232-134
228829	37b	24-WAY PLUG CONNECTOR COMPLETE (Not shown) for Field L-C-S Unit (Numbered 49 to 72) for details see Plate T-520.....	C-9232-134
228830	37c	24-WAY PLUG CONNECTOR COMPLETE (Not shown) for Field L-C-S Unit (Numbered 73 to 96) for details see Plate T-520.....	C-9232-134
184690	37d	25-WAY PLUG CONNECTOR COMPLETE (Not shown) for Office L-C Unit (Numbered 1 to 25).....	C-9232-51
184689	37e	25-WAY PLUG CONNECTOR COMPLETE (Not shown) for Office L-C Unit (Numbered 26 to 50).....	C-9232-51
226605	37f	25-WAY PLUG CONNECTOR COMPLETE (Not shown) for Office L-C Unit (Numbered 51 to 75).....	C-9232-45
229195	38	SINGLE UNIT STYLE "KP" RELAY RACK without Relay (For details refer to Plate T-350) (Not shown).....	C-16809-2
236917	38a	TWIN UNIT STYLE "KP" RELAY RACK without Relays (For details refer to Plate T-350) (Not shown).....	C-16809-3
226832	39	IMPULSE TRANSFORMER COMPLETE (Not shown).....	C-9228-11
239190	40	RESISTOR, 250-Ohms. For use with Relay Ref.8 (Not shown).....	9065-326
	41	GASKET, 1/16" x 1/2" x 21-3/16" long black felt. Used between back plate and case (Not shown)	
	41a	GASKET, 1/16" x 1/2" x 16-5/8" long black felt. Used between back plate and case (Not shown)	
245933	42	MOUNTING BASE.....	B-12842-6
245800	43	TAG for Relay Ref.8 (Orders should specify marking desired)(Not shown).	8988-193
	44	BOLT Ref. 44a with Nut Ref. 7a and 1/4" Pl. S. Lock Washer (M) (Tin Pl.)	
119627	44a	BOLT ONLY.....	8098-982

LAMP CAP COLORS:-
R - RED
A - AMBER

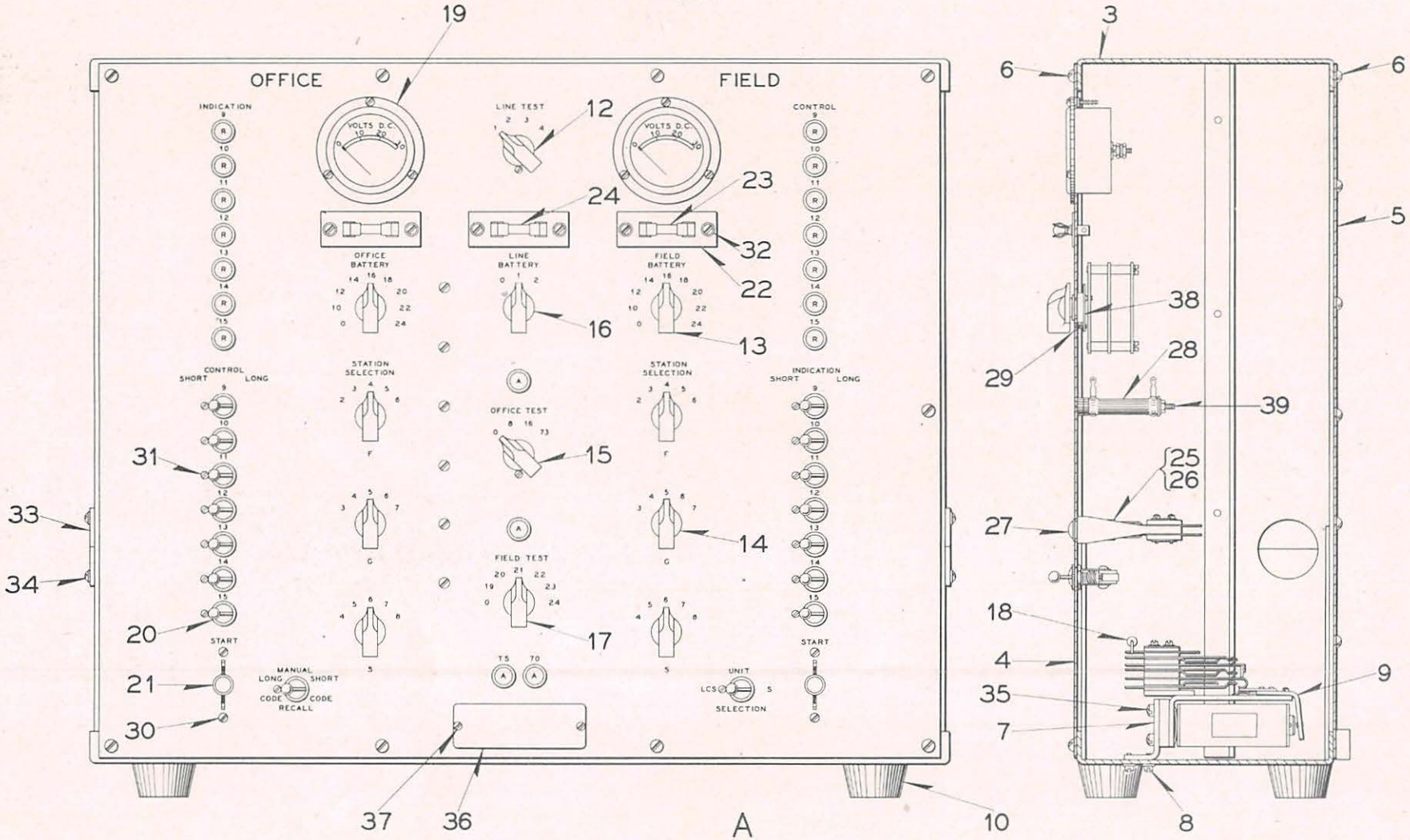

PLATE T-553

7-15-47

OFFICE & FIELD TEST SET (504-B & 504-C) SYSTEMS

UNION SWITCH & SIGNAL CO.

OFFICE AND FIELD TEST SET

(Forms 504-B and 504-C Systems)

Order by Plate, Piece, Reference and Abbreviated Description Given in Heavy Face Type Only

PIECE	REF.	DESCRIPTION	DWG. REF.
257970	A	OFFICE AND FIELD TEST SET COMPLETE for Forms 504-B and 504-C Centralized Traffic Control System Time Code Scheme. Includes Transformer Ref.2.	D-2491-8
226832	2	TRANSFORMER COMPLETE (Not shown)	C-9228-11
233076	3	CASE COMPLETE	C-9428-8
258121	4	FRONT PLATE	C-9428-22
161842	5	BACK PLATE COMPLETE	C-9246-56
	6	MACHINE SCREW, NO.10-32 x 1/4" Rd.Hd.S. (Head painted Olive Green) for attaching front and back plates to case.	
184994	7	RELAY BRACKET	10914-573
	8	MACHINE SCREW, NO.8-36 x 3/8" Fil.Hd.Br. (N.P.) with No.8 S. Lock Washer (Int.Teeth) (Tin Pl.)	
102581	9	RELAY COMPLETE (For details refer to Plate T-300)	B-12660-30
176508	10	RUBBER SUPPORT	8078-1524
	11	MACHINE SCREW, NO.10-32 x 3/8" Flat Hd.S. (Head painted Olive Green) for attaching back plate to case (Not shown)	
258046	12	SWITCH (For 4 position operation) (Four circuit switch)	9954-112
252509	13	SWITCH (For 9 position operation) (One circuit switch)	9954-85
232567	14	SWITCH (For 5 position operation) (Two circuit switch)	9954-67
258047	15	SWITCH (For 4 position operation) (Two circuit switch)	9954-112
213524	16	SWITCH (For 3 position operation) (Three circuit switch)	9954-75
232526	17	SWITCH (For 7 position operation) (Two circuit switch)	9954-68
C.N.73788	18	RESISTOR, 500-Ohms. For use with Relay Ref.9	
C.N.62093	19	VOLTMETER, 0-30 Volt, with screws and nuts	
237510	20	TOGGLE SWITCH (S.P.D.T.)	9954-92
C.N.72788	21	SWITCH	
270921	22	FUSE MOUNTING	9014-29

UNION SWITCH & SIGNAL CO.

PIECE	REF.	DESCRIPTION	DWG. REF.
C.N.71153	23	FUSE, 10-Amp. 25-V.	
C.N.71158	24	FUSE, 1/2-Amp. 250-V.	
154829	25	LAMP RECEPTACLE COMPLETE. (For details refer to Plate T-250)....	12522-14
240193	26	SWITCHBOARD LAMP, 10-V.....	12409-15
240187	26a	SWITCHBOARD LAMP, 18-V.....	12409-15
	27	LAMP CAP (When ordering refer to Plate T-250).	
239268	28	RESISTOR, 40-Ohms.....	9065-330
239272	28a	RESISTOR, 200-Ohms.....	9065-330
239275	28b	RESISTOR, 300-Ohms.....	9065-330
239278	28c	RESISTOR, 1000-Ohms.....	9065-330
255530	28d	RESISTOR, 2500-Ohms.....	9065-330
	29	MACHINE SCREW, NO.4-48 x 1/4" Flat Hd.Br. (Head painted Olive Green) for attaching switches to front plate	
	30	MACHINE SCREW, NO.4-48 x 1/4" Flat Hd.Br. (Head painted Olive Green) with No.4 Ph.Bz.Lock Washer (Int.Teeth) (N.P.) and Nut.Ref.30a for attaching starting switches to front plate.	
29351	30a	NUT.....	8109-204
	31	MACHINE SCREW, NO.4-40 x 3/8" Flat Hd.Br. (Head painted Olive Green) for attaching toggle switches to front plate	
	32	MACHINE SCREW, NO.6-40 x 1/4" Rd.Hd.Br. (N.P.) with Washer Ref.32a for attaching fuse blocks to front plate	
20686	32a	WASHER.....	7828-108
175223	33	INSULATION.....	8750-2511
	34	MACHINE SCREW, NO.6-40 x 3/8" Rd.Hd.S. (N.P.) with Washer Ref.32a for attaching insulation to case	
	35	MACHINE SCREW, NO.10-30 x 5/16" Fil.Hd.S. (Tin Pl.) for attaching relay to bracket	
150399	36	NAME PLATE.....	8225-317
	37	MACHINE SCREW, NO.2 x 3/16" Binding Hd. (Tin Pl.)	
48800	38	WASHER (Used between switch and back of front plate).....	7828-184
	39	MACHINE SCREW, NO.6-40 x 2-1/2" Flat Hd.Br. (Head painted Olive Green) with one Washer Ref.39a, one Washer Ref.39b, one Nut Ref.39c and two Washers Ref.39d for attaching resistors to front plate.	
217250	39a	RUBBER WASHER.....	8078-253
52946	39b	BRASS WASHER.....	7828-184

UNION SWITCH & SIGNAL CO.

PIECE	REF.	DESCRIPTION	DWG. REF.
1505	39c	NUT	8109-11
154851	39d	INS.WASHER	8078-931
	40	GASKET, 1/16" x 1/2" x 21-3/16" long black felt. Used between back plate and case (Not shown)	
	40a	GASKET, 1/16" x 1/2" x 16-5/8" long black felt. Used between back plate and case (Not shown)	
141452	41	TAG (Orders should specify marking desired) (Not shown)	8988-71
184690	42	25-WAY PLUG CONNECTOR COMPLETE. Terminals numbered 1 to 25 (Not shown) for Field L-C-S and Office L-C Units. For details see Plate T-520	C-9232-51
184689	42a	25-WAY PLUG CONNECTOR COMPLETE. Terminals numbered 26 to 50 (Not shown) for Field L-C-S and Office L-C Units. For details see Plate T-520	C-9232-51
101931	42b	30-WAY PLUG CONNECTOR COMPLETE. Terminals numbered 51 to 80 (Not shown) for Field L-C-S Unit. For details see Plate T-520	C-9232-105
109172	42c	25-WAY PLUG CONNECTOR COMPLETE. Terminals numbered 51 to 75 (Not shown) for Office L-C Unit. For details see Plate T-520	C-9232-105
184691	42d	25-WAY PLUG CONNECTOR COMPLETE. Terminals numbered 26 to 50 (Not shown) for details see Plate T-520	C-9232-51
109134	42e	5-WAY PLUG CONNECTOR COMPLETE. (Not shown) for Field Line Relay	C-16642-7
219119	42f	7-WAY PLUG CONNECTOR COMPLETE. (Not shown) for Office Line Relay	C-16642-7

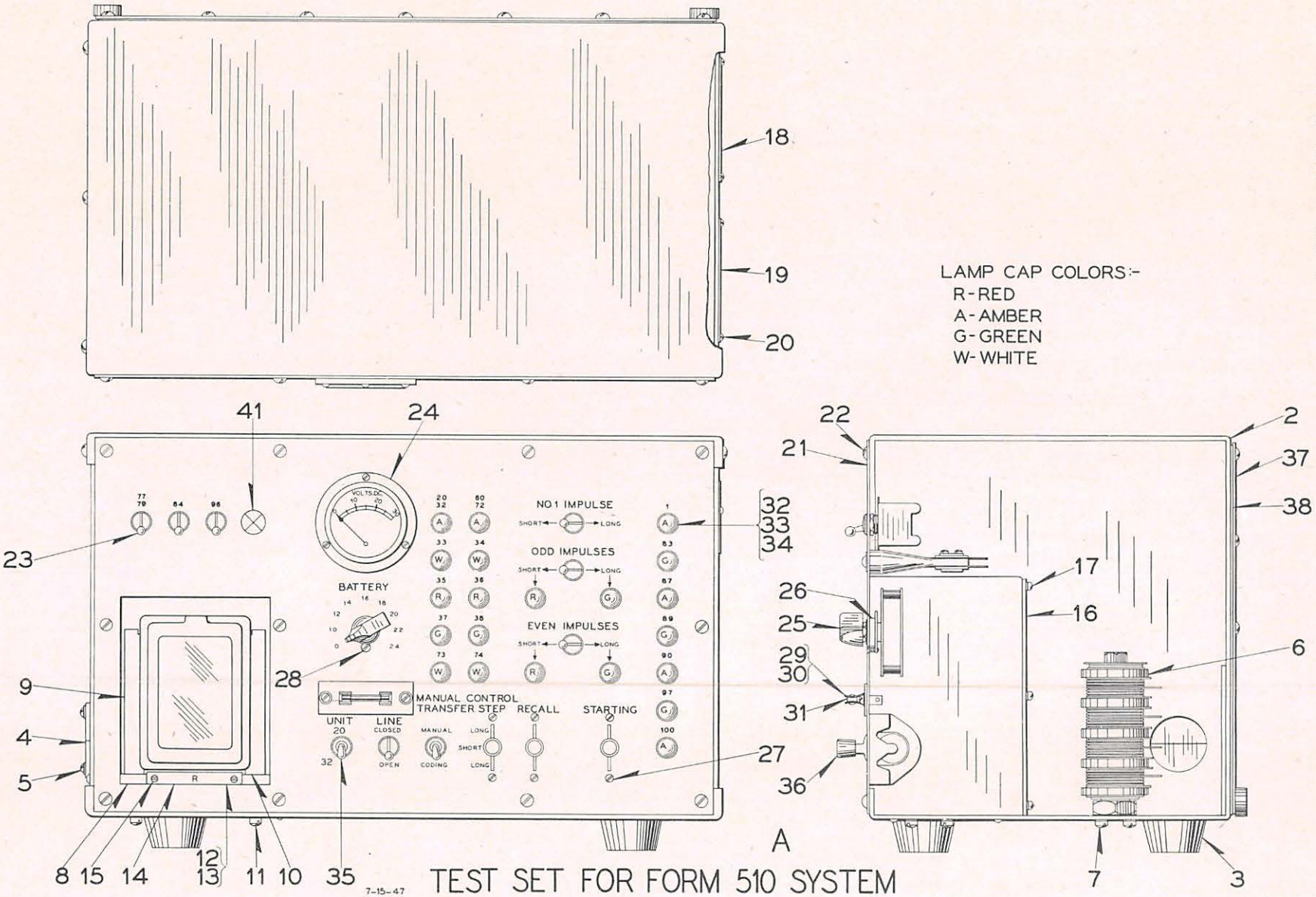

TEST SET FOR FORM 510 SYSTEM

UNION SWITCH & SIGNAL CO.

TEST SET

(Form 510 System)

Order by Plate, Piece, Reference and Abbreviated Description Given in Heavy Face Type Only

PIECE	REF.	DESCRIPTION	DWG. REF.
246324	A	TEST SET COMPLETE for Single Station Type L Form 510 Centralized Traffic Control System Time Code Scheme	D-2491-7
243631	2	CABINET COMPLETE	C-9428-19
176508	3	RUBBER SUPPORT	8078-1524
175223	4	INSULATION	8750-2511
	5	MACHINE SCREW, NO.6-40 x 3/8" Rd.Hd.S. (N.P.) with Washer Ref.5a	
20686	5a	WASHER	7828-108
243493	6	RECTIFIER COMPLETE	12558-50
	7	MACHINE SCREW, NO.10-30 x 7/16" Fil.Hd.S. (Tin Pl.) with No.10 Pl.S. Lock Washer (M) (Tin Pl.) for attaching Rectifier to Cabinet	
246329	8	"KP" RELAY MOUNTING BLOCK	12443-531
191406	9	L.H. PLUG CONNECTOR COMPLETE	12789-1
191407	10	R.H. PLUG CONNECTOR COMPLETE	12789-1
	11	MACHINE SCREW, NO.10-30 x 1-3/8" Fil.Hd.S. (Tin Pl.) with No.10 Pl. S. Lock Washer (M) (Tin Pl.) for attaching "KP" Relay Mounting Block and Plug Connector to Cabinet	
191419	12	RELAY GUIDE	11893-893
191422	13	PIN	8114-951
251451	14	TAG (marked "R")	8988-196
	15	SCREW, NO.2 x 1/8" Rd.Hd.Hardened (Tin Pl.)	
246330	16	REAR COVER ("KP" Relay Compartment)	8750-3190
	17	MACHINE SCREW, NO.6-40 x 1/4" Fil.Hd.S. (Tin Pl.) with No.6 S.Lock Washer (Int.Teeth) (Tin Pl.) for attaching Rear Cover to "KP" Relay Compartment.	
103845	18	NAME PLATE	8225-519
245864	19	NAME PLATE	8225-746
	20	SCREW, NO.4 x 3/16" Rd.Hd.Hardened (Tin Pl.) for attaching Name Plates to Cabinet	

UNION SWITCH & SIGNAL CO.

PIECE	REF.	DESCRIPTION	DWG. REF.
243626	21	FRONT PLATE	C-9428-15
	22	MACHINE SCREW, NO.10-32 x 1/4" Rd.Hd.S. (Head painted Olive Green) for attaching Front Plate and Rear Cover Plate to Cabinet	
237510	23	TOGGLE SWITCH	9954-92
C.N.62093	24	VOLTMETER, 0-30 Volt, with Screws and Nuts	
232509	25	SWITCH (For 9 Position Operation) (One Circuit Switch)	9954-85
48800	26	WASHER (Used between switch and back of front plate)	7828-184
	27	MACHINE SCREW, NO.4-48 x 1/4" Flat Hd.Br. (Head painted Olive Green) with Nut Ref.27a and No.4 Ph.Bz.Lock Washer (Int.Teeth) (N.P.) for attaching starting switches to front plate	
29351	27a	NUT	8109-204
	28	MACHINE SCREW, NO.4-48 x 1/4" Flat Hd.Br. (Head painted Olive Green) for attaching switch to front plate	
270921	29	FUSE MOUNTING	9014-29
	30	MACHINE SCREW, NO.6-40 x 1/4" Rd.Hd.Br. (N.P.) with Washer Ref.5a, for attaching fuse block to front plate	
C.N.71153	31	FUSE, 10-Amp., 25-V.	
154829	32	LAMP RECEPTACLE COMPLETE (For details refer to Plate T-250)	12522-14
	33	LAMP CAP (When ordering refer to Plate T-250)	
240190	34	SWITCHBOARD LAMP, 6-V	12409-15
240193	34a	SWITCHBOARD LAMP, 10-V	12409-15
240187	34b	SWITCHBOARD LAMP, 18-V	12409-15
C.N.72809	35	BAT HANDLE D.P.D.T. TOGGLE SWITCH	
C.N.72788	36	SWITCH	
228823	37	REAR COVER PLATE COMPLETE	C-9232-130
	38	GASKET, 1/16" x 1/2" x 8-13/16" long black felt	
	38a	GASKET, 1/16" x 1/2" x 16-5/16" long black felt	
	39	MACHINE SCREW, NO.10-32 x 3/8" Flat Hd.S. (Head painted Olive Green) for attaching Rear Cover Plate to Cabinet (Not shown)	
239163	40	RESISTOR, 1000-Ohms (Not shown) Used between Fuse and Line Toggle Switch	9065-325
224931	41	PLUG	9511-162
243188	42	24-WAY PLUG CONNECTOR COMPLETE (Not shown) (Numbered 1 to 24)	C-9232-157
243189	42a	24-WAY PLUG CONNECTOR COMPLETE (Not shown) (Numbered 25 to 48)	C-9232-157
243190	42b	32-WAY PLUG CONNECTOR COMPLETE (Not shown)(Numbered 49 to 80)	C-9232-157
243191	42c	32-WAY PLUG CONNECTOR COMPLETE (Not shown)(Numbered 81 to 112)	C-9232-157

PLATE T-566

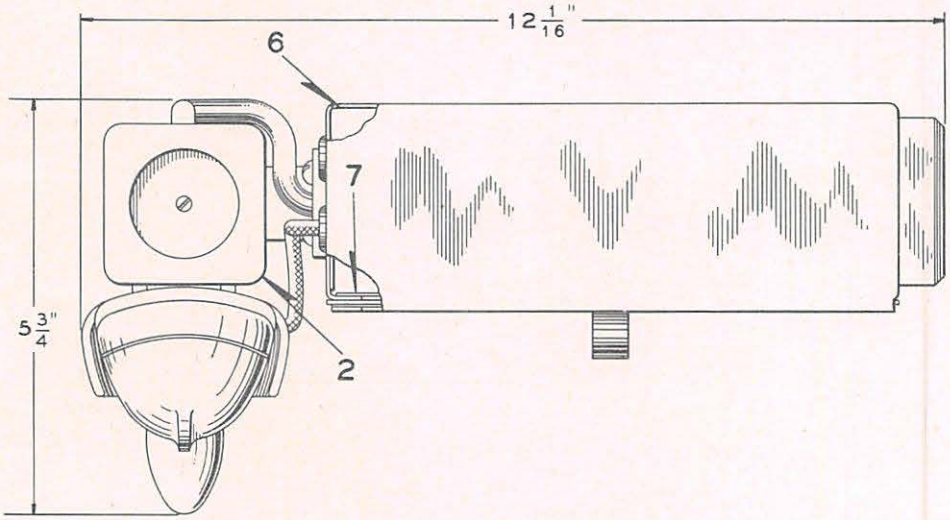

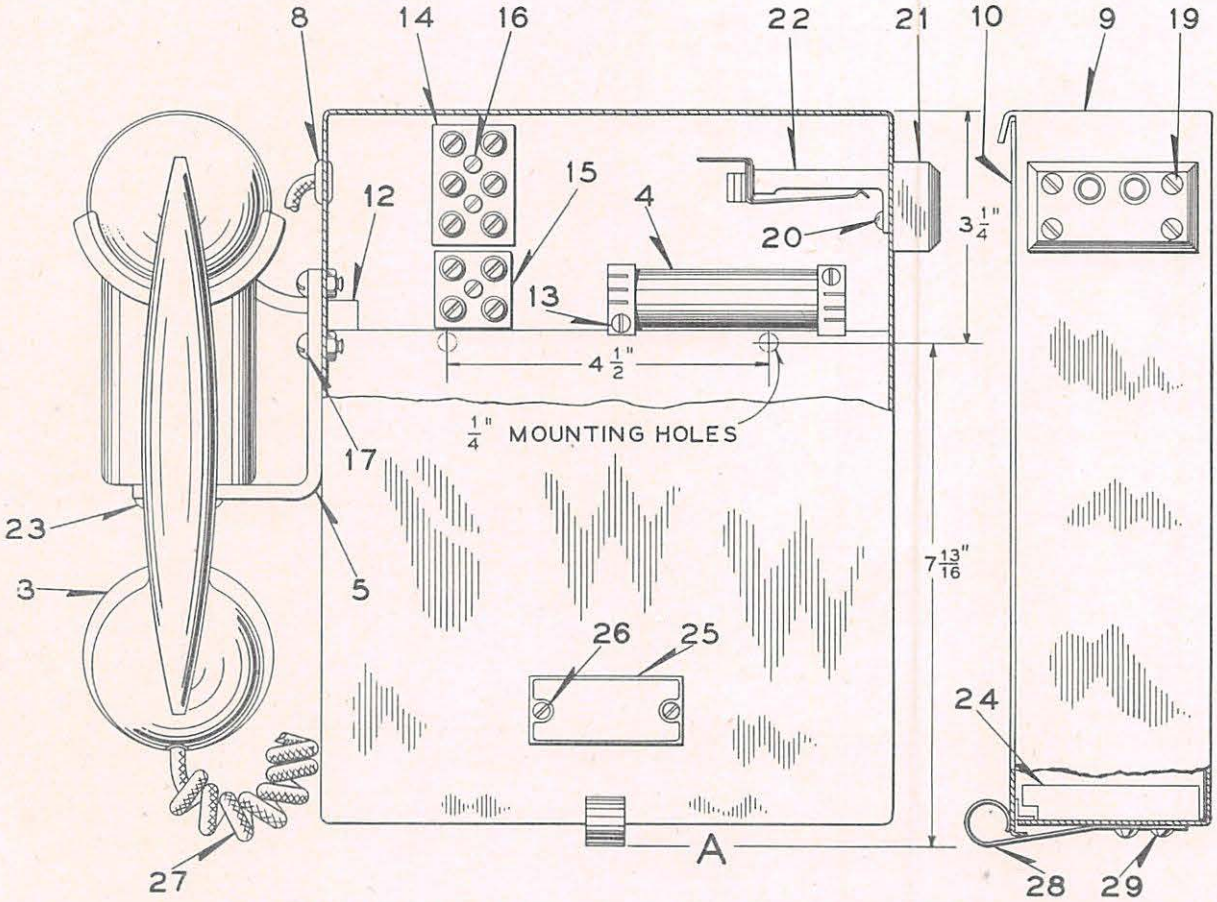

TELEPHONE SET WITH JACKS

7-15-47
3-30-44

UNION SWITCH & SIGNAL CO.

TELEPHONE SET WITH JACKS FOR
MAINTAINERS BREAST SET
(FOR USE ON C.T.C. LINES)

When Carrier Frequencies are not involved, one Capacitor Filter Ref. A Plate T-581 should be ordered separately for each telephone for connection between the telephone and the line.

When Carrier Frequencies are involved, one Reactor Filter Ref.B Plate T-581 and one Capacitor Filter Ref.Aa Plate T-581 should be ordered separately for each telephone for connection in series between the telephone and the line.

For telephones applied to Switch Locks for use on C.T.C. lines refer to Plates E-5803 and E-5813.

Order by Plate, Piece, Reference and Abbreviated Description Given in Heavy Face Type Only

PIECE	REF.	DESCRIPTION	DWG. REF.
234523	A	TELEPHONE SET COMPLETE as shown	C-8638-5
241691	2	HANDSET MOUNTING COMPLETE (For details refer to Plate T-565)	C-16783-11
C.N.72536	3	HANDSET without Cord	
C.N.70700	4	INDUCTION COIL	
	5	HANDSET MOUNTING BRACKET (P-454391)	
240864	6	INSULATION	8750-2064
240865	7	INSULATION	8750-2064
C.N.75413	8	RUBBER GROMMET	
234707	9	BOX COMPLETE (Inc.1-9a, 1-10 and 1-12)	C-8638-5
234695	9a	BOX WITH SPRING CLIP (Inc.1-27 and 2-28)	C-16783-9
246177	10	COVER COMPLETE	C-16783-9
C.N.69689	12	BUSHING	
	13	MACHINE SCREW, NO.6-40 x 1-1/4" Rd.Hd.Br. (N.P.) with No.6 Pl.S. Lock Washer (M) (Tin Pl.) and Nut Ref. 13a, for attaching Induction Coil to Box	
1505	13a	NUT	8109-11
C.N.70237	14	3-WAY CONNECTING BLOCK	
	15	2-WAY CONNECTING BLOCK	
	16	MACHINE SCREW, NO.6-40 x 5/8" Rd.Hd.Br. (N.P.) with No.6 Pl.S.Lock Washer (M) (Tin Pl.) and Nut Ref. 13a, for attaching Connecting Blocks to Box	
	17	MACHINE SCREW, NO.10-30 x 7/16" Rd.Hd.Br. (N.P.) with Nut Ref.17a, for attaching Handset Mounting Bracket to Box	
44230	17a	NUT	8109-281
195517	18	EYELET, Used for all connections to Handset Mounting and Connecting Blocks (except on leads from Handset). Not shown	8064-299
45302	18a	EYELET. Used on all connections to dry cells. (Not shown)	8064-299

UNION SWITCH & SIGNAL CO.

PIECE	REF.	DESCRIPTION	DWG. REF.
	19	MACHINE SCREW, NO.10-30 x 7/8" Flat Hd.Br. (N.P.) with No.10 Pl.S. Lock Washer (M) (Tin Pl.) and Nut Ref. 17a, for attaching Jack Mounting Block to Box	
	20	MACHINE SCREW, NO.6-32 x 1/2" Rd.Hd.Br. (N.P.) for attaching Phone Jack to Jack Mounting Block	
	21	JACK MOUNTING BLOCK (Type No.80)	
	22	JACK (Type No.99)	
	23	SCREW (P-207028). For attaching Handset Mounting to Handset Mounting Bracket	
246193	24	BATTERY BLOCK.....	12443-529
257787	25	NAME PLATE.....	8225-268
	26	MACHINE SCREW, NO.6-40 x 1/4" Rd.Hd.Br. (N.P.) with Nut Ref.26a	
30456	26a	NUT.....	8109-212
C.N.45481	27	RETRACTILE CORD	
246038	28	SPRING.....	8735-1033
	29	RIVET, 3/16" x 1/4" Rd.Hd.I.	
	30	BREAST SET AND HEAD BAND RECEIVER COMPLETE (Not shown) (Inc.1-30a, 1-30b, 1-30c, 1-30d and 1-30e)	
	30a	TRANSMITTER (650B)	
	30b	HEADSET (716E)	
	30c	TRANSMITTER ATTACHMENT (3A)	
	30d	TWIN PLUG (289A)	
	30e	CORD 15 ft.long (L4P)	

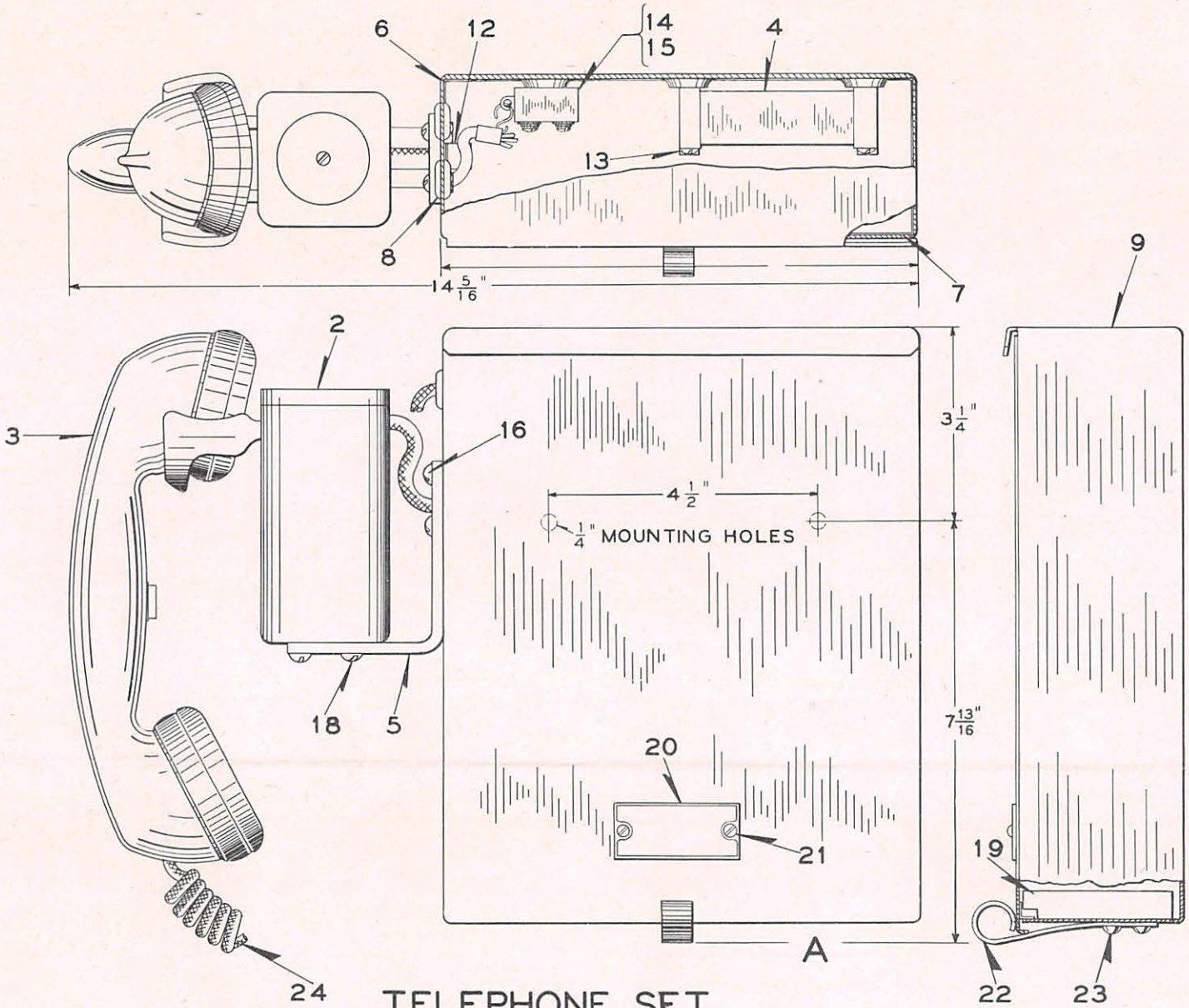

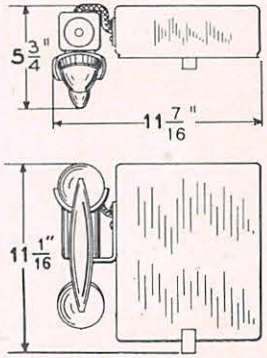

WHEN NECESSARY FOR CLEARANCE PURPOSES TELEPHONE SET MAY BE ASSEMBLED AS SHOWN ABOVE. REMOVE THE FOUR SCREWS REF. 18, ROTATE HANDSET MOUNTING 90° AND REASSEMBLE.

7-15-47
3-30-44

TELEPHONE SET

UNION SWITCH & SIGNAL CO.

TELEPHONE SET
(FOR USE ON C.T.C.LINES)

When Carrier Frequencies are not involved, one Capacitor Filter Ref. A Plate T-581 should be ordered separately for each telephone for connection between the telephone and the line.

When Carrier Frequencies are involved, one Reactor Filter Ref. B Plate T-581 and one Capacitor Filter Ref.Aa Plate T-581 should be ordered separately for each telephone for connection in series between the telephone and the line.

For telephones applied to Switch Locks for use on C.T.C. lines refer to Plates E-5803 and E-5813.

Order by Plate, Piece, Reference and Abbreviated Description Given in Heavy Face Type Only

PIECE	REF.	DESCRIPTION	DWG. REF.
235082	A	TELEPHONE SET COMPLETE as shown	C-8638-6
241740	Aa	TELEPHONE SET COMPLETE with 9 ft. 0 in. Cord	C-8638-6
241691	2	HANDSET MOUNTING COMPLETE (For details refer to Plate T-565)	C-16783-11
C.N.72536	3	HANDSET without Cord for Ref.A	
C.N.72547	3a	HANDSET WITH 9 FT. 0 IN. CORD for Ref.Aa	
C.N.70700	4	INDUCTION COIL	
	5	HANDSET MOUNTING BRACKET (P-454391)	
240864	6	INSULATION	8750-2064
240865	7	INSULATION	8750-2064
C.N.75413	8	RUBBER GROMMET	
235460	9	BOX COMPLETE (Inc.1-9a, 1-10 and 1-12)	C-8638-6
235459	9a	BOX WITH SPRING CLIP (Inc.1-22 and 2-23)	C-16783-9
246177	10	COVER COMPLETE	C-16783-9
C.N.69689	12	BUSHING	
	13	MACHINE SCREW, NO.6-40 x 1-1/4" Rd.Hd.Br. (N.P.) with No.6 Pl.S. Lock Washer (M) (Tin Pl.) and Nut Ref. 13a, for attaching Induction Coil to Box	
1505	13a	NUT	8109-11
C.N.70237	14	3-WAY CONNECTING BLOCK	
	14a	2-WAY CONNECTING BLOCK	
	15	MACHINE SCREW, NO.6-40 x 5/8" Rd.Hd.Br. (N.P.) with No.6 Pl.S.Lock Washer (M) (Tin Pl.) and Nut Ref. 13a, for attaching Connecting Blocks to Box	
	16	MACHINE SCREW, NO.10-30 x 7/16" Rd.Hd.Br. (N.P.) with Nut Ref.16a, for attaching Handset Mounting Bracket to Box	
44230	16a	NUT	8109-281

UNION SWITCH & SIGNAL CO.

PIECE	REF.	DESCRIPTION	DWG. REF.
195517	17	EYELET. Used for all connections to Handset Mounting and Connecting Blocks (except on leads from Handset) Not shown	8064-299
45301	17a	EYELET. Used on all connections to dry cells. (Not shown)	8064-299
	18	SCREW (P-207028). For attaching Handset Mounting to Handset Mounting Bracket	
246193	19	BATTERY BLOCK	12443-529
257788	20	NAME PLATE for Ref.A	8225-268
257789	20a	NAME PLATE for Ref.Aa	8225-268
	21	MACHINE SCREW, NO.6-40 x 1/4" Rd.Hd.Br. (N.P.) with Nut Ref.21a	
30456	21a	NUT	8109-212
246038	22	SPRING	8735-1033
	23	RIVET, 3/16" x 1/4" Rd.Hd.I.	
C.N.45481	24	RETRACTILE CORD for Ref.3	

7-15-47

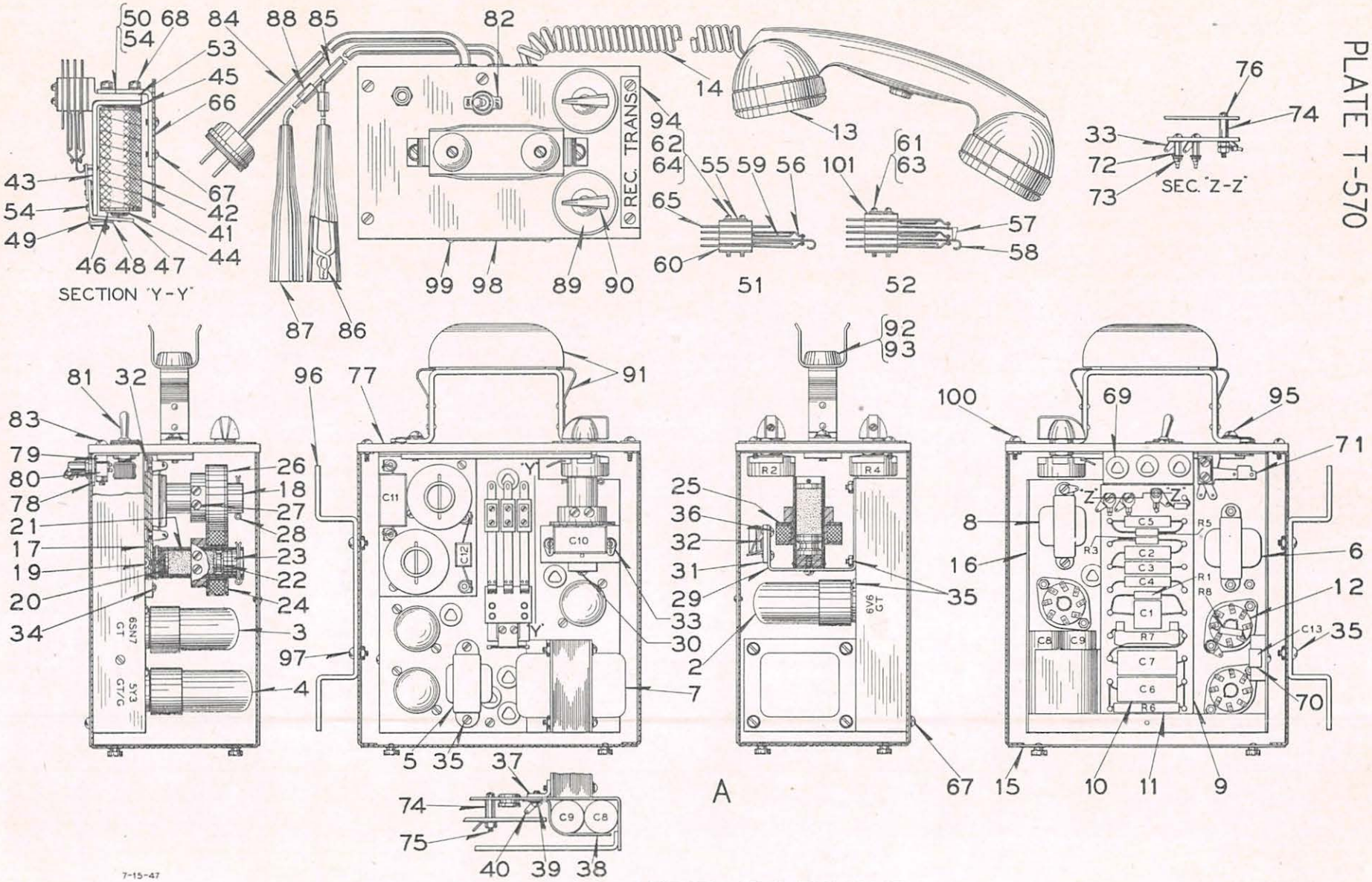

7-15-47

PORTABLE CARRIER TELEPHONE

UNION SWITCH & SIGNAL CO.

PORTABLE CARRIER TELEPHONE

Order by Plate, Piece, Reference and Abbreviated Description Given in Heavy Face Type Only

PIECE	REF.	DESCRIPTION	DWG. REF.
259353	A	PORTABLE CARRIER TELEPHONE COMPLETE with Resistors and Condensers.....	D-2589-1
C.N.73275	2	TUBE (Type 6V6GT)	
C.N.73276	3	TUBE (Type 6SN7GT)	
C.N.730023	4	TUBE (Type (5Y3GT)	
C.N.720122	5	FILTER CHOKE	
C.N.730022	6	OUTPUT TRANSFORMER	
C.N.730020	7	POWER TRANSFORMER	
C.N.730021	8	MICROPHONE TRANSFORMER	
263024	9	RESISTOR AND TERMINAL BOARD COMPLETE with 2 Spacers Ref.72, 2 Locking Terminals Ref.33, 2 Screws Ref.73a and 19 Turret Lugs. (Without Condensers or Resistors).....	C-16891-2

CONDENSER

COMMODITY NO.	REF.	LEGEND	CAPACITY MFD.	CAPACITY VOLTS	DWG.REF.
70913	10	C1	0.001		
700503	10a	C2	0.01	400	
700741	10b	C3-C13	0.005	600	
700740	10c	C4-C5	0.0005	600	
700552	10d	C6-C7	25	50	
70908	10e	C8-C9	16	450	
700507	10f	C10	0.001	3000	
700530	10g	C11	0.00025	3000	
700712	10h	C12	0.0005	500	

UNION SWITCH & SIGNAL CO.

RESISTOR					
PIECE	REF.	LEGEND	CAPACITY WATTS	RESISTANCE OHMS	DWG.REF.
239210	11	R1	1/2	100,000	9065-327
240418	11a	R2-R4	1/2	250,000	9065-337
239208	11b	R3	1/2	51,000	9065-327
239214	11c	R5	1/2	240,000	9065-327
239324	11d	R6	2	2,400	9065-305
239282	11e	R7	3.5	12,000	9065-330
239192	11f	R8	1/2	510	9065-327
239217	11g	R9	1/2	1.0 Megohm	9065-327

PIECE	REF.	DESCRIPTION	DWG.REF.
C.N.72527	12	OCTAL SOCKET	
C.N.72536	13	HANDSET	
C.N.45481	14	RETRACTILE CORD (3-cond.)	
263238	15	CASE COMPLETE with Studs Ref.15a	C-16891-6
264287	15a	STUD	8114-1091
263021	16	CHASSIS COMPLETE	C-16891-1
262720	17	COIL MOUNTING BOARD	8750-3303
263303	18	SPOOL COMPLETE	9971-498
	19	SCREW, NO.8-36 x 1/2" Flat Hd.Br. (N.P.)	
236217	20	WASHER	8078-732
240943	21	CORE	8101-405
139691	22	RUBBER BUSHING	8095-644
244804	23	WASHER	8078-732
263097	24	COIL (Primary 37-Ohms, First Secondary 63-Ohms, and Second Secondary 7-Ohms)	8133-623
263245	25	COIL (Primary 33-Ohms, First Secondary 25-Ohms, and Second Secondary 25-Ohms)	8133-624
263039	26	COIL (Inner Winding 48-Ohms, Outer Winding 60-Ohms)	8133-622
	27	MACHINE SCREW, NO.6-40 x 5/16" Rd.Hd.Br. (N.P.)	
	28	COTTER, 3/32" x 1" S. (Tin Pl.)	
262725	29	BRACKET	10914-1925

UNION SWITCH & SIGNAL CO.

PIECE	REF.	DESCRIPTION	DWG. REF.
	30	MACHINE SCREW, NO.8-36 x 3/8" Rd.Hd.Br. (N.P.) with No.8 S.Lock Washer (Tin Pl.)	
262721	31	INSULATION	8750-3304
232881	32	HOLLOW RIVET	12579-4
C.N.730000	33	LOCKING TERMINAL	
	34	MACHINE SCREW, NO.6-40 x 7/16" Rd.Hd.S. (Tin Pl.) with No.6 S.Lock Washer (Tin Pl.) and Nut Ref.34a	
48193	34a	NUT	8265-150
	35	MACHINE SCREW, NO.6-40 x 5/16" Rd.Hd.S. (Tin Pl.) with No.6 S.Lock Washer (Tin Pl.) and Nut Ref.34a	
	36	MACHINE SCREW, NO.6-40 x 3/16" Rd.Hd.S. (Tin Pl.) with No.6 S.Lock Washer (Tin Pl.)	
262722	37	BRACKET	10914-1918
262726	38	BRACKET	10914-1926
	39	MACHINE SCREW, NO.8-36 x 5/16" Rd.Hd.S. (Tin Pl.) with No.8 S.Lock Washer (Tin Pl.)	
C.N.71735	40	TERMINAL	
263081	41	STYLE "L" RELAY COMPLETE (1 Front - 3 Transfer Contacts, 2250-Ohm Coil)	B-12660-52
263080	42	COIL (2250-Ohms)	8133-382
152757	43	BACK STRAP	8162-226
161589	44	CORE	8101-304
175630	45	SPRING WASHER	7828-374
248405	46	COIL RETAINER	8124-279
185954	47	ARMATURE COMPLETE	8157-355
152756	48	ARMATURE STOP	11893-432
245081	49	TAG HOLDER	11893-1032
	50	MACHINE SCREW, NO.10-30 x 1/2" Fil.Hd.S. (Tin Pl.) for attaching Backstrap to Core	
168499	51	CONTACT STACK COMPLETE (1 Transfer Contact)	B-12660-4
168501	52	CONTACT STACK COMPLETE (1 Front and 1 Transfer Contact)	B-12660-4
245073	53	CONTACT BRACKET	10914-1644
	54	MACHINE SCREW, NO. 6-40 x 3/16 in. Fil.Hd.S. (Tin Pl.) for attaching Armature Stop or Contact Bracket to Backstrap	
152720	55	PLATE	7828-275

UNION SWITCH & SIGNAL CO.

PIECE	REF.	DESCRIPTION	DWG. REF.
152725	56	CONTACT SPRING COMPLETE, Front or Back	8385-2166
245099	57	CONTACT SPRING COMPLETE, Heel with insulated tip, molded type	8385-2790
152728	58	CONTACT SPRING COMPLETE, Curved Heel	8385-2167
152726	59	CONTACT SPRING STOP	8385-2166
174235	60	INSULATION (1/8" thick)	8750-2503
168557	61	BUSHING (61/64" long)	B-10266-1
160279	62	BUSHING (25/32" long)	B-10266-1
	63	MACHINE SCREW, NO.3-56 x 1-5/32" Fil.Hd.S. (N.P.)	
	64	MACHINE SCREW, NO.3-56 x 1" Fil.Hd.S. (N.P.)	
152721	65	COIL CONNECTOR	8064-663
262723	66	BRACKET	10914-1919
	67	MACHINE SCREW, NO.8-36 x 1/4" Rd.Hd.S. (Tin Pl.) with No.8 S.Lock Washer (Tin Pl.)	
	68	MACHINE SCREW, NO.10-30 x 5/16" Fil.Hd.S. (Tin Pl.) with No.10 Plain S.Lock Washer (M) (Tin Pl.)	
165822	69	GROMMET	8095-683
263357	70	CONDENSER CLIP	11893-1066
C.N.713209	71	MICROPHONE JACK COMPLETE with Washer and Nut	
263022	72	SPACER	8350-1041
	73	MACHINE SCREW Ref.73a with No.6 Lock Washer and Washer Ref.73b	
	73a	MACHINE SCREW, NO.6-40 x 1/4" Rd.Hd.Br. (N.P.) for Refs.9 and 73	
20686	73b	WASHER	7828-108
263338	74	SPACER	8072-911
	75	MACHINE SCREW, NO.6-40 x 7/8" Fil.Hd.Br. (N.P.) with Nut Ref.75a	
1505	75a	NUT	8109-11
	76	MACHINE SCREW, NO.6-40 x 1-1/8" Fil.Hd.Br. (N.P.) with No.6 S.Lock Washer (Tin Pl.) and 2 Nuts Ref.75a	
263026	77	TOP PLATE	C-16891-3
262724	78	BRACKET	10914-1924
263036	79	INSULATION	8750-3306
263037	80	CLAMP	9999-2339
C.N.72826	81	TOGGLE SWITCH (D.P.S.T.)	

UNION SWITCH & SIGNAL CO.

PIECE	REF.	DESCRIPTION	DWG. REF.
C.N.718014	82	TOGGLE SWITCH ON-OFF PLATE	
	83	MACHINE SCREW, NO.8-36 x 1-1/8" Rd.Hd.S. (Tin Pl.) with Std.No.8-36 Hex.S.Nut (Tin Pl.)	
263285	84	POWER SUPPLY CABLE COMPLETE with Plug Ref.84a.....	C-16891-7
C.N.70420	84a	PLUG for Ref.84	
263284	85	CARRIER CONNECTING CABLE COMPLETE with 2 Clips Ref.86, 2 Insulators Ref.87 and 2 Tags Ref.88.....	C-16891-7
C.N.70974	86	CLIP	
C.N.70975	87	INSULATOR (Order should specify color, red or black)	
166697	88	TAG (Stencilled LINE).....	8988-85
C.N.79819	89	DIAL PLATE	
C.N.71665	90	BAR KNOB	
263027	91	HANDLE COMPLETE.....	8311-147
C.N.75389	92	RUBBER BUMPER for Handle	
	93	SCREW, NO.6-40 x 7/16" Rd.Hd.S. (Tin Pl.) with Washer Ref.73b for fastening Rubber Bumper Ref.92 to Handle Ref.91	
263339	94	INDICATION PLATE.....	8225-892
	95	MACHINE SCREW, NO.10-32 x 3/4" Rd.Hd.S. (Tin Pl.) with Washer Ref. 95a and No.10 Plain S.Lock Washer (M) (Tin Pl.)	
73493	95a	WASHER.....	7826-78
263038	96	BRACKET.....	10914-1929
	97	MACHINE SCREW, NO.8-36 x 3/8" Rd.Hd.S. (Head painted) with No.8 S. Lock Washer (Tin Pl.) and No.8-36 Std.Hex.Nut (Tin Pl.)	
262865	98	NAME PLATE.....	8225-891
	99	DRIVE SCREW, NO.2 x 3/16" Rd.Hd.Hardened (Tin Pl.)	
	100	SCREW, NO.8 x 1/2" Rd.Hd.Hardened (Tin Pl.)	
239921	101	INSULATION.....	8750-1460

PLATE T-570-1

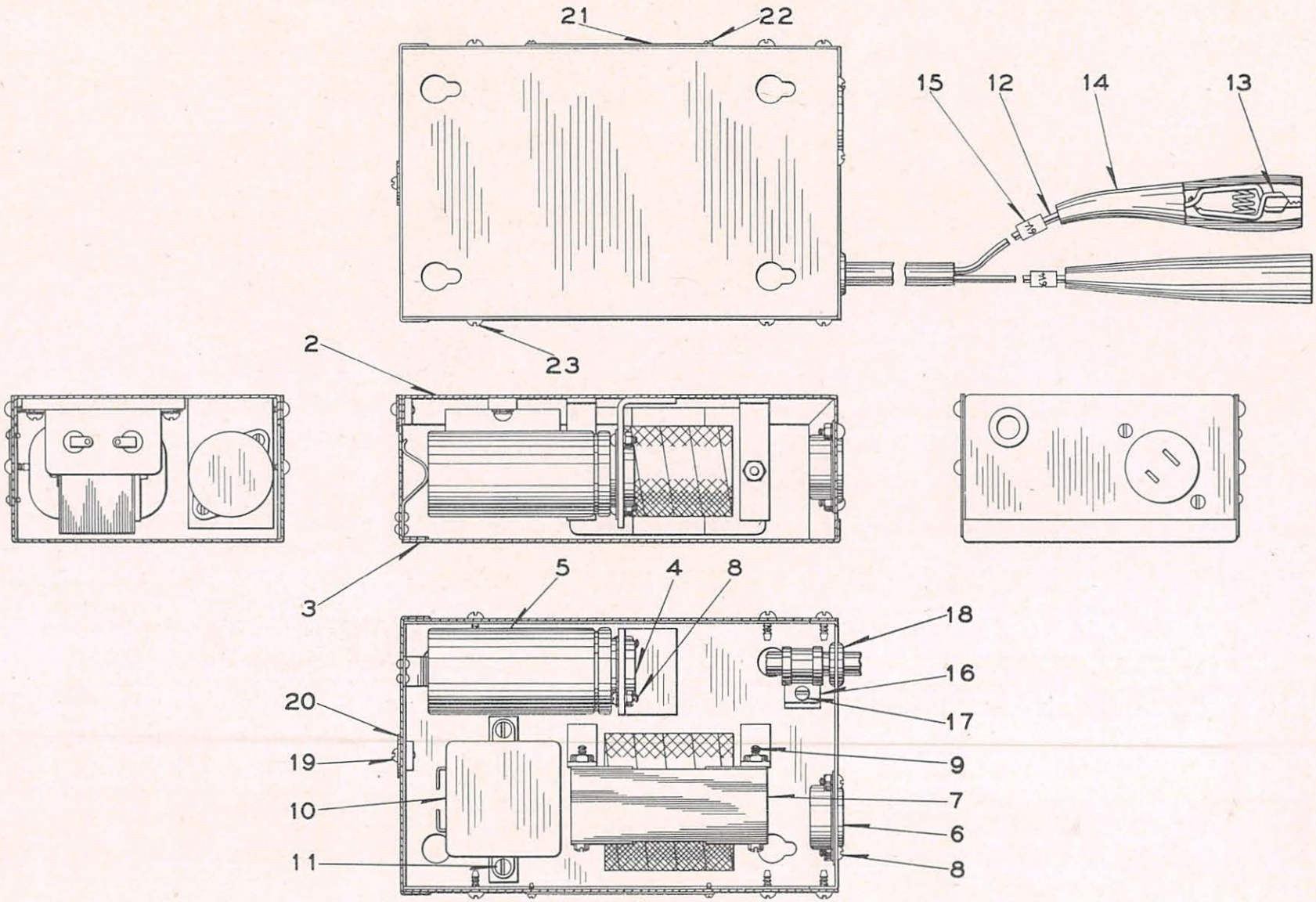

A
POWER PACK

7-15-47

UNION SWITCH & SIGNAL CO.

POWER PACK

Order by Plate, Piece, Reference and Abbreviated Description Given in Heavy Face Type Only

PIECE	REF.	DESCRIPTION	DWG. REF.
264162	A	POWER PACK COMPLETE (6 Volt D.C.)	C-16895-1
264741	2	CHASSIS COMPLETE	C-16899-1
264748	3	COVER	C-16899-2
C.N.72530	4	SOCKET (4-Prong)	
C.N.73417	5	VIBRATOR (6-Volt)	
C.N.72059	6	FEMALE RECEPTACLE	
264755	7	TRANSFORMER (6-Volt D.C.-100 cycles) COMPLETE	C-8605-37
	8	MACHINE SCREW, NO.6-40 x 5/16" Rd.Hd.S. (Tin Pl.) with No.6 S.Lock Washer (Tin Pl.) and Nut Ref.8a	
218836	8a	NUT	8265-319
	9	MACHINE SCREW, NO.8-36 x 1-3/4" Fil.Hd.S. (Tin Pl.) with No.8-36 Hex. S.Nut (Tin Pl.)	
C.N.700548	10	CONDENSER (2 Mfd.- 400 volts D.C.)	
	11	MACHINE SCREW, NO.8-36 x 1/4" Rd.Hd.S. (Tin Pl.) with No.8 S.Lock Washer (Tin Pl.)	
264752	12	POWER PACK CABLE COMPLETE with 2 Clips Ref.13, Insulator Ref.14, Insulator Ref.14a and 2 Tags Ref.15	C-16899-4
C.N.70974	13	CLIP	
C.N.70975	14	INSULATOR (Order should specify color, red or black)	
166805	15	TAG (Order should specify marking desired)	8988-85
C.N.700587	16	CABLE CLIP	
	17	MACHINE SCREW, NO.8-36 x 1/4" Fil.Hd.S. (Tin Pl.)	
C.N.75453	18	GROMMET	
	19	MACHINE SCREW, NO.8-36 x 5/16" Rd.Hd.S. (Tin Pl.)	
264756	20	WASHER	7826-334

UNION SWITCH & SIGNAL CO.

PIECE	REF.	DESCRIPTION	DWG. REF.
264747	21	NAME PLATE.....	8225-917
	22	SCREW, NO.2 x 3/16" Rd.Hd.Hardened (Tin Pl.)	
	23	SCREW, NO.8 x 3/8" Rd.Hd.Hardened (Tin Pl.)	

7-15-47

PLATE T-575

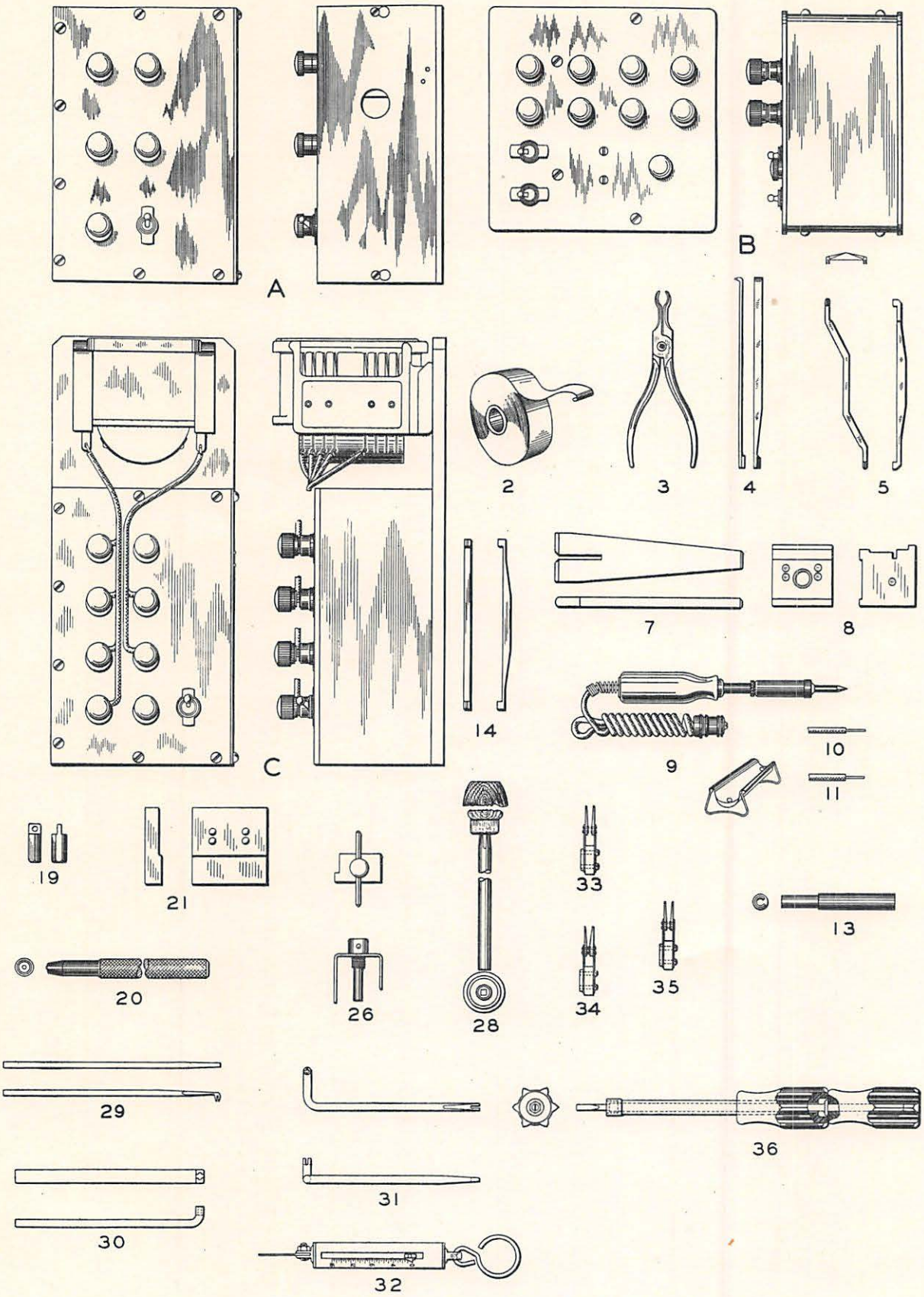

CYCLE RECORDERS, TOOLS AND SUPPLIES

10-20-54

UNION SWITCH & SIGNAL
DIVISION OF WESTINGHOUSE AIR BRAKE COMPANY

CYCLE RECORDER, TOOLS AND SUPPLIES FOR MAINTENANCE

Order by Plate, Piece, Reference and Abbreviated Description Given in Heavy Face Type Only

PIECE	REF.	DESCRIPTION	DWG. REF.
UN102949	A	DOUBLE PUNCH CYCLE RECORDER (When ordering state installation for which required)(Used with 16 Step 504 Time Code Systems)	C-9299-3
	B	SINGLE PUNCH CYCLE RECORDER (When ordering state installation for which required)(Used with 14 Step Time Code Systems).	C-9299-1
UN231678	C	DOUBLE PUNCH CYCLE RECORDER (When ordering state installation for which required)(Used with 16 Step 506 Time Code Systems)	C-9299-4
	2	ROLL SIZE "C" PAPER FOR CYCLE RECORDER (10 per package)	
UJ39826	3	PLIERS FOR REMOVING LAMP CAPS	
UJ39864	4	OFFSET SCREW DRIVER for removing Relay Armatures	
UM164375	5	BENDER (OFFSET) for Contact Springs	A-2586-15
UM273829	7	SWEDGE AND TWISTING TOOL for Adjusting Relay Armatures.	A-2586-95
UM164393	8	ANVIL for Adjusting Relay Armatures.	A-2586-78
UJ39069	9	3/8" ELECTRIC SOLDERING IRON WITH STAND	
	10	NO. 22 B. & S. GAUGE SOLID COPPER WIRE in color code for wiring control machine and control units (Orders should specify quantity and color desired).	
	11	NO. 20 B. & S. GAUGE FLEXIBLE COPPER WIRE in color code for wiring control machine and control units (Orders should specify quantity and color desired).	
	11a	NO. 22 B. & S. GAUGE FLEXIBLE COPPER WIRE in color code for wiring control machine and control units (Orders should specify quantity and color desired).	
UM106099	12	PUNCH (Used with Eyelet Rivets to attach Armature Bakelite to Relay Armatures (Not shown)	A-2586-34
UM177803	13	TOOL for removing Lamps	A-2586-21
UM172481	14	BENDER (STRAIGHT) for Contact Springs	A-2586-14
UJ62103	15	GRAM GAUGE W. E. 68B for measuring contact pressures (Not shown)	
UJ39892	16	BURNISHING TOOL W. E. 265C for cleaning contacts (Not shown)	

UNION SWITCH & SIGNAL
DIVISION OF WESTINGHOUSE AIR BRAKE COMPANY

PIECE	REF.	DESCRIPTION	DWG. REF.
	17	RESIN CORE SOLDER for making soldered connections (Do not use acid core or acid soldering paste or fluid). (Not shown)	
UM106100	18	ANVIL (Used with eyelet Rivets to attach Armature Bakelite to Relay Armatures) (Not shown)	A-2586-34
UM243028	19	SOCKET for adjusting Spring Tension of C. T. C. type plug Connectors	A-2586-60
UM244733	20	PUNCH. Used with Tubular Rivets to attach Armature Bakelite to Relay Armatures	A-2586-72
UO245029	20a	PUNCH AND ANVIL SET (Includes 1-20 and 1-21)	A-2586-72
UO255604	20b	REPAIR SET FOR RELAY ARMATURES (Includes 1-7, 1-8, and 1-20)	A-2586-72
UM244732	21	ANVIL. Used with Tubular Rivets to attach Armature Bakelite to Relay Armatures	A-2586-72
	23	6" LONG-NOSE PLIERS (Not shown)	
	24	5" DIAGONAL CUTTING PLIERS (Not shown)	
	25	3" SCREW DRIVER (Not shown)	
UN259590	26	KEY AND CLAMP for compressing Spring on Push Turn Lever	A-2586-82
UM170241	28	KEY for Push Turn Lever assembly	8802-96
UM282051	29	BENDER (Right Hand) for Contact Strips	A-2586-106
UM262634	30	BENDER for Thermal Cutout	A-2586-84
UM243059	31	BENDER for KN and KP Relays	A-2586-68
UN320728	32	SPRING TESTER for LP-53, LP-58 and LP-70 Relay Bases	A-2586-39
UN243000	33	ARMATURE POSITIONING GAUGE for Biased KP Relay (2 Required) .	A-2586-65
UN243001	34	ARMATURE POSITIONING GAUGE for Stick KP Relay with 4 Transfer Contacts (2 Required)	A-2586-65
UN243002	35	ARMATURE POSITIONING GAUGE for Stick KP Relay with 2N and 2R Contacts (2 Required)	A-2586-65
UJ39720	36	TUNING WRENCH for Carrier Equipment	A-2586-105

PLATE T-581

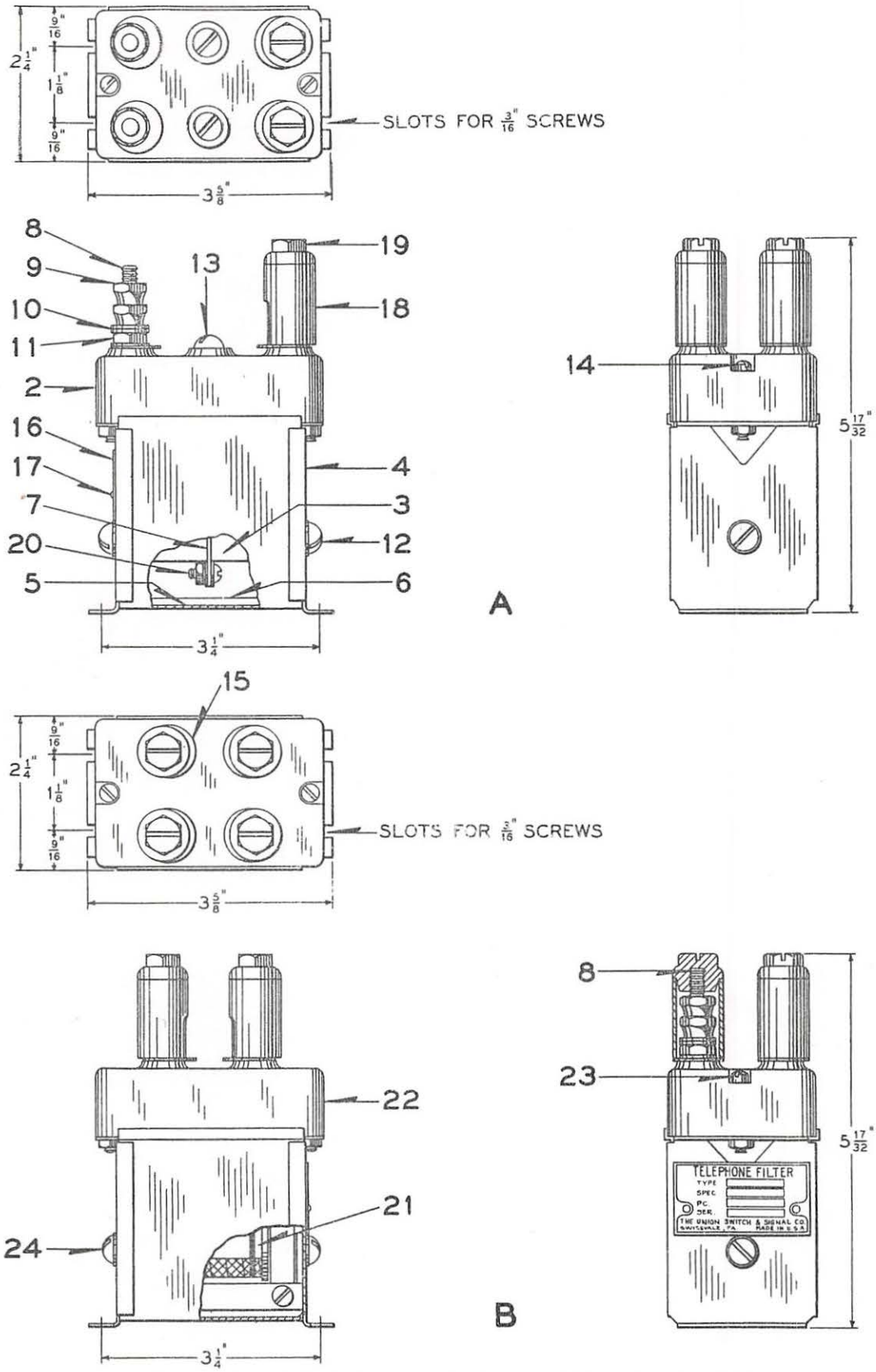

3-30-

TELEPHONE FILTERS AND REACTORS

UNION SWITCH & SIGNAL CO.

TELEPHONE FILTERS AND REACTOR

Order by Plate, Piece, Reference and Abbreviated Description Given in Heavy Face Type Only

PIECE	REF.	DESCRIPTION	DWG. REF.
240128	A	TELEPHONE FILTER COMPLETE. (Using two 0.5 Mfd. Condensers)...	C-16743-31
231963	Aa	TELEPHONE FILTER COMPLETE. (Using two 0.25 Mfd. Condensers)..	C-16743-12
234396	B	HIGH FREQUENCY REACTOR for use with Telephone Filter.....	C-8025-42
107726	2	TOP PLATE.....	9968-1248
C.N.700578	3	CONDENSER, 0.5 Mfd. 1000 Volt D.C. for Ref. A	
C.N.70909	3a	CONDENSER, 0.25 Mfd. 1000 Volt D.C. for Ref. Aa	
161294	4	END PLATE.....	C-9134-29
160926	5	COVER.....	C-9134-29
232363	6	COVER CLAMP.....	10914-1378
224082	7	CONDENSER MOUNTING BRACKET for Ref. A.....	10914-1541
232362	7a	CONDENSER MOUNTING BRACKET for Ref. Aa.....	10914-1377
	8	TERMINAL POST WITH NUTS AND WASHERS (Inc. 1-8a, 2-9, 3-10, and 1-11).....	12451
162365	8a	TERMINAL POST ONLY.....	8094-2248
29101	9	NUT.....	8109-193
29102	10	WASHER.....	7828-139
29103	11	NUT.....	8109-194
	12	MACHINE SCREW, No. 14-24 x 1/4 in. Rd. Hd. S. (Tin Pl.) with Washer Ref. 12a. For Ref. A	
84	12a	WASHER.....	7828-6
	12b	MACHINE SCREW, No. 14-24 x 3/8 in. Rd. Hd. S. (Tin Pl.) with Washer Ref. 12a. For Ref. Aa	
	13	MACHINE SCREW, No. 14-24 x 5/8 in. Rd. Hd. S. (Tin Pl.). For Ref. A	
	13a	MACHINE SCREW, No. 14-24 x 5/8 in. Rd. Hd. S. (Tin Pl.) with Nut Ref. 13b for Ref. Aa	
410442	13b	NUT	

UNION SWITCH & SIGNAL CO.

PIECE	REF.	DESCRIPTION	DWG. REF.
	14	MACHINE SCREW, No. 8-36 x 1 in. Fil. Hd. S. (Tin Pl.) with Hex. Nut (Tin Pl.)	
142777	15	TAG (Orders should specify marking desired).....	8988-75
232321	16	NAME PLATE.....	8225-615
	17	DRIVE SCREW, No. 0 x 3/16 in. Rd. Hd. (Tin Pl.)	
172423	18	INSULATING BUSHING.....	8095-687
170033	19	INSULATING NUT.....	12770-26
	20	MACHINE SCREW, No. 8-36 x 3/8 in. Rd. Hd. S. (Tin Pl.) with No. 8 S. Lock Washer (Int. Teeth) (Tin Pl.) and Nut Ref. 20a. For Ref. A	
94344	20a	NUT.....	8265-70
232364	20b	EYELET. For Ref. Aa.....	12579-4
234395	21	COIL AND LAMINATIONS COMPLETE.....	C-8025-43
186353	22	TOP PLATE.....	9968-950
	23	MACHINE SCREW, No. 6-40 x 1 in. Fil. Hd. S. (Tin Pl.) with Nut Ref. 23a	
48193	23a	NUT.....	8265-150
	24	MACHINE SCREW, No. 14-24 x 3/16 in. Rd. Hd. S. (Tin Pl.) with Washer Ref. 12a	

3-30-44

PLATE T-585

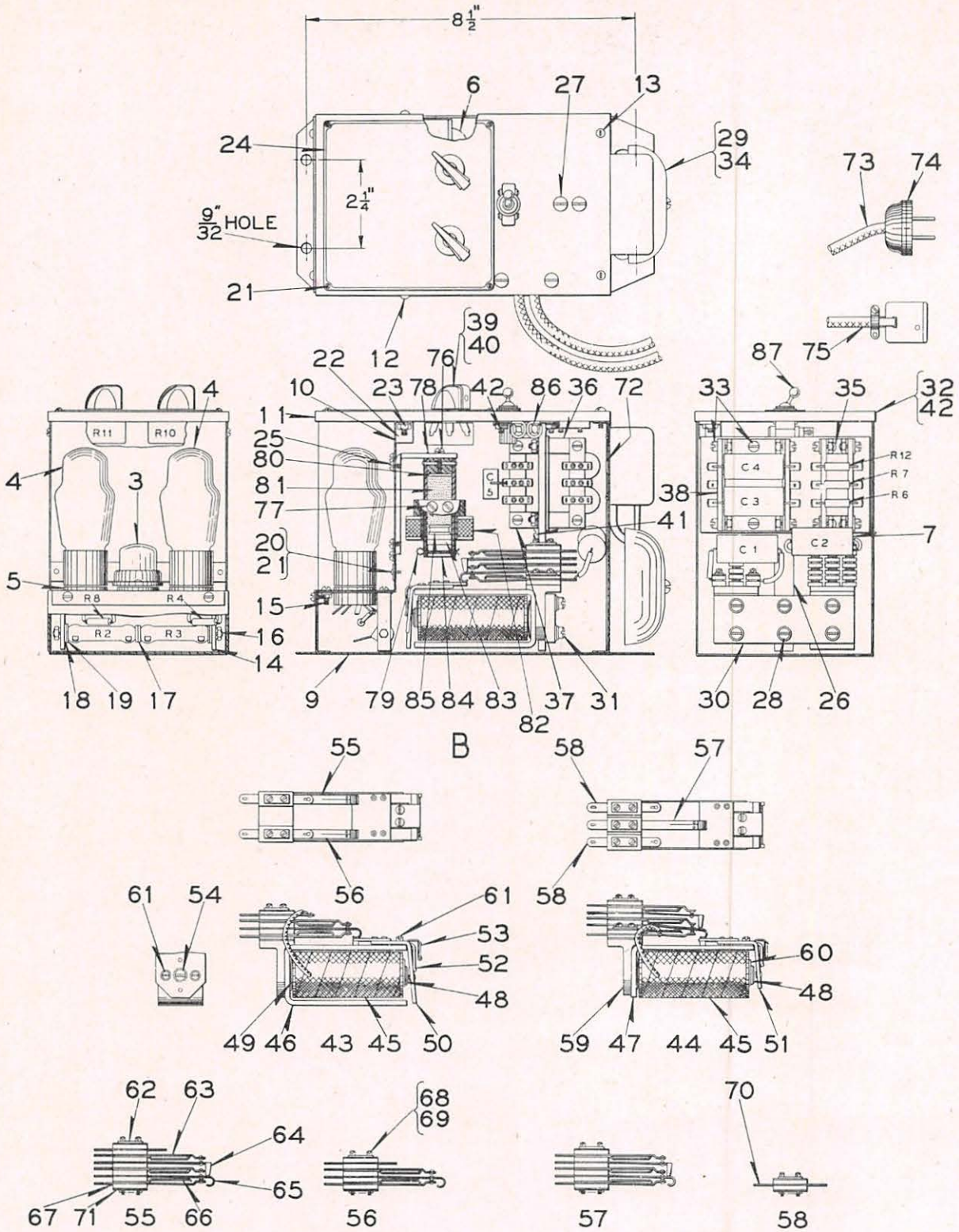

7-15-47

TELEPHONE CALL DETECTOR

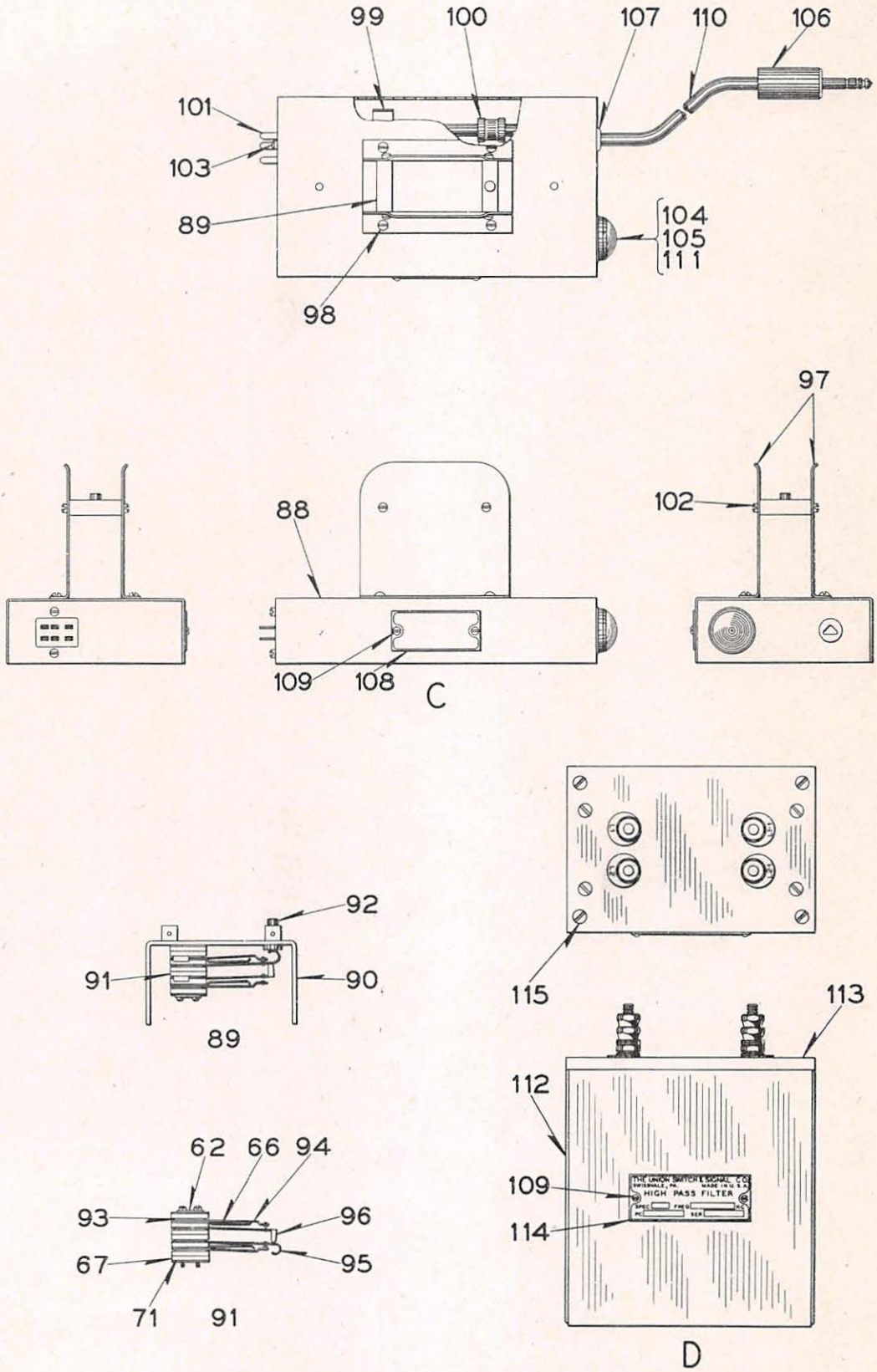

7-15-47

HANDSET HOOK AND HIGH PASS FILTER

UNION SWITCH & SIGNAL CO.

CALL DETECTOR, HANDSET HOOK AND HIGH PASS FILTER

Order by Plate, Piece, Reference and Abbreviated Description Given in Heavy Face Type Only

PIECE	REF.	DESCRIPTION	DWG. REF.
253800	A	TELEPHONE CALL DETECTOR AND HANDSET HOOK COMPLETE (Inc. 1-B, 1-C and 2-2).....	C-16891-12
253600	B	TELEPHONE CALL DETECTOR COMPLETE (90-130V-50/60 Cycles)...	C-16778-8
253700	C	HANDSET HOOK COMPLETE.....	C-16891-12
266796	D	HIGH PASS FILTER COMPLETE (33KC and up).....	C-16743-61
	2	MACHINE SCREW, NO.8-36 x 5/8" Rd.Hd.S. (Tin Pl.) (Used for fastening Handset Hook to Portable Carrier Telephone) (Not shown)	
C.N.73277	3	TUBE (Radio Type 6H6)	
C.N.73293	4	TUBE (Type 2050)	
C.N.72527	5	SOCKET (Type MP1-8)	
252912	6	TRANSFORMER COMPLETE.....	C-8025-55

CONDENSER

COMMODITY NO.	REF.	LEGEND	MFD.	DWG.REF.
70920	7	C1-C2-C3	4	
700629	7a	C4	16	
700614	7b	C5	.002	

RESISTOR

PIECE	REF.	LEGEND	RESISTANCE OHMS	DWG.REF.
239278	8	R2-R3	1,000	9065-330
239217	8a	R4	1 Megohm	9065-327
239206	8b	R6	30,000	9065-327
239212	8c	R7	0.15 Megohm	9065-327
239217	8d	R8	1 Megohm	9065-327
240418	8e	R10	250,000	9065-337
240417	8f	R11	0.2 Megohm	9065-337
239209	8g	R12	75,000	9065-327

UNION SWITCH & SIGNAL CO.

PIECE	REF	DESCRIPTION	DWG. REF
263875	9	CASE	C-16779-14
252910	10	CHASSIS SUPPORT	C-16779-12
263871	11	TOP PLATE	C-16779-13
	12	SCREW, NO.8 x 3/8" Rd.Hd.Hardened (Tin Pl.)	
	13	SCREW, NO.8 x 1/2" Rd.Hd.Hardened (Tin Pl.)	
252937	14	BRACKET	10914-1769
	15	MACHINE SCREW, NO.6-40 x 3/8" Rd.Hd.S. (Hd.Painted) with No.6 Plain S.Lock Washer (M)(Tin Pl.) and Nut Ref.15a	
218836	15a	NUT	8265-319
	16	STUD Ref.16a with 2-No.6 Plain S.Lock Washers (M)(Tin Pl.) and 2 Nuts Ref.15a	
252923	16a	STUD ONLY	8114-1059
154851	17	WASHER	8078-931
217250	18	WASHER	8078-253
226953	19	WASHER	8078-1655
252924	20	NAME PLATE	8225-796
	21	SCREW, NO.2 x 3/16" Rd.Hd.Hardened (Tin Pl.)	
248232	22	BRACKET	10914-1682
	23	MACHINE SCREW, NO.8-36 x 5/8" Flat Hd.S. (Tin Pl.) with No.8 Plain S. Lock Washer (M)(Tin Pl.) and No.8 Std. S.Hex.Nut (Tin Pl.)	
255592	24	ESCUTCHEON PLATE	8225-816
	25	MACHINE SCREW, NO.8-36 x 1/4" Rd.Hd.S. (Hd.Painted) with No.8 Plain S.Lock Washer (M) (Outer surface painted)	
263872	26	BRACKET	10914-1946
	27	MACHINE SCREW, NO.10-32 x 1/2" Flat Hd.S. (Tin Pl.)	
	28	MACHINE SCREW, NO.10-32 x 3/4" Flat Hd.S. with No.10 Plain S.Lock Washer (M) (Tin Pl.) and No.10-32 Std.S.Hex.Nut (Tin Pl.)	
	29	MACHINE SCREW, NO.6-40 x 7/16" Rd.Hd.S. (Tin Pl.) with No.6 S.Lock Washer (Internal Teeth) (Tin Pl.) and Nut Ref.15a (For fastening Bell to case)	
252930	30	RELAY SUPPORT	8750-3204
	31	MACHINE SCREW, NO.10-30 x 9/16" Fil.Hd.S. (Tin Pl.) with No.10 Plain S.Lock Washer (M) (Tin Pl.) and Washer Ref.31a	
73129	31a	WASHER	7826-180
252932	32	TERMINAL BOARD SUPPORT	9999-2181

UNION SWITCH & SIGNAL CO.

PIECE	REF.	DESCRIPTION	DWG. REF.
	33	MACHINE SCREW, NO.8-36 x 3/8" Fil.Hd.S. (Tin Pl.) with No.8 Plain S. Lock Washer (M) (Tin Pl.) and No.8-36 Std.S.Hex.Nut (Tin Pl.)	
C.N.70160	34	BELL	
	35	MACHINE SCREW, NO.8-36 x 1/2" Fil.Hd.S. (Tin Pl.) with No.8 Plain S. Lock Washer (M) (Tin Pl.) and No.8-36 Std.S.Hex.Nut (Tin Pl.)	
232985	36	BRACKET	10914-1381
252935	37	BRACKET	10914-1767
248223	38	TERMINAL STRIP COMPLETE	8750-3181
C.N.71665	39	KNOB	
252624	40	NUT (For fastening Refs.8e and 8f to Top Plate)	8265-389
C.N.730005	41	TERMINAL LUG	
	42	MACHINE SCREW, NO.8-36 x 1/2" Flat Hd.S. (Tin Pl.) with No.8 Plain S. Lock Washer (M) (Tin Pl.) and No.8-36 Std.S.Hex.Nut (Tin Pl.)	
245841	43	STYLE "L" RELAY COMPLETE (1 Front - 2 Transfer Contacts, 750-Ohm Coil)	B-12660-46
264925	44	STYLE "L" RELAY COMPLETE (1 Front - 1 Transfer Contact, 750-Ohm Coil)	B-12660-52
163282	45	COIL (750-Ohms)	8133-382
155364	46	BACK STRAP	8162-228
152757	47	BACK STRAP	8162-226
161589	48	CORE	8101-304
175630	49	SPRING WASHER	7828-374
156361	50	ARMATURE COMPLETE	8157-363
185954	51	ARMATURE COMPLETE	8157-355
152756	52	ARMATURE STOP	11893-432
245081	53	TAG HOLDER	11893-1032
	54	MACHINE SCREW, NO.10-30 x 1/2" Fil.Hd.S. (Tin Pl.) for attaching Backstrap to Core	
175090	55	CONTACT STACK COMPLETE (1 Front - 1 Transfer Contact and 1 Coil Connector)	B-12660-4
168499	56	CONTACT STACK COMPLETE (1 Transfer Contact and 1 Coil Connector)	B-12660-4
168501	57	CONTACT STACK COMPLETE (1 Front - 1 Transfer Contact)	B-12660-4
190197	58	CONTACT STACK COMPLETE (1 Coil Connector)	B-12660-4
245073	59	CONTACT BRACKET	10914-1644
248405	60	COIL RETAINER	8124-279

UNION SWITCH & SIGNAL CO.

PIECE	REF.	DESCRIPTION	DWG. REF.
	61	MACHINE SCREW, NO.6-40 x 3/16" Fil.Hd.S. (Tin Pl.) for attaching Armature Stop or Contact Bracket to Backstrap	
152720	62	PLATE	7828-275
152725	63	CONTACT SPRING COMPLETE, Front or Back	8385-2166
245099	64	CONTACT SPRING COMPLETE, Heel with insulated tip, molded type	8385-2790
152728	65	CONTACT SPRING COMPLETE, Curved Heel	8385-2167
152726	66	CONTACT SPRING STOP	8385-2166
174235	67	INSULATION (1/8" thick)	8750-2503
160279	68	BUSHING (25/32" long) for Ref.56	B-10266-1
160299	68a	BUSHING (1-3/32" long) for Refs.55 and 91	B-10266-1
168557	68b	BUSHING (61/64" long) for Ref.57	B-10266-1
152731	68c	BUSHING (19/64" long) for Ref.58	B-10266-1
	69	MACHINE SCREW, NO.3-56 x 1" Fil.Hd.S. (N.P.) for Ref.56	
	69a	MACHINE SCREW, NO.3-56 x 1-5/16" Fil.Hd.S. (N.P.) for Ref.55	
	69b	MACHINE SCREW, NO.3-56 x 1-5/32" Fil.Hd.S. (N.P.) for Ref.57	
	69c	MACHINE SCREW, NO.3-56 x 1/2" Fil.Hd.S. (N.P.) for Ref.58	
	69d	MACHINE SCREW, NO.3-56 x 1-1/4" Fil.Hd.S. (N.P.) for Ref.91	
152721	70	COIL CONNECTOR	8064-663
239921	71	INSULATION	8750-1460
C.N.75416	72	GROMMET	
263960	73	POWER SUPPLY CABLE COMPLETE with Plug Ref.74	C-16891-7
C.N.70420	74	PLUG for Ref.73	
263961	75	CONNECTING CABLE COMPLETE with Socket Ref.75a	C-16891-13
	75a	SOCKET (6-Way) for Ref.75	
	76	MACHINE SCREW, NO.8-36 x 1/2" Rd.Hd.Br. (N.P.) with No.8 S.Lock Washer (Tin Pl.)	
	77	MACHINE SCREW, NO.6-40 x 5/16" Rd.Hd.Br. (N.P.)	
264201	78	BRACKET	10914-1947
	79	COTTER, 3/32" x 1" S. (Tin Pl.)	
236217	80	WASHER	8078-732
240943	81	CORE	8101-405
244504	82	COIL (Primary 39-Ohms, Secondary 95-Ohms)	8133-594
~~244504~~x	~~83~~x	~~WASHER~~	~~8078-732~~
~~263303~~	~~84~~x	~~SPOOL COMPLETE~~	~~9271-422~~

UNION SWITCH & SIGNAL CO.

PIECE	REF.	DESCRIPTION	DWG. REF.
244804	83	WASHER	8078-732
263303	84	SPOOL COMPLETE	9971-498
139691	85	RUBBER BUSHING	8095-644
C.N.700586	86	CABLE CLIP	
C.N.72777	87	TOGGLE SWITCH (D.P.S.T.)	
263863	88	BASE	C-16891-10
263870	89	HANDSET REST COMPLETE with Contact Section	C-16891-11
263868	90	FRAME COMPLETE	C-16891-11
263869	91	CONTACT SECTION COMPLETE	B-12660-51
263867	92	PUSH ROD	8095-790
166018	93	WIRE TERMINAL	8244-142
221765	94	CONTACT SPRING COMPLETE, Front or Back	8385-2704
221763	95	CONTACT SPRING COMPLETE, Curved Heel	8385-2703
245831	96	CONTACT SPRING COMPLETE, Heel with insulated tip, molded type	8385-2166
263866	97	BRACKET	11893-1068
	98	MACHINE SCREW, NO.8-36 x 3/8" Rd.Hd.S. (Tin Pl.) (Hd.painted) with No.8 S.Lock Washer (Internal Teeth) (Tin Pl.) and No.8-36 Std.S.Hex.Nut (Tin Pl.)	
150794	99	CLIP	11893-419
C.N.700586	100	CABLE CLIP	
C.N.718017	101	PLUG, 6-Way	
	102	MACHINE SCREW, NO.6-40 x 1/4" Fil.Hd.S. (Tin Pl.) (Hd.Painted)	
	103	MACHINE SCREW, NO.6-40 x 1/4" Fil.Hd.S. (Tin Pl.) (Hd.Painted) with No.6 S.Lock Washer (Internal Teeth) (Tin Pl.) and Nut Ref.15a	
C.N.714027	104	PILOT LIGHT	
C.N.71533	105	LAMP	
C.N.718031	106	MICROPHONE, 3-Way	
165822	107	GROMMET	8095-683
136680	108	NAME PLATE	8225-268
	109	SCREW, NO.4 x 3/16" Rd.Hd.Hardened (Tin Pl.)	
C.N.45517	110	RUBBER COVERED SHIELDED CABLE, 3-Conductor (14" long)	
C.N.70000	111	ADAPTER	
268374	112	BOX	C-16745-45

UNION SWITCH & SIGNAL CO.

PIECE	REF.	DESCRIPTION	DWG. REF.
268386	113	FILTER UNIT COMPLETE.....	C-16743-60
268387	114	NAME PLATE.....	8225-956
	115	MACHINE SCREW, NO.8-36 x 5/8" Flat Hd.S. (Tin Pl.)	

7-15-47

PLATE T-590

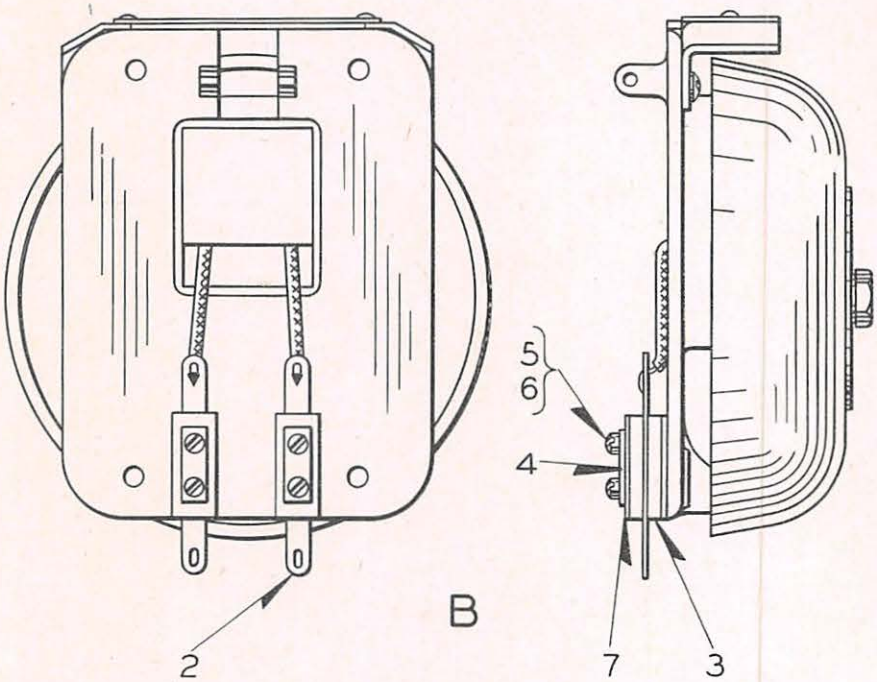

B

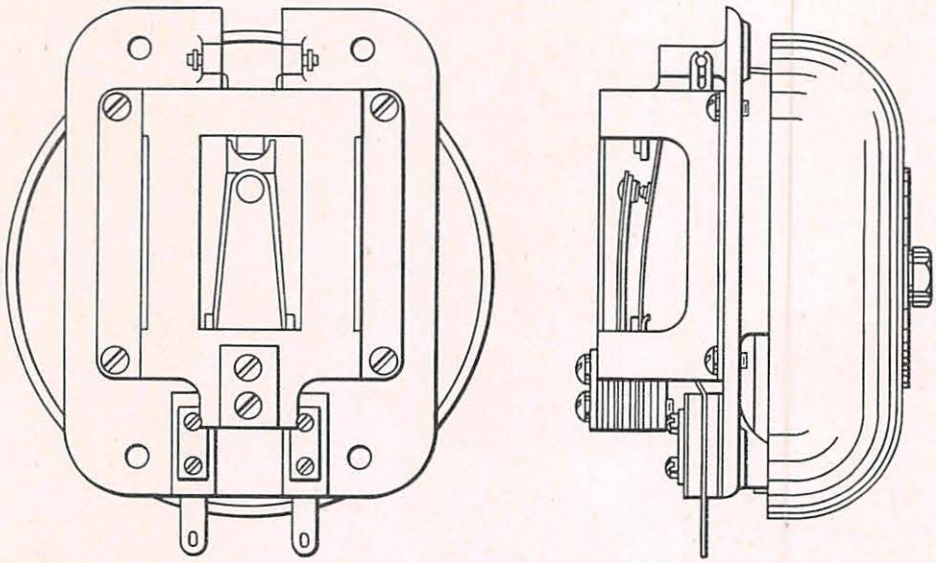

C

7-15-47

BELLS

UNION SWITCH & SIGNAL CO.

BELLS

When ordering bells for replacement designate piece number as shown on name plate and/or installation for which required.

If not for replacement give voltage (AC or DC).

Order by Plate, Piece, Reference and Abbreviated Description Given in Heavy Face Type Only

PIECE	REF.	DESCRIPTION	DWG. REF.
	B	SINGLE STROKE BELL, TYPE DS4, Standard Tone, for DC Operation....	B-12680-1
	Ba	SINGLE STROKE BELL, TYPE DS4-2, Soft Tone, for D.C. Operation.....	B-12680-1
	Bb	SINGLE STROKE BELL, TYPE AS4, Standard Tone, for A.C. Operation...	B-12680-1
	Bc	SINGLE STROKE BELL, TYPE AS4-2, Soft Tone, for A.C. Operation.....	B-12680-1
	* Bd	SINGLE STROKE BELL, TYPE BX4-21, Standard Tone, for D.C.Operation	B-12680-1
	* Be	SINGLE STROKE BELL, TYPE BX4-22, Soft Tone, for D.C. Operation....	B-12680-1
		* Types BX4-21 and BX4-22 Bells have short plunger stroke and are used in conjunction with an electrolytic condenser without a bell ringing relay.	
	C	VIBRATING BELL, TYPE DV4, for D.C. Operation.....	B-12680-4
	Ca	VIBRATING BELL, TYPE V4, for A.C. Operation.....	B-12680-4
152721	2	COIL CONNECTOR.....	8064-663
174235	3	INSULATION (1/8" thick).....	8750-2503
152720	4	WASHER.....	7828-275
	5	MACHINE SCREW, NO.3-56 x 1/2" Fil.Hd.S. (N.P.)	
152731	6	EXTRUDED PLASTIC BUSHING, length 19/64".....	B-10266-1
239921	7	INSULATION (1/64" thick).....	8750-1460

SECTION

W

CODED TRACK CIRCUIT CONTROL SYSTEM

AXED
MAY 16 2006

Union Switch & Signal Co.
Swissvale, Pa.

1381

CATALOG SECTION

"W"

CODED TRACK CIRCUIT CONTROL SYSTEM

TABLE OF CONTENTS

	Plate
TYPE "M" CODE TRANSMITTER RELAYS (3 and 4-Cam)	W-5
CODE TRANSMITTER (Oscillating Type)	W-7
STYLE "DM" CODE TRANSMITTER (75-Code)(Sheet Metal Mounting Bracket)	W-8
STYLE "DM" CODE TRANSMITTER (75-Code)(Cast Mounting Bracket)	W-8A
STYLE "DM" CODE TRANSMITTER (120 and 180 Code)	W-9
STYLE "DM" CODE TRANSMITTER (120 and 180 Code)	W-9A
TOP PLATES AND FITTINGS FOR "DM" CODE TRANSMITTERS (120 and 180 Code)	W-9B
MOTOR, GEAR AND CAM SHAFTS, GEAR AND PINION SHAFTS FOR STYLE "M" CODE TRANSMITTER RELAYS	W-10
CONTACT COMBINATIONS FOR STYLE "M" CODE TRANSMITTER RELAYS	W-15
STYLE "F-10" TUNED ALTERNATOR	W-16
TUNED ALTERNATOR REPEATER	W-17
STYLE "CDM" CODE CONVERTER	W-18
STYLE "CD" CODE FOLLOWING RELAY	~~W-20~~
STYLE "CD" CODE FOLLOWING RELAY (With Spring Hinged Armature)	~~W-21~~
STYLE "CD" CODE FOLLOWING RELAY (With Spring Hinged Armature)	W-22
STYLE "CND" NEUTRAL CODE FOLLOWING LINE RELAY	W-24
STYLE "CDP" CODE FOLLOWING RELAY	W-24B
"DN-11", "DN-11C" AND "DN-11L" FOUR POINT NEUTRAL RELAYS	W-25A
"DN-18", "DN-18C", "DN-19" AND "DN-19C FOUR POINT NEUTRAL RELAYS	W-25B
"DN-11P" FOUR POINT POWER TRANSFER RELAY	W-25E
"DN-11", "DN-11C", "DN-18", "DN-18C" AND "DN-19C" SIX POINT NEUTRAL RELAYS	W-30
"DN-11" EIGHT POINT NEUTRAL RELAY	W-32

CODED TRACK CIRCUIT CONTROL SYSTEM

Table of Contents (cont'd.)

	Plate
CONTACT SPRINGS AND TERMINAL POSTS	W-35
"DN-22", "DN-22A", "DN-22C" AND "DN-22L" NEUTRAL RELAYS	W-40
STYLE "DN-22P" POWER TRANSFER RELAY	W-41
STYLES "DP-20" AND "DP-21" RETAINED NEUTRAL POLARIZED RELAYS	W-42A
STYLE "P-4" RELAY (1 POINT)	W-44
STYLE "P-4" RELAY (1 POINT)	W-44-1 44-2
STYLE "P-4" RELAY (2 POINT)	W-44A
STYLE "P-10" RELAY (2 POINT)	W-44E
STYLES "W-7", "W-10" AND "W-11" TRANSFORMERS	W-45
STYLES "W-5" AND "W-5A" TRANSFORMERS	W-45A
STYLES "W-20" AND "W-22" TRANSFORMERS	W-45B
STYLES "N-3" AND "W-2" TRANSFORMERS	W-46
STYLE "B-10" RESONANT UNIT	W-50
60 CYCLE RESONANT UNIT	W-51
DECODING UNIT	W-53
CODE DETECTING UNIT	W-54
STYLES "Y-10" AND "Y-20" DECODING UNITS	W-55
"RQ-5" AND "RQ-8" RECTIFIERS	W-57
"RQ-9" RECTIFIER	W-58
"RQ-12" RECTIFIER	W-59
"RQ-206" AND "RQ-406" RECTIFIERS	W-60A
"R3Q-208" AND "R3Q-408" RECTIFIERS	W-65E
"RN" AND "RNR" RECTIFIERS	W-66
"R3N-116" RECITIFER	W-66A
"RT-42" RECTIFIER	W-67
"R3T-104" AND "R3T-204" RECTIFIERS	W-67E

CODED TRACK CIRCUIT CONTROL SYSTEM

Table of Contents (cont'd.)

	Plate
"RX-42" RECTIFIER	W-68
"RX-82" RECTIFIER	W-68C
"R3X-104", "R3X-204" AND "R3X-208" RECTIFIERS	W-68H
CONDENSERS AND ARC SUPPRESSORS	W-70A
REACTORS, CODE REACTOR COIL AND RESISTORS	W-70B
PLUG COUPLERS	W-75
PLUG COUPLERS	W-75A
METERS AND TEST EQUIPMENT	W-77
TIMING UNIT	W-80 W-80 A

11-25-46

UNION SWITCH & SIGNAL CO.

CODED TRACK CIRCUIT CONTROL SYSTEM
STYLE "M" CODE TRANSMITTER RELAY
THREE AND FOUR CAM

Order by Plate, Piece, Reference and Abbreviated Description

STYLE "M" FOUR CAM CODE TRANSMITTER RELAY WITH EIGHT FRONT AND EIGHT BACK CONTACTS - DWG. C-9141-4.								
PIECE	REF.	CODE	VOLTS	CYCLES	CONTACT ASSEMBLY Plate W-15 REF.	MOTOR Plate W-10 REF.	GEAR & CAM SHAFT Plate W-10 REF.	GEAR & PINION SHAFT Plate W-10 REF.
193590	A	180-120-120-75	110	100	3	2	4a	5
193589	Aa	180-180- 75-75	110	100	3	2	4	5
206052	Ag	180-120- 75-75	110	100	3	2	4b	5
224491	Ah	180-120- 75-75	110	62	3	2a	4b	5c
230495	An	240-180-120-75	110	60	3a	2a	4c	5b
STYLE "M" THREE CAM CODE TRANSMITTER RELAY WITH SIX FRONT AND SIX BACK CONTACTS - DWG. C-9141-2.								
193584	Ab	180- 75-75	110	100	2	2	3b	5
189796	Ac	180-120-75	110	100	2	2	3d	5
193582	Ad	180-180-75	110	100	2	2	3	5
193583	Ae	120-120-120	110	100	2	2	3a	5
193585	Af	180-120-120	110	100	2	2	3c	5
224910	Aj	180-120-75	110	100	2a	2	3d	5
208421	Ak	180-120-75	110	60	2	2a	3e	5b
224486	Am	75-75M	110	62	2	2a	3f	5a
229290	Ap	180-120-75	110	100	2b	2	3d	5
230381	Aq	180-120-75	110	91-2/3	2	2b	3d	5d
230382	Ar	180-180-75	110	91-2/3	2	2b	3	5d
230383	As	120-120-120	110	60	2	2a	3g	5b
230384	At	180-120-120	110	60	2c	2a	3h	5b
230385	Au	120-120-120	110	91-2/3	2	2b	3a	5d

UNION SWITCH & SIGNAL CO.

PIECE	REF.	DESCRIPTION	DWG. REF.
163287	2	CASE for Four Cam Code Transmitter Relay	C-9142-14
140572	2a	CASE for Three Cam Code Transmitter Relay	C-9142-2
253	3	DOWEL PIN	8097-21
139503	4	DOOR for Three and Four Cam Code Transmitter Relay	C-9142-3
163427	5	DOOR for Four Cam Code Transmitter Relay (Used previous to 9/14/37, for use with large glass shield Ref. 6) Not shown	C-9142-15
139504	5a	DOOR for Three Cam Code Transmitter Relay (Used previous to 9/14/37, for use with large glass shield Ref. 6a) Not shown	C-9142-3
163489	6	SHIELD COMPLETE with Gasket for Four Cam Code Transmitter Relay Size of glass shield 6-7/8 inches x 6-1/4 inches; for use with Door Ref.5 Not shown	8163-282
139545	6a	SHIELD COMPLETE with Gasket for Three Cam Code Transmitter Relay, Size of glass shield 5-3/4 inches x 6-1/4 inches; for use with Door Ref. 5a. Not shown	8163-282
139546	7	SHIELD COMPLETE with Gasket for Three and Four Code Transmitter Relay	8163-282
163273	8	BASE COMPLETE with Bearing Caps and Ventilators for Four Cam Code Transmitter Relay	C-9142-13
139506	8a	BASE COMPLETE with Bearing Caps and Ventilators for Three Cam Code Transmitter Relay	C-9142-4
	9	MACHINE SCREW, No. 14-24 x 1 inch Fil. Hd. S. (N.P.)	
	10	LOCK WASHER, 1/4 inch Pl. S. (3/32 inch x 1/16 inch) (N.P.)	
150338	11	BEARING CAP for all references except Ak, Am, An, As and At.	8072-692
164801	11a	BEARING CAP for Refs. Ak, Am, An, As and At.	8072-692
CN 66114	12	BALL BEARING	
109922	13	NAME PLATE	8225-560
122932	14	STRAP	11893-200
	15	MACHINE SCREW, No. 6-40 x 1/2 inch Flat Hd. S. (N.P.)	
	16	MACHINE SCREW, No. 10-30 x 5/8 inch Flat Hd. S. (Tin Pl.)	
182808	17	BEARING SHIELD	11893-680
	18	PLATE WASHER, 3/16 inch S. (1/4 inch x 9/16 inch) (Tin Pl.)	
182809	19	WASHER	7828-176
182810	20	FELT WASHER	8078-1502
	21	TERMINAL POST COMPLETE with Nuts and Washers (Inc. 1-21a, 2-22, 2-23, 1-24, 1-25 and 1-26)	12451-
130200	21a	TERMINAL POST ONLY, for Ref. 21	8094-1192

UNION SWITCH & SIGNAL CO.

PIECE	REF.	DESCRIPTION	DWG. REF.
29101	22	NUT	8109-193
29102	23	WASHER	7828-139
29103	24	NUT	8109-194
69705	25	WASHER	7828-287
121616	26	LOCK WASHER	8486-362
182464	27	CONDENSER STRAP COMPLETE with Insulation (Used previous to 9/14/37) Not shown	11893-678
182555	28	CONDENSER COMPLETE with Nuts and Washers (5 Mfd.) for all references except Ah, Ak and Am	B-12549-22
182459	28a	CONDENSER COMPLETE with Nuts and Washers (7 Mfd.) for Refs. Ah, Ak and Am	B-12549-22
113707	29	LIGHTNING ARRESTER COMPLETE	C-8814-12
	30	MACHINE SCREW, No. 6-40 x 5/16 inch Fil. Hd. S. (N.P.)	
5511	31	WASHER	7828-2
116272	32	WIRE CLIP	8735-580
54921	33	RIVET	10301-1
	34	MACHINE SCREW, No. 10-30 x 2-5/8 inches Fil. Hd. S. (N.P.) for attaching Ref. 27 to Base (Not shown)	
182457	35	BASE PLATE	9999-1018
34340	36	VENTILATOR	C-7459-6
175595	37	CLAMP	C-9142-5
139509	38	CLAMP	C-9142-5
	39	MACHINE SCREW, No. 8-36 x 3/4 inch Fil. Hd. S. (N.P.)	
	40	MACHINE SCREW, No. 10-30 x 1-1/4 inch Fil. Hd. S. (N.P.)	
	41	LOCK WASHER 3/16 inch Pl. S. (3/32 inch x 1/32 inch) (N.P.)	
156283	42	TIMER for 100 Cycle Code Transmitter Relay	C-9142-12
156282	42a	TIMER for 60 Cycle Code Transmitter Relay	C-9142-12
191750	42b	TIMER for 91-2/3 Cycle Code Transmitter Relay	C-9142-12
103083	43	DOOR for Four Cam Code Transmitter Relay. Used since 9/14/37	C-9142-15
103084	43a	DOOR for Three Cam Code Transmitter Relay. Used since 9/14/37	C-9142-17
107466	43b	DOOR with Glass Shield and Holder for Four Cam Code Transmitter Relay (Inc. 1-43, 1-44, 3-45, 1-46 and 2-47)	C-9142-15
107467	43c	DOOR with Glass Shield and Holder for Three Cam Code Transmitter Relay (Inc. 1-43a, 1-44a, 2-45, 1-46a and 1-47)	C-9142-17

UNION SWITCH & SIGNAL CO.

PIECE	REF.	DESCRIPTION	DWG. REF.
209806	44	GLASS SHIELD COMPLETE with Gasket for Four Cam Code Transmitter Relay. Size of Glass Shield - 6-7/8 inches x 1-7/8 inch.....	8163-282
209807	44a	GLASS SHIELD COMPLETE with Gasket for Three Cam Code Transmitter Relay. Size of Glass Shield - 5-3/4 inches x 1-7/8 inch.....	8163-282
	45	MACHINE SCREW, No. 6-40 x 1/4 inch Fil. Hd. S. (Tin Pl.)	
103085	46	GLASS HOLDER for Four Cam Code Transmitter Relay.....	9999-1363
103086	46a	GLASS HOLDER for Three Cam Code Transmitter Relay.....	9999-1364
103088	47	PLUG.....	8099-36
103229	48	CONDENSER CLAMP NUT.....	8265-355
209863	49	SCREW.....	8098-562
	50	MACHINE SCREW, No. 14-24 x 1 inch Flat Hd. S. (Tin Pl.)	

11-25-46

PLATE W-7

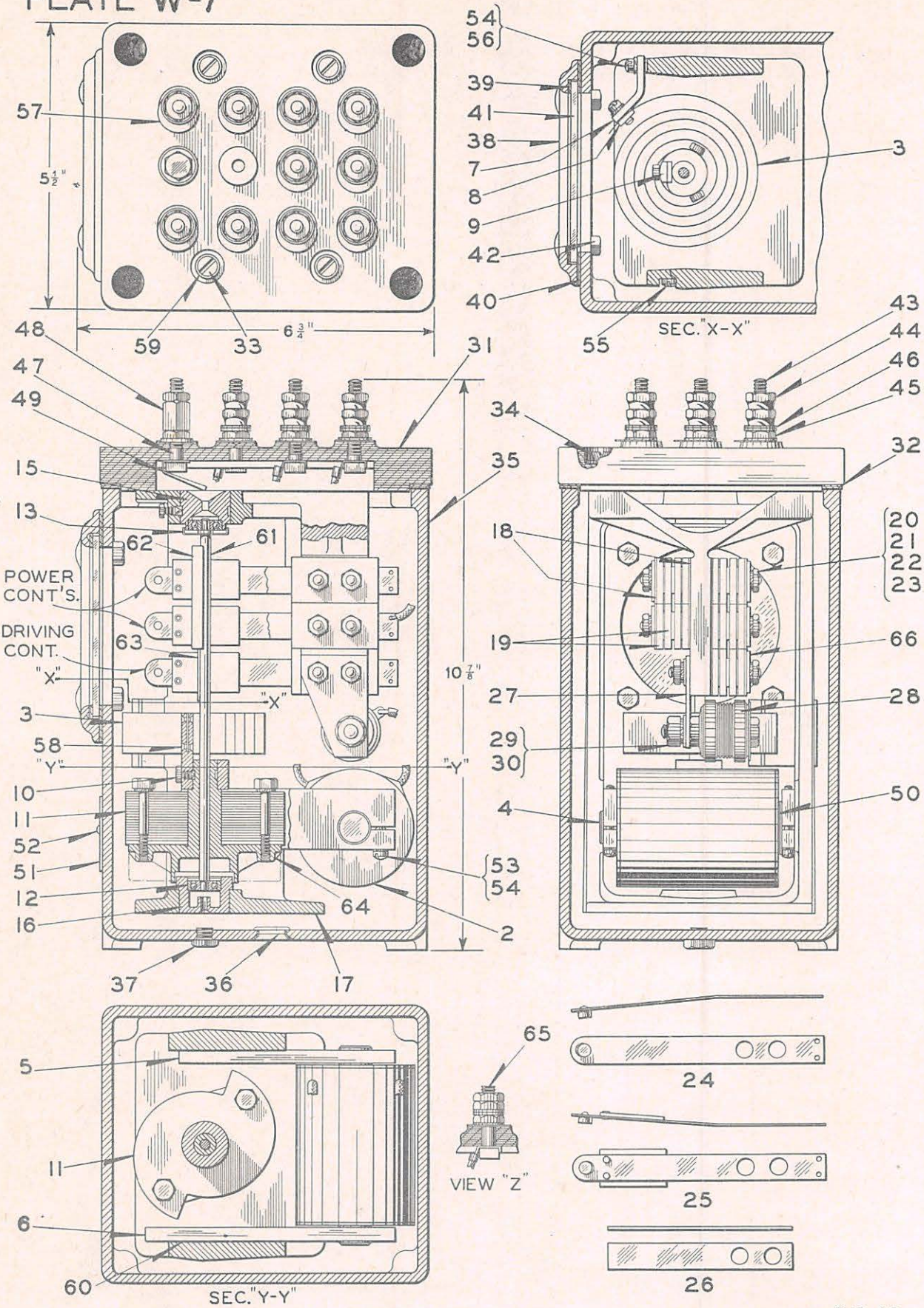

7-1-36 9-3-37 CODE TRANSMITTER (OSCILLATING TYPE) 2-2-42

UNION SWITCH & SIGNAL CO.

CODED TRACK CIRCUIT CONTROL SYSTEM
CODE TRANSMITTER (OSCILLATING TYPE)

Superseded by Plates W-8A and W-9A.
Use this plate only for ordering repair parts.

Order by Plate, Piece, Reference and Abbreviated Description

PIECE	REF.	DESCRIPTION	DWG. REF.
179809	2	COIL COMPLETE (33-Ohms)	8133-413
182726	2a	COIL COMPLETE (200-Ohms)	8133-413
198348	2b	COIL COMPLETE (120-Ohms)	8133-413
199799	2c	COIL COMPLETE (20-Ohms)	8133-413
210347	2d	COIL COMPLETE (70-Ohms)	8133-413
176035	3	SPIRAL SPRING for 75 Code Transmitters	12661-3
176034	3a	SPIRAL SPRING for 120 and 180 Code Transmitters	12661-3
198298	3b	SPIRAL SPRING for 240 Code Transmitter	12661-3
198331	3c	SPIRAL SPRING WITH COLLAR AND RIVETS for 75 Code Transmitter (Inc. 1-3, 1-9 and 2-58)	C-9377-11
198332	3d	SPIRAL SPRING WITH COLLAR AND RIVETS for 120 and 180 Code Transmitters (Inc. 1-3a, 1-9 and 2-58)	C-9377-11
198333	3e	SPIRAL SPRING WITH COLLAR AND RIVETS for 240 Code Transmitter (Inc. 1-3b, 1-9 and 2-58)	C-9377-11
210350	3f	SPIRAL SPRING WITH COLLAR AND RIVETS for 45 Code Transmitter (Inc. 1-3g, 1-9 and 2-58)	C-9377-11
207741	3g	SPIRAL SPRING for 45 Code Transmitter	12661-3
197120	4	CORE	8101-385
197118	5	POLE PIECE	8250-105
197119	6	POLE PIECE	8250-105
176028	7	BRACKET	10914-400
176029	8	PLATE	9999-934
196651	9	SPIRAL SPRING COLLAR	8072-814
100015	10	SET SCREW	8098-1417
196593	11	ARMATURE ASSEMBLY COMPLETE (Without Spiral Spring) for 120 Code Transmitter	C-9377-11

11-25-46

UNION SWITCH & SIGNAL CO.

PIECE	REF.	DESCRIPTION	DWG. REF.
196592	11a	ARMATURE ASSEMBLY COMPLETE (Without Spiral Spring) for 180 and 240 Code Transmitter	C-9377-11
198355	11b	ARMATURE AND SPIRAL SPRING ASSEMBLY for 75 Code Transmitter	C-9377-11
198356	11c	ARMATURE AND SPIRAL SPRING ASSEMBLY for 120 Code Transmitter	C-9377-11
198357	11d	ARMATURE AND SPIRAL SPRING ASSEMBLY for 180 Code Transmitter	C-9377-11
198358	11e	ARMATURE AND SPIRAL SPRING ASSEMBLY for 240 Code Transmitter	C-9377-11
210346	11f	ARMATURE AND SPIRAL SPRING ASSEMBLY for 45 Code Transmitter	C-9377-11
216614	11g	ARMATURE ASSEMBLY COMPLETE (Without Spiral Spring) for 75 Code Transmitter	C-9377-11
	12	BALL BEARING	
100484	13	OIL CUP	8350-882
196650	15	UPPER BEARING BUSHING	8350-877
196649	16	LOWER BEARING BUSHING	8350-876
196668	17	FRAME COMPLETE with Screw Studs and Lower Bearing Bushing	C-9377-10
199476	18	INSULATION	8750-2647
220205	19	INSULATION	8750-2517
8643	20	INSULATING BUSHING	B-10269-1
53	21	WASHER	7828-5
	22	No. 10 PLAIN S. LOCK WASHER (1/16 inch x 3/64 inch) (Tin Pl.)	
	23	HEX. NUT No. 10-30 (Tin Pl.)	
176019	24	CONTACT SPRING COMPLETE with Tungsten Contact Tip	8385-2307
193656	24a	CONTACT SPRING COMPLETE with Silver Platinum Contact Tip	8385-2307
176017	25	CONTACT SPRING COMPLETE with Tungsten Contact Tip	8385-2308
193657	25a	CONTACT SPRING COMPLETE with Silver Platinum Contact Tip	8385-2308
176023	26	STOP SPRING	11893-621
198420	27	RECTIFIER SUPPORT	8750-2741
187757	28	STYLE "RCS-2" RECTIFIER COMPLETE	12746-1
198347	28a	STYLE "RCS-3" RECTIFIER COMPLETE	12746-2
	29	HEX NUT, 1/4-20 S. (Tin Pl.)	
	30	PLAIN S. LOCK WASHER 1/4 inch, (9/64 in. x 5/64 in.) (Tin Pl.)	
187698	31	TOP PLATE	C-9377-1

UNION SWITCH & SIGNAL CO.

PIECE	REF.	DESCRIPTION	DWG. REF.
187736	32	GASKET	8078-1567
	33	MACHINE SCREW No. 14-24 x 3/4 inch Fil. Hd. S. (Tin Pl.) with Washer Ref. 59	
	34	MACHINE SCREW No. 14-24 x 1 inch Flat Hd. S. (Tin Pl.) with Washer Ref. 59	
187704	35	CASE COMPLETE with Ventilator Ref. 36	C-9377-7
206140	35a	CASE COMPLETE with Ventilator Ref. 36 and four No. 14-24 tapped holes in bottom	C-9377-7
34340	36	VENTILATOR	C-7459-6
196652	37	PLUG	9511-137
174307	38	WINDOW FRAME	7632-242
177011	39	GASKET	8078-1167
177012	40	GASKET	8078-1531
177013	41	GLASS	8163-222
28630	42	SCREW	8098-476
	43	TERMINAL POST WITH NUTS AND WASHERS (Inc. 1-43a, 2-44, 1-45, and 3-46)	12451-
122782	43a	TERMINAL POST ONLY, for Ref. 43	8094-1192
29101	44	NUT	8109-193
29103	45	NUT	8109-194
29102	46	WASHER	7828-139
196653	47	OILING SCREW	8190-396
196654	48	OIL SCREW CAP	8109-488
188188	49	OIL DRAIN	11893-737
98851	50	WASHER (Use as required)	8078-1262
177821	51	NAME PLATE	8225-411
	52	No. 4 x 3/16 inch Hardened Rd. Hd. Drive Screw (Tin Pl.)	
	53	MACHINE SCREW No. 8-36 x 7/8 inch Fil. Hd. S. (Tin Pl.)	
	54	No. 8 PLAIN S. LOCK WASHER (1/16 inch x 3/64 inch) (Tin Pl.)	
	55	MACHINE SCREW No. 14-24 x 7/16 inch Rd. Hd. S. (Tin Pl.)	
	56	MACHINE SCREW No. 8-36 x 3/8 inch Fil. Hd. S. (Tin Pl.)	
142777	57	TAG (Orders should specify marking desired)	8988-75

UNION SWITCH & SIGNAL CO.

PIECE	REF.	DESCRIPTION	DWG. REF.
54921	58	RIVET for fastening Spiral Spring to Ref. 9	10301-1
38448	59	WASHER for Refs. 33 and 34	7826-98
198359	60	SHIM (.005 inch Thick)	11893-780
199246	60k	SHIM (.002 inch Thick)	11893-780
196595	61	SHAFT	12501-113
187701	62	CONTACT CAM	9121-165
187703	63	DRIVING CAM for all Codes except 75	9121-164
230459	63a	DRIVING CAM for 75 Code	9121-187
196590	64	ARMATURE HUB for 180 and 240 Code	C-9377-11
196591	64a	ARMATURE HUB for 120 Code	C-9377-11
105881	64b	ARMATURE HUB for 75 Code	C-9377-11
103431	64c	ARMATURE HUB for 45 Code	C-9377-12
	65	TERMINAL POST WITH NUTS AND WASHERS (Inc. 1-65a, 3-45 and 3-46)	12451-
123633	65a	TERMINAL POST ONLY, for Ref. 65	8094-1192
208911	66	WASHER	7826-203

11-25-46

PLATE W-8

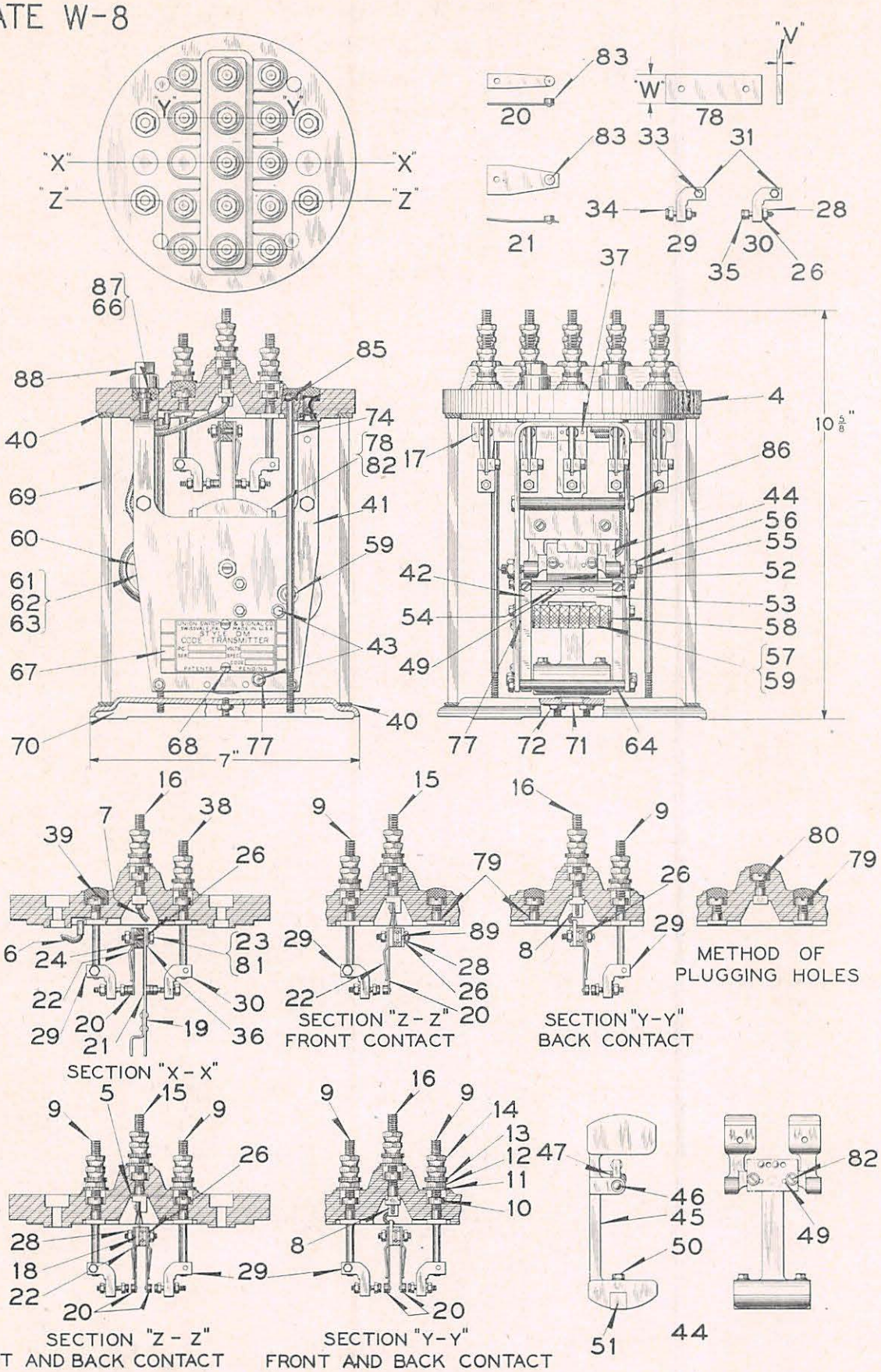

11-25-46
2-2-42
9-9-40

STYLE "DM" CODE TRANSMITTER (75 CODE)

UNION SWITCH & SIGNAL CO.

CODED TRACK CIRCUIT CONTROL SYSTEM
STYLE "DM" CODE TRANSMITTER (75 CODE)
(SHEET METAL MOUNTING BRACKET)

Plug Couplers for "DM" Code Transmitters will be found on Plate W-75.

Orders for complete "DM" Code Transmitters (75 Code) should refer to Plate W-8A. Use this Plate only for ordering repair parts.

Order by Plate, Piece, Reference and Abbreviated Description Given in Heavy Face Type Only

PIECE	REF.	DESCRIPTION	DWG. REF.
107062	4	TOP PLATE ONLY	C-9453-6
209796	5	NUT LOCK	8486-405
241467	6	LEAD COMPLETE	B-9991-25
214453	7	LEAD COMPLETE	B-9991-18
103075	8	TERMINAL CONNECTOR	8744-161
240573	9	TERMINAL POST WITH NUTS AND WASHERS (Inc. 1-9a, 1-10, 1-11, 1-12, 2-13 and 2-14)	12451-361
102493	9a	TERMINAL POST ONLY for Ref. 9	8094-2368
72948	10	NUT	8109-383
69705	11	WASHER	7828-287
29103	12	NUT	8109-194
29102	13	WASHER	7828-139
29101	14	NUT	8109-193
	15	TERMINAL POST WITH SPRING, REINFORCING SPRINGS, NUTS, WASHERS AND NUT LOCK (Inc. 1-15a, 1-10, 1-11, 1-12, 2-13, 2-14 and 1-5)	12451-
107425	15a	TERMINAL POST WITH SPRING AND REINFORCING SPRINGS (Without Nuts and Washers)	8094-2424
	16	TERMINAL POST WITH NUTS AND WASHERS (Inc. 1-16a, 1-10, 1-11, 1-12, 2-13 and 2-14)	12451-
130200	16a	TERMINAL POST ONLY for Ref. 16	8094-1192
107412	17	CONTACT SPRING SUPPORT COMPLETE	8750-2939
228755	18	GUIDE PLATE	12538-185
107413	19	OPERATING ARM	12748-19
102515	20	FRONT OR BACK CONTACT SPRING (.008 inch Thick) with Silver Plat. Tip	8385-2540

11-25-46

UNION SWITCH & SIGNAL CO.

PIECE	REF.	DESCRIPTION	DWG. REF.
102516	20a	FRONT OR BACK CONTACT SPRING (.008 in. Thick) with Tungsten Tip	8385-2540
107559	21	BACK CONTACT SPRING (.008 in. Thick) with Silver Plat. Tip (For Driving Contact)	8385-2652
102525	22	CONTACT SPRING STOP	8735-862
214240	23	SCREW	8098-165
107421	24	INSULATION	12538-222
107423	25	SHIPPING SCREW with No. 10 Hex. Nut (Tin Pl.) (Used in place of Ref. 72 when Transmitter is shipped) (Not shown)	8098-1132
	26	LOCK WASHER, No. 6 Ph. Bz. (Int. Teeth) (N. P.)	
1505	28	NUT	8109-11
109102	29	FRONT OR BACK CONTACT POST WITH TUNGSTEN TIP COMPLETE (Inc. 1-31, 1-26, 1-33, 1-34 and 1-28)	8094-2413
109103	29a	FRONT OR BACK CONTACT POST WITH SIL. PLAT. TIP COMPLETE (Inc. 1-31, 1-26, 1-33, 1-34a and 1-28)	8094-2413
109104	30	BACK CONTACT POST WITH SIL. PLAT. TIP COMPLETE (Inc. 1-31, 1-26, 1-33, 1-35 and 1-28) (For Driving Contact)	8094-2413
102524	31	CONTACT SUPPORT	C-9453-5
211046	33	SCREW	8098-1437
102510	34	CONTACT POST with Tungsten Tip	8094-2369
102511	34a	CONTACT POST with Sil. Plat. Tip	8094-2369
109487	35	CONTACT POST with Sil. Plat Tip	8094-2369
107560	36	LOCK WASHER	8486-430
40917	37	DOWEL	8097-320
	38	TERMINAL POST WITH NUTS AND WASHERS (Inc. 1-10, 1-11, 1-12, 2-13, 2-14 and 1-38a)	12451-
108825	38a	TERMINAL POST ONLY for Ref. 38	8094-2410
	39	TERMINAL POST with Nut Ref. 10	12451-
108826	39a	TERMINAL POST ONLY for Ref. 39	8094-2410
33872	40	GASKET	8078-76
107417	41	BRACKET	C-9377-14
109740	42	POLE PIECE COMPLETE	8250-120
	43	SCREW with No. 8 Ph. Bz. Lock Washer (Int. Teeth) (N. P.)	
230011	43a	SCREW ONLY for Ref. 43	8098-305

UNION SWITCH & SIGNAL CO.

PIECE	REF.	DESCRIPTION	DWG. REF.
107415	44	PENDULUM COMPLETE	C-9377-15
107414	45	PENDULUM	C-9377-15
195175	46	PIN	8097-472
49144	47	WASHER	7828-213
57497	49	DOWEL	8097-872
	50	SCREW with No. 8 S. Lock Washer (Tin Pl.)	8098-701
36104	50a	SCREW ONLY for Ref. 50	8098-701
107609	51	ARMATURE	8157-462
230636	52	SET OF KNIFE EDGE BEARINGS (Knife Edge Bearings should be ordered in sets to insure proper bearing surface is obtained)	12737-6
107420	53	BEARING SUPPORT	C-9377-15
	54	MACHINE SCREW No. 6-40 x 1/2 in. Fil. Hd. Br. (N. P.) with No. 6 Ph. Bz. Lock Washer (Int. Teeth) (N. P.)	
107422	55	GUIDE SCREW	8378-380
535	56	NUT	8109-1
219999	57	COIL COMPLETE (55-Ohms)	8133-542
230955	57a	COIL COMPLETE (23-Ohms)	8133-542
175630	58	WASHER	7828-374
107509	59	CORE	8101-401
187757	60	RECTIFIER	12746-1
	61	JAM NUT 1/4 in. Hex. Hd. S. (Tin Pl.)	
73099	62	WASHER	7826-66
	63	LOCK WASHER 1/4 in. Ph. Bz. (Int. Teeth) (N. P.)	
214931	64	SPACER (Having No. 8-36 Taps) Used previous to 10/14/40	8350-940
219874	64a	SPACER (Having No. 10-30 Taps) Used since 10/14/40	8350-940
	65	MACHINE SCREW, No. 14-24 x 3/4 in. Fil. Hd. S. (Tin Pl.) with Washer Ref. 66 (Used previous to 9/23/40 for attaching Top Plate to Bracket) (Not shown)	
38448	66	WASHER for Refs. 65 and 87	7826-98
109845	67	NAME PLATE for Transmitter having 4F-4B L.V. Sil. Plat. to Sil. Plat. Load Contacts	8225-541
109842	67a	NAME PLATE for Transmitter having 2F-2B L. V. Sil. Plat. to Sil. Plat. Load Contacts	8225-541

UNION SWITCH & SIGNAL CO.

PIECE	REF.	DESCRIPTION	DWG. REF.
109846	67b	NAME PLATE for Transmitter having 2F-2B H. V. Tungsten to Tungsten and 2F-2B L. V. Sil. Plat. to Sil. Plat. Load Contacts	8225-541
109843	67c	NAME PLATE for Transmitter having 2F-2B H. V. Tungsten to Tungsten Load Contacts	8225-541
109844	67d	NAME PLATE for Transmitter having 4F-4B H. V. Tungsten to Tungsten Load Contacts	8225-541
217533	67e	NAME PLATE for Transmitter having 1F-1B L. V. Sil. Plat. to Sil. Plat. and 1F-1B H. V. Tungsten to Tungsten Load Contacts	8225-541
	68	MACHINE SCREW, No. 6-40 x 3/16 in. Rd. Hd. Br. (N.P.)	
125249	69	GLASS COVER	8163-96
107555	70	BASE with Ventilator Ref. 71 and Gasket Ref. 40	10937-8
34340	71	VENTILATOR	C-7459-6
	72	MACHINE SCREW, No. 10-30 x 3/16 in. Rd. Hd. S. (Tin. Pl.) with No. 10 Ph. Bz. Lock Washer (Int. Teeth) (N. P.)	
107882	73	WIRE CLAMP (Not shown)	11893-899
	74	MACHINE SCREW, No. 10-30 x 8 in. Fil. Hd. S. (Tin Pl.) with Nut Ref. 75	
183042	75	NUT (Used with Ref. 74 previous to 11/13/40) (Not shown)	8265-126
53124	77	WASHER	8112-66
109047	78a	ADJUSTING WEIGHT ("W" = 5/8 in. and "V" = .032 in.)	9672-224
109048	78b	ADJUSTING WEIGHT ("W" = 5/8 in. and "V" = .0641 in.)	9672-224
	79	TERMINAL POST with Nut Ref. 10	
149216	79a	TERMINAL POST ONLY for Ref. 79	8094-2202
	80	TERMINAL POST with Nut Ref. 10	
214907	80a	TERMINAL POST ONLY for Ref. 80	8094-2207
218836	81	NUT	8265-319
	82	MACHINE SCREW, No. 6-40 x 1/2 in. Fil. Hd. Br. (N.P.) with No. 6S. Lock Washer (Tin Pl.)	
193651	83	CONTACT TIP (Sil. Plat.) for Refs. 20 and 21	8341-534
162642	83a	CONTACT TIP (Tungsten) for Ref. 20a	8341-317
221662	84	WALL MOUNTING BRACKET (Not shown)	12404-42
139539	85	WASHER	7828-346
	86	SCREW with No. 10 Ph. Bz. Lock Washer (Int. Teeth) (N.P.) for use with Ref. 64a	12471-

PLATE W-8A

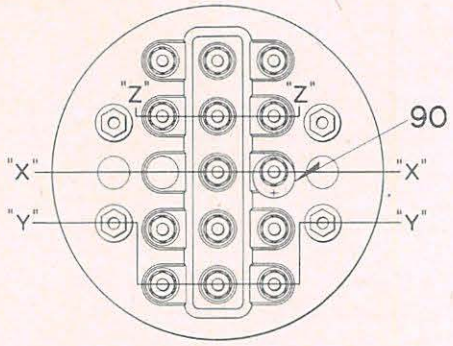

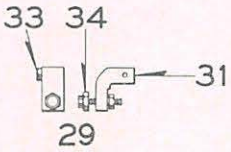

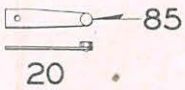

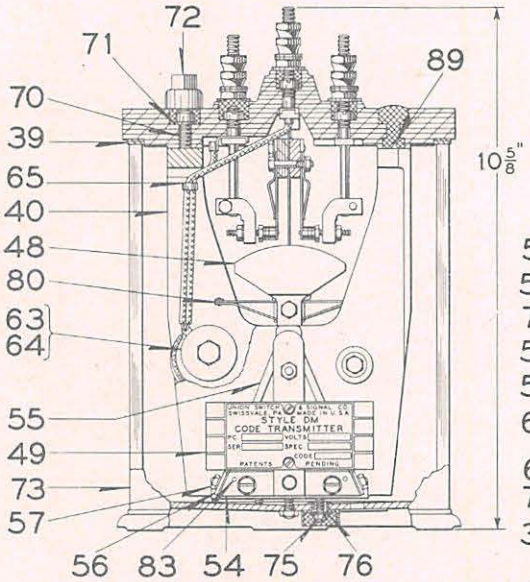

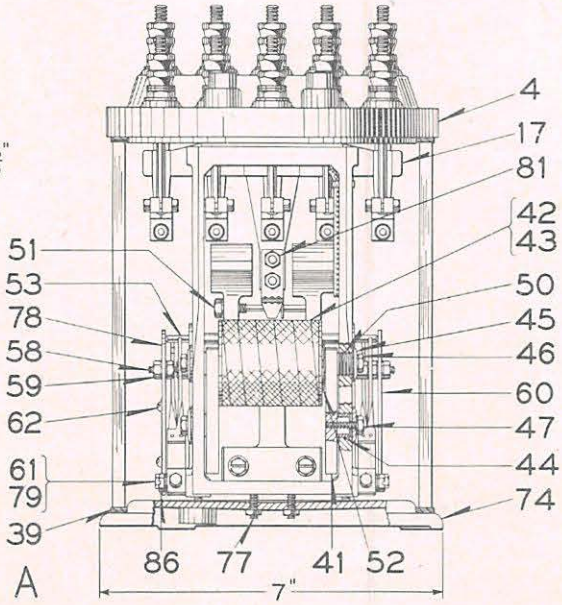

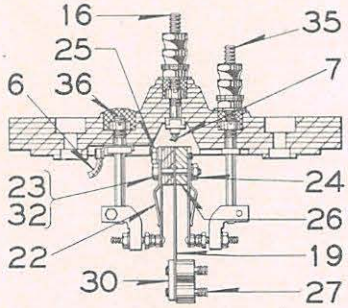

SECTION "X-X"

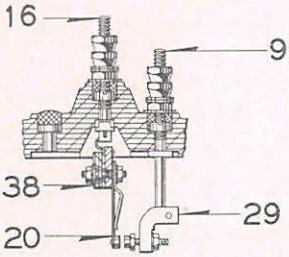

SECTION "Z-Z"
BACK CONTACT

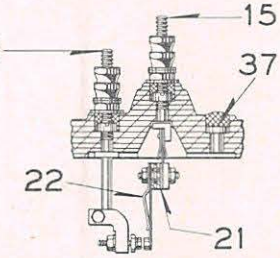

SECTION "Y-Y"
FRONT CONTACT

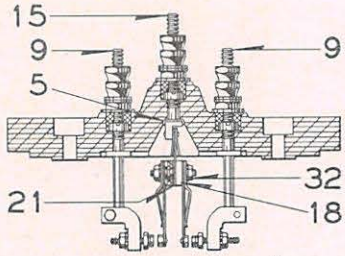

SECTION "Y-Y"
FRONT AND BACK
CONTACT

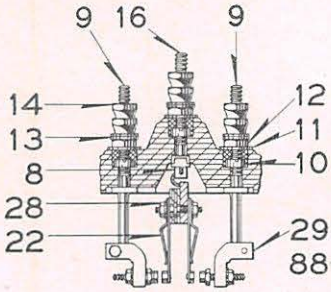

SECTION "Z-Z"
FRONT AND BACK
CONTACT

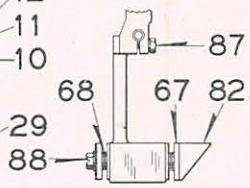

APPLICATION OF
ARMATURE AND
ADJUSTING WEIGHTS

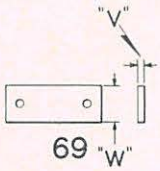

11-25-46
2-28-45

STYLE "DM" CODE TRANSMITTER (75 CODE)

UNION SWITCH & SIGNAL CO.

CODED TRACK CIRCUIT CONTROL SYSTEM

STYLE "DM" CODE TRANSMITTER (75 CODE) (CAST MOUNTING BRACKET)

When required order should specify: "Equipped with plug couplers" "Equipped for use with plug coupler". Plug couplers shown on Plate W-75.
If Wall Mounting Bracket Ref. 84 is desired orders should so state.
Details of Transmitters having sheet Metal Brackets will be found on Plate W-8.

Order by Plate, Piece, Reference and Abbreviated Description

STYLE "DM" CODE TRANSMITTER (75 CODE) with ___F - ___B Load Contacts and One Sil. Plat. to Sil. Plat. Drive Contact

PIECE	REF.	LOAD CONTACT DESCRIPTION	D.C. VOLTS	COIL REF.	DWG. REF.
242041	A	4F-4B L.V. Sil. Plat. to Sil. Plat.	8-12	42	C-9376-12
242040	Aa	2F-2B L.V. Sil. Plat. to Sil. Plat.	8-12	42	C-9376-12
242042	Ab	2F-2B H.V. Tung. to Tung.	8-12	42	C-9376-12
242043	Ac	4F-4B H.V. Tung. to Tung.	8-12	42	C-9376-12
242044	Ad	2F-2B { 1F-1B L.V. Sil. Plat. to Sil. Plat. 1F-1B H.V. Tung. to Tung.	8-12	42	C-9376-12
242045	Ae	4F-4B { 2F-2B L.V. Sil. Plat. to Sil. Plat. 2F-2B H.V. Tung. to Tung.	8-12	42	C-9376-12
242046	Af	2F-2B L. V. Sil. Plat. to Sil. Plat.	8	42a	C-9376-12
242047	Ag	4F-4B L. V. Sil. Plat. to Sil. Plat.	8	42a	C-9376-12
242048	Ah	2F-2B L. V. Sil. Plat. to Sil. Plat.	2	42b	C-9376-12
242049	Aj	4F-4B L. V. Sil. Plat. to Sil. Plat.	2	42b	C-9376-12

PIECE	REF.	DESCRIPTION	DWG. REF.
103091	4	TOP PLATE ONLY	C-9453-6
209796	5	NUT LOCK	8486-405
241467	6	LEAD COMPLETE	B-9991-25
214453	7	LEAD COMPLETE	B-9991-18
221061	8	TERMINAL CONNECTOR	8744-161
	9	TERMINAL POST WITH NUTS AND WASHERS (Inc. 1-9a, 1-10, 1-11, 1-12, 2-13 and 2-14)	12451-

UNION SWITCH & SIGNAL CO.

PIECE	REF.	DESCRIPTION	DWG. REF.
102493	9a	TERMINAL POST ONLY for Ref. 9	8094-2368
69706	10	NUT	8109-383
69705	11	WASHER	7828-287
29103	12	NUT	8109-194
29102	13	WASHER	7828-139
29101	14	NUT	8109-193
	15	TERMINAL POST WITH SPRING, REINFORCING SPRINGS, NUTS, WASHERS AND NUT LOCK (Inc. 1-15a, 1-10, 1-11, 1-12, 2-13, 2-14 and 1-5)	12451-
107425	15a	TERMINAL POST WITH SPRING AND REINFORCING SPRINGS (Without Nuts and Washers)	8094-2424
	16	TERMINAL POST WITH NUTS AND WASHERS (Inc. 1-16a, 1-10, 1-11, 1-12, 2-13 and 2-14)	12451-
130200	16a	TERMINAL POST ONLY for Ref. 16	8094-1192
221035	17	CONTACT SPRING SUPPORT COMPLETE	12770-31
221049	18	GUIDE PLATE	12538-241
242074	19	OPERATING ARM	11893-1018
224184	20	FRONT OR BACK CONTACT SPRING (.0126 in. Thick) with Silver Plat. Tip	8385-2540
224185	20a	FRONT OR BACK CONTACT SPRING (.0126 in. Thick) with Tungsten Tip	8385-2540
244066	21	GUIDE	12538-241
102525	22	CONTACT SPRING STOP	8735-862
221335	23	SCREW	8098-1437
218836	24	NUT	8265-319
221143	25	SCREW	8098-1437
221033	26	SPACER	12538-240
22621	27	BUSHING COMPLETE	8095-199
1505	28	NUT	8109-11
109102	29	FRONT OR BACK CONTACT POST WITH TUNGSTEN TIP COMPLETE (Inc. 1-31, 1-32, 1-33, 1-34 and 1-28)	8094-2413
109103	29a	FRONT OR BACK CONTACT POST WITH SIL. PLAT. TIP COMPLETE (Inc. 1-31, 1-32, 1-33, 1-34a and 1-28)	8094-2413
244065	30	CLAMPING PLATE	12538-277

UNION SWITCH & SIGNAL CO.

PIECE	REF.	DESCRIPTION	DWG. REF.
102524	31	CONTACT SUPPORT	C-9453-5
	32	LOCK WASHER, No. 6 Ph. Bz. (Int. Teeth) (N.P.)	
211046	33	SCREW	8098-1437
102510	34	CONTACT POST with Tungsten Tip	8094-2369
102511	34a	CONTACT POST with Sil. Plat. Tip	8094-2369
	35	TERMINAL POST WITH NUTS AND WASHERS (Inc. 1-10, 1-11, 1-12, 3-13, 2-14 and 1-35a)	12451-
108825	35a	TERMINAL POST ONLY for Ref. 35	8094-2410
	36	TERMINAL POST with Nut Ref. 10	12451-
108826	36a	TERMINAL POST ONLY for Ref. 36	8094-2410
239949	37	DUMMY PLUG	8078-732
184902	38	WASHER	7828-379
33872	39	GASKET for top plate and base	8078-76
242056	40	BRACKET COMPLETE	C-9377-20
250533	41	POLE PIECE	8250-133
219999	42	COIL COMPLETE (55-Ohms)	8133-542
230955	42a	COIL COMPLETE (23-Ohms)	8133-542
222330	42b	COIL COMPLETE (1-Ohm)	8133-542
242059	43	CORE	8101-407
250530	44	BUSHING	8350-1009
250487	45	WASHER	8112-96
	46	SCREW Ref. 46a with No. 8 Ph. Bz. Lock Washer (Int. Teeth) (N.P.)	
139462	46a	SCREW ONLY	8098-491
	47	SCREW Ref. 47a with No. 8 Ph. Bz. Lock Washer (Int. Teeth) (N.P.)	
77785	47a	SCREW ONLY	8098-1404
240870	48	PENDULUM	C-9377-17
109845	49	NAME PLATE for Refs. A, Ag and Aj	8225-541
109842	49a	NAME PLATE for Refs. Aa, Af and Ah	8225-541
109843	49b	NAME PLATE for Ref. Ab	8225-541
109844	49c	NAME PLATE for Ref. Ac	8225-541
217533	49d	NAME PLATE for Ref. Ad	8225-541

UNION SWITCH & SIGNAL CO.

PIECE	REF.	DESCRIPTION	DWG. REF.
109846	49e	NAME PLATE for Ref. Ae	8225-541
250531	50	BUSHING	8350-1009
	51	PIVOT PIN Ref. 51a with No. 10 Ph. Bz. Lock Washer (Int. Teeth) (N.P.)	
242073	51a	PIVOT PIN ONLY	8378-384
175630	52	SPRING WASHER	7828-374
242070	53	SHAFT	12501-173
242060	54	BEARING SPRING MOUNTING BLOCK	12538-273
242065	55	BEARING ARM COMPLETE	12748-37
242061	56	SPRING CLAMP	12538-274
	57	SCREW Ref. 57a with No. 8 Ph. Bz. Lock Washer (Int. Teeth) (N.P.)	
248300	57a	SCREW ONLY	8098-305
	58	STUD Ref. 58a with two Nuts Ref. 59 and two No. 8 Ph. Bz. Lock Washers (Int. Teeth) (N.P.)	
242071	58a	STUD ONLY	8114-1031
28166	59	NUT	8109-192
242068	60	BEARING END STRAP	9999-2038
	61	SCREW Ref. 61a with No. 8 Ph. Bz. Lock Washer (Int. Teeth) (N.P.) and two Washers Ref. 79	
107552	61a	SCREW ONLY	8098-305
	62	MACHINE SCREW, No. 6-40 x 3/16 in. Rd. Hd. Br. (N.P.)	
	63	RECTIFIER Ref. 63a with 1/4 in.-20 S. Hex. Jam Nut (Tin Pl.), 1/4 in. Ph. Bz. Lock Washer (Int. Teeth) (N.P.) and Washer Ref. 64	
187757	63a	RECTIFIER ONLY	12746-1
73099	64	WASHER	7826-66
107882	65	WIRE CLAMP	11893-899
242058	67	ARMATURE	8157-499
44618	68	WASHER (Used as required on Pendulum to obtain mechanical balance)	7828-184
109049	69	ADJUSTING WEIGHT (W - 3/4 in., V - .032 in.)	9672-223
109050	69a	ADJUSTING WEIGHT (W - 3/4 in., V - .0641 in.)	9672-223
109051	69b	ADJUSTING WEIGHT (W - 3/4 in., V - 1/8 in.)	9672-223
	70	STUD Ref. 70a with Washer Ref. 71	
219560	70a	STUD ONLY	8114-972

UNION SWITCH & SIGNAL CO.

PIECE	REF.	DESCRIPTION	DWG. REF.
38448	71	WASHER	7826-98
105713	72	INSULATED NUT	12770-1
125249	73	GLASS COVER	8163-96
242081	74	BASE COMPLETE	10937-11
	75	MACHINE SCREW, No. 10-30 x 3/4 in. Fil. Hd. S. (Tin Pl.) with Washer Ref. 76	
73493	76	WASHER	7826-78
	77	SHIPPING SCREW Ref. 77a with No. 10-30 Hex. Nut (Tin Pl.) Used when Transmitter is being shipped, replaced by Ref. 77b when Transmitter is put in service)	
107423	77a	SHIPPING SCREW	8098-1132
	77b	MACHINE SCREW, No. 10-30 x 3/16 in. Rd. Hd. S. (Tin Pl.) with No. 10 Ph. Bz. Lock Washer (Int. Teeth) (N.P.)	
242069	78	BEARING END STRAP	9999-2038
234195	79	WASHER	7826-316
242076	80	PENDULUM ENGAGEMENT COMPLETE	12748-42
1515	81	NUT	8109-23
244067	82	ARMATURE EXTENSION	11893-1028
209720	83	DOWEL	8097-409
221662	84	WALL MOUNTING BRACKET (Not shown)	12404-42
193651	85	SILVER PLAT. CONTACT TIP for Ref. 20	8341-534
162642	85a	TUNGSTEN CONTACT TIP for Ref. 20a	8341-317
	86	SCREW Ref. 86a with No. 10 Ph. Bz. Lock Washer (Int. Teeth) (N.P.) and Washer Ref. 68	
249001	86a	SCREW ONLY	8098-850
	87	SCREW Ref. 87a with No. 6 Ph. Bz. Lock Washer (Int. Teeth) (N.P.)	
211046	87a	SCREW ONLY	8098-1437
	88	SCREW Ref. 88c with No. 10 Ph. Bz. Lock Washer (Int. Teeth) (N.P.)	
	88a	SCREW Ref. 88d with No. 10 Ph. Bz. Lock Washer (Int. Teeth) (N.P.)	
	88b	SCREW Ref. 88e with No. 10 Ph. Bz. Lock Washer (Int. Teeth) (N.P.)	
216532	88c	SCREW (5/16 in. long)	8098-850
216533	88d	SCREW (7/16 in. long)	8098-850
248093	88e	SCREW (9/16 in. long)	8098-850
140571	89	PIN	8097-802
142777	90	TAG (Orders should specify marking desired)	8988-75

PLATE W-9

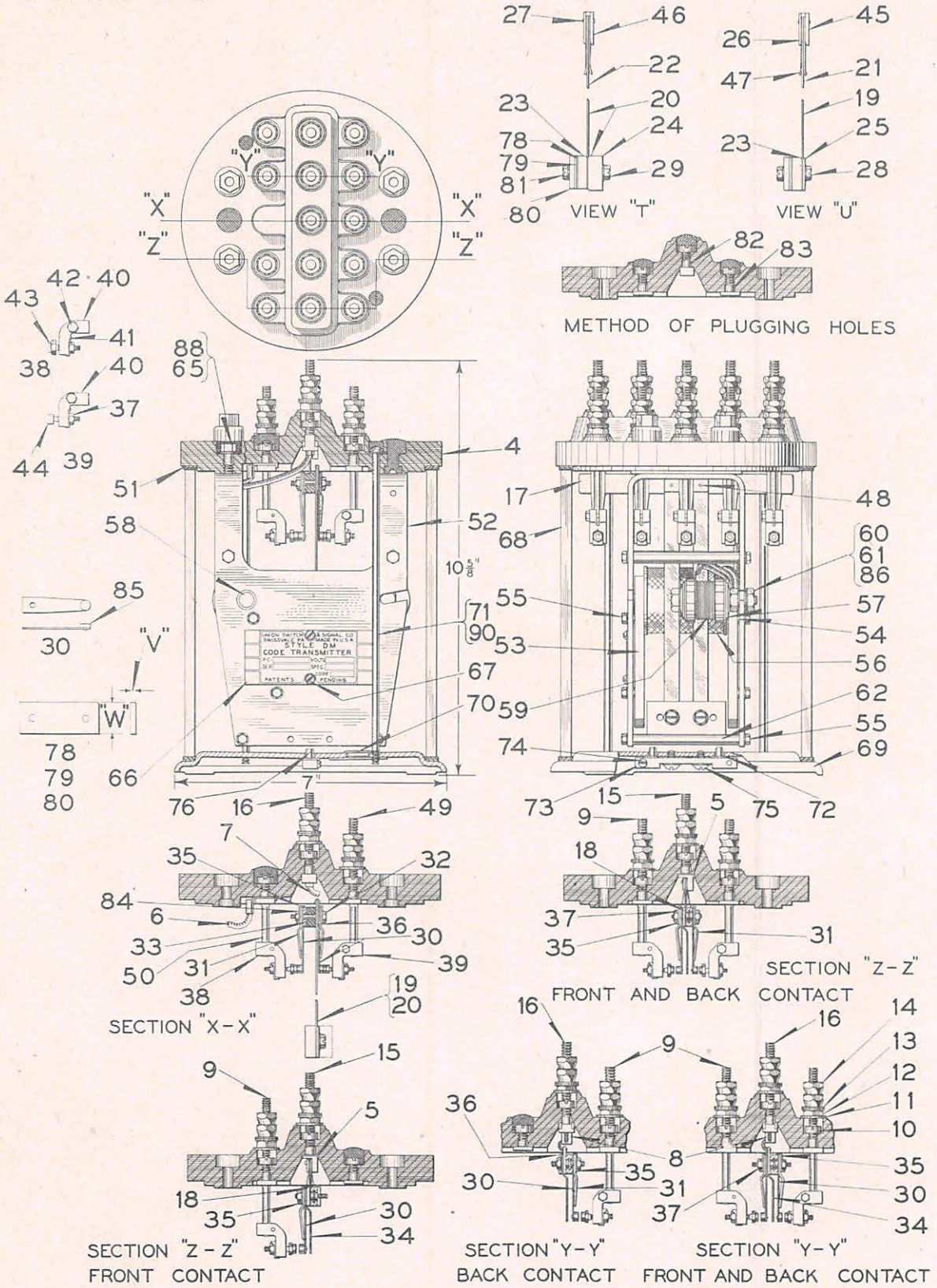

STYLE "DM" CODE TRANSMITTER
(120 AND 180 CODE)

11-25-46
2-2-42
9-9-40

UNION SWITCH & SIGNAL CO.

CODED TRACK CIRCUIT CONTROL SYSTEM

STYLE "DM" CODE TRANSMITTER (120 & 180 CODE)

Plug Couplers for "DM" Code Transmitters will be found on Plate W-75.

Orders for complete "DM" Code Transmitters (120 and 180 Code) should refer to Plate W-9A. Use this Plate only for ordering repair parts.

Order by Plate, Piece, Reference and Abbreviated Description

PIECE	REF.	DESCRIPTION	DWG. REF.
107062	4	TOP PLATE ONLY	C-9453-6
209796	5	NUT LOCK	8486-405
214450	6	LEAD COMPLETE	B-9991-18
214451	7	LEAD COMPLETE	B-9991-18
109736	8	TERMINAL CONNECTOR	8244-161
	9	TERMINAL POST WITH NUTS AND WASHERS (Inc. 1-9a, 1-10, 1-11, 1-12, 2-13 and 2-14)	12451-
102493	9a	TERMINAL POST ONLY for Ref. 9	8094-2368
72948	10	NUT	8109-383
69705	11	WASHER	7828-287
29103	12	NUT	8109-194
29102	13	WASHER	7828-139
29101	14	NUT	8109-193
	15	TERMINAL POST WITH SPRING,REINFORCING SPRINGS, NUTS, WASHERS and NUT LOCK (Inc. 1-15a, 1-10, 1-11, 1-12, 2-13, 2-14, and 1-5)	12451-
107425	15a	TERMINAL POST WITH SPRING AND REINFORCING SPRINGS (Without Nuts and Washers)	8094-2367
	16	TERMINAL POST WITH NUTS AND WASHERS (Inc. 1-16a, 1-10, 1-11, 1-12, 2-13 and 2-14)	12451-
130200	16a	TERMINAL POST ONLY for Ref. 16	8094-1192
109445	17	CONTACT SPRING SUPPORT COMPLETE	8750-2939
107722	18	GUIDE PLATE	12538-185
109435	19	OPERATING ARM COMPLETE (180 CODE)	12748-20
109436	20	OPERATING ARM COMPLETE (120 CODE)	12748-20
109430	21	SPRING (.0188 in. Thick) for Ref. 19	8735-948
109431	22	SPRING (.0172 in. Thick) for Ref. 20	8735-948

UNION SWITCH & SIGNAL CO.

PIECE	REF.	DESCRIPTION	DWG. REF.
109433	23	ARMATURE	8157-467
109434	24	ARMATURE	8157-467
216717	25	WASHER	7828-275
109432	26	CLAMPING PIECE	11893-917
37417	27	RIVET	10301-21
	28	SCREW with No. 10 Ph. Bz. Lock Washer (N.P.)	
216532	28a	SCREW ONLY for Ref. 28	8098-850
	29	SCREW with No. 10 Ph. Bz. Lock Washer (N.P.)	
216953	29a	SCREW ONLY for Ref. 29	8098-850
102515	30	FRONT OR BACK CONTACT SPRING (.008 in. Thick) with Silver Plat. Tip	8385-2540
102516	30a	FRONT OR BACK CONTACT SPRING (.008 in. Thick) with Tungsten Tip	8385-2540
102525	31	CONTACT SPRING STOP	8735-862
218835	32	SCREW	8098-1437
107421	33	INSULATION	12538-222
109669	34	CONTACT STOP	8735-949
210763	35	NUT LOCK	8486-405
216721	36	NUT LOCK	8486-368
1505	37	NUT	8109-11
109102	38	FRONT OR BACK CONTACT POST WITH TUNGSTEN TIP COMPLETE (Inc. 1-40, 1-41, 1-42, 1-43 and 1-37)	8094-2413
109103	38a	FRONT OR BACK CONTACT POST WITH SIL. PLAT. TIP COMPLETE (Inc. 1-40, 1-41, 1-42, 1-43a, and 1-37)	8094-2413
109104	39	CONTACT POST WITH SIL. PLAT. TIP COMPLETE (Inc. 1-40, 1-41, 1-42, 1-44 and 1-37) (For Driving Contact)	8094-2413
102524	40	CONTACT SUPPORT	C-9453-5
134516	41	NUT LOCK	8486-368
211046	42	SCREW	8098-1437
102510	43	CONTACT POST WITH TUNGSTEN TIP	8094-2369
102511	43a	CONTACT POST WITH SIL. PLAT. TIP	8094-2369
109487	44	CONTACT POST WITH SIL. PLAT. TIP	8094-2369
218834	45	CLAMPING PIECE	12538-235

UNION SWITCH & SIGNAL CO.

PIECE	REF.	DESCRIPTION	DWG. REF.
218839	46	CLAMPING PIECE	12538-235
218833	47	REINFORCING SPRING	8735-955
62128	48	DOWEL	8097-938
	49	TERMINAL POST WITH NUTS AND WASHERS (Inc. 1-10, 1-11, 1-12, 2-13, 2-14 and 1-49a)	12451-
108825	49a	TERMINAL POST ONLY for Ref. 49	8094-2410
	50	TERMINAL POST WITH NUT Ref. 10	12451-
108826	50a	TERMINAL POST ONLY for Ref. 50	8094-2410
33872	51	GASKET	8078-76
107409	52	BRACKET COMPLETE	C-9377-14
109741	53	POLE PIECE COMPLETE	8250-121
195397	54	WASHER (For 180 Code)	7828-368
	55	SCREW with No. 8 S. Lock Washer (Tin Pl.) for use with Ref. 62 and for attaching Pole Piece to Bracket	
107552	55a	SCREW ONLY for Ref. 55	8098-305
	55b	SCREW with No. 10 Lock Washer (Tin Pl.) for use with Ref. 62a	
135060	55c	SCREW ONLY for Ref. 55b	8098-1147
219999	56	COIL COMPLETE (55 Ohms)	8133-542
210515	57	WASHER	8078-1503
107509	58	CORE	8101-401
187757	59	RECTIFIER COMPLETE	12746-1
	60	HEX. JAM NUT 1/4 in. -20 S. (Tin Pl.)	
73099	61	WASHER	7826-66
214931	62	SPACER (Having No. 8-36 Taps) Used previous to 10-14-40	8350-940
219874	62a	SPACER (Having No. 10-30 taps) Used since 10-14-40	8350-940
183042	63	NUT (Used on Ref. 71 pervious to 11-13-40) Not shown	8265-126
	64	MACHINE SCREW No. 14-24 x 3/4 in. Fil. Hd. S. (Tin Pl.) with Washer Ref. 65 (Used previous to 9-23-40 for attaching Top Plate to Support Bracket) (Not shown)	
38448	65	WASHER ONLY for Refs. 64 and 88	7826-98
109842	66	NAME PLATE for Code Transmitters having 2F-2B L.V. Contacts	8225-541
109845	66a	NAME PLATE for Code Transmitters having 4F-4B L.V. Contacts	8225-541

UNION SWITCH & SIGNAL CO.

PIECE	REF.	DESCRIPTION	DWG. REF.
109846	66b	NAME PLATE for Code Transmitters having 2F-2B L.V. Contacts and 2F-2B H.V. Contacts	8225-541
217533	66c	NAME PLATE for Code Transmitters having 1F-1B L.V. Contacts and 1F-1B H.V. Contacts	8225-541
109843	66d	NAME PLATE for Code Transmitters having 2F-2B H.V. Contacts	8225-541
109844	66e	NAME PLATE for Code Transmitters having 4F-4B H.V. Contacts	8225-541
	67	MACHINE SCREW No. 6-40 x 3/16 in. Rd. Hd. Br. (N.P.)	
125249	68	GLASS COVER	8163-96
107557	69	BASE WITH VENTILATOR Ref. 70 and Gasket Ref. 51	10937-8
34340	70	VENTILATOR for Ref. 69	C-7459-6
	71	MACHINE SCREW, No. 10-30 x 8 in. Fil. Hd. S. (Tin Pl.)	
185211	72	WASHER	8078-1496
107614	73	LOCKING PLATE	9999-1558
	74	MACHINE SCREW, No. 6-40 x 3/8 in. Fil. Hd. S. (Tin. Pl.)	
	75	MACHINE SCREW, No. 10-30 x 5/16 in. Rd. Hd. S. (Tin Pl.) with No. 10 S. Lock Washer (Tin Pl.)	
	76	RIVET, 3/16 in. x 5/16 in. Rd. Hd. I	8097-466
107882	77	WIRE CLAMP (Not shown)	11893-899
109049	78	ADJUSTING WEIGHT ("W" = 13/16 in. and "V" = .032 in.)	9672-223
109050	79	ADJUSTING WEIGHT ("W" = 13/16 in. and "V" = .0641 in.)	9672-223
109051	80	ADJUSTING WEIGHT ("W" = 13/16 in. and "V" = 1/8 in.)	9672-223
78505	81	SCREW (7/32 in. long) with #10 Ph. Bz. Lock Washer (N.P.)	8098-850
216532	81a	SCREW (5/16 in. long) with #10 Ph. Bz. Lock Washer (N.P.)	8098-850
216533	81b	SCREW (7/16 in. long) with #10 Ph. Bz. Lock Washer (N.P.)	8098-850
	82	TERMINAL POST with Nut Ref. 10	12451-
214907	82a	TERMINAL POST ONLY for Ref. 82	8094-2207
	83	TERMINAL POST with Nut Ref. 10	12451-
149216	83a	TERMINAL POST ONLY for Ref. 83	8094-2202
218836	84	NUT	8265-319
193651	85	CONTACT TIP (Sil. Plat.) for Ref. 30	8341-534
162642	85a	CONTACT TIP (Tungsten) for Ref. 30a	8341-317
	86	1/4 in. LOCK WASHER (Tin.Pl.)	

UNION SWITCH & SIGNAL CO.

PIECE	REF.	DESCRIPTION	DWG. REF.
107615	87	SHIPPING SCREW (Not shown) (Used in place of Plug Ref. 76 when Transmitter is shipped)	8098-1133
219560	88	STUD	8114-972
105713	89	INSULATING NUT	12770-1
139539	90	WASHER	7828-346
221662	91	WALL MOUNTING BRACKET (Not shown)	12404-42
237442	92	MATERIAL TO CONVERT DOUBLE PENDULUM 120 CODE TRANSMITTER TO SINGLE PENDULUM ARRANGEMENT	C-9376-10
237443	92a	MATERIAL TO CONVERT DOUBLE PENDULUM 180 CODE TRANSMITTER TO SINGLE PENDULUM ARRANGEMENT	C-9376-10

11-25-46

PLATE W-9A

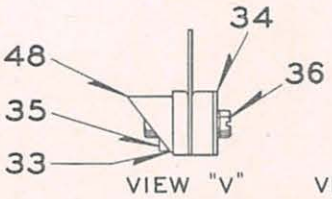

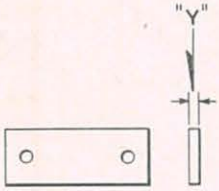

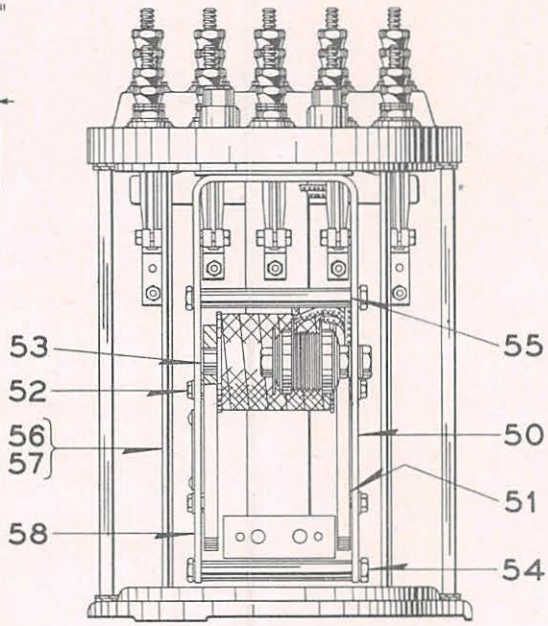

DETAILS OF TRANSMITTERS HAVING SHEET METAL BRACKETS

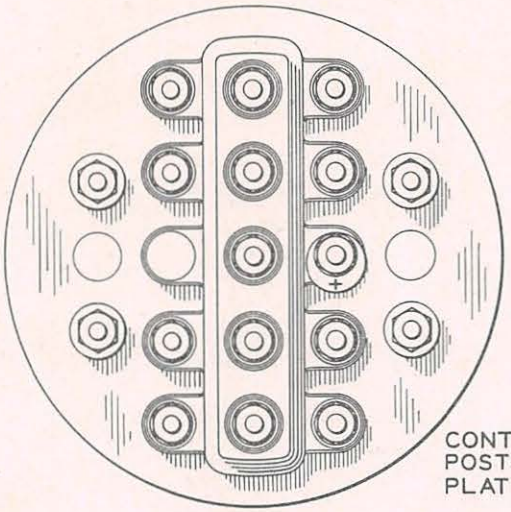

CONTACT SPRINGS, TERMINAL POSTS, ETC. ARE SHOWN ON PLATE W-9B.

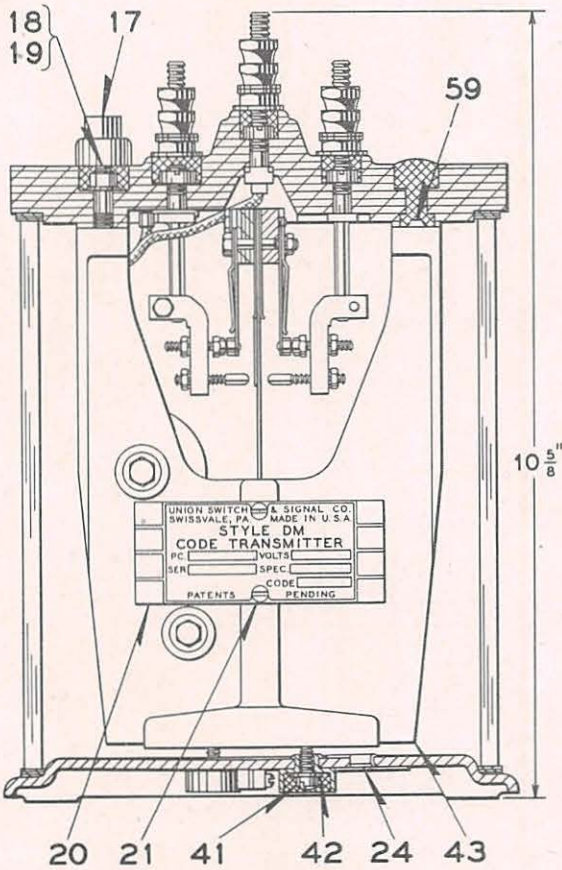

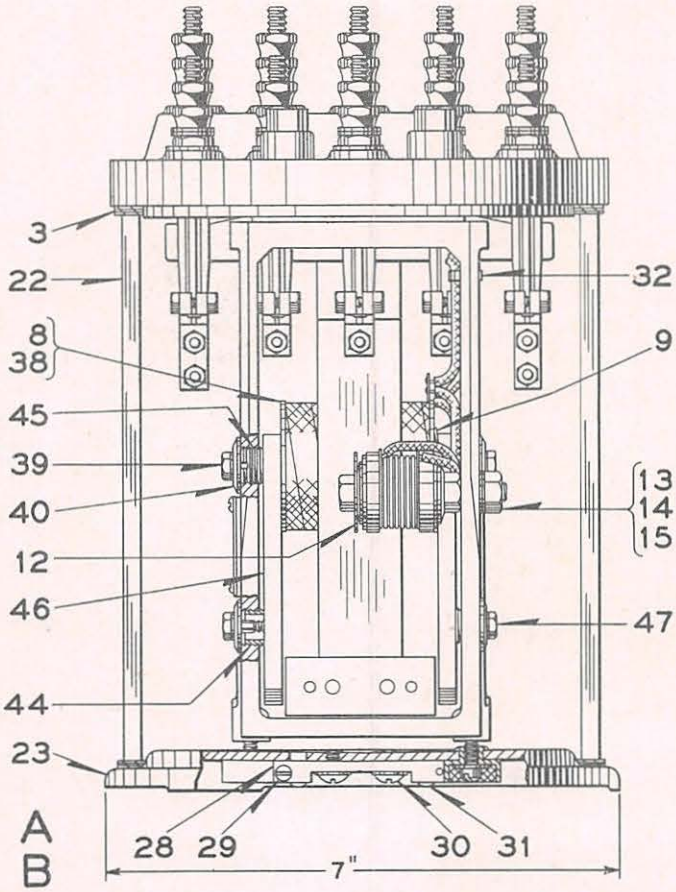

A
B

11-25-46
3-7-45

STYLE "DM" CODE TRANSMITTER

UNION SWITCH & SIGNAL CO.

CODED TRACK CIRCUIT CONTROL
STYLE "DM" CODE TRANSMITTER (120 & 180 CODE)

When required order should specify:
"Equipped with Plug Coupler"
"Equipped for use with Plug Coupler"

Plug couplers are shown on Plate W-75. If Wall Mounting Bracket Ref. 37 is desired orders should so state.

Contact Springs, Terminal Posts, etc. are shown on Plate W-9B.

Order by Plate, Piece, Reference and Abbreviated Description

STYLE "DM" CODE TRANSMITTER COMPLETE 120-CODE) WITH ___F - ___B LOAD CONTACTS AND ONE SIL. PLAT. TO SIL. PLAT. DRIVE CONTACT. ARMATURE ADJUSTING WEIGHTS ARRANGED PER VIEW "V" (WITH CAST MOUNTING BRACKET)					
PIECE	REF.	LOAD CONTACT DESCRIPTION	D. C. VOLTS	COIL REF.	DWG. REF.
221553	A	2F-2B L.V. Sil. Plat. to Sil. Plat.	8-12	8	C-9376-14
221554	Aa	2F-2B H.B. Tung. to Tung.	8-12	8	C-9376-14
221556	Ab	4F-4B H.V. Tung. to Tung.	8-12	8	C-9376-14
221558	Ac	4F-4B L.V. Sil. Plat. to Sil. Plat.	8-12	8	C-9376-14
221560	Ad	2F-2B H.V. Tung. to Tung. 2F-2B L.V. Sil. Plat. to Sil. Plat.	8-12	8	C-9376-14
221563	Ae	1F-1B L.V. Sil. Plat. to Sil. Plat. 1F-1B H.V. Tung. to Tung.	8-12	8	C-9376-14
222332	Af	2F-2B L.V. Sil. Plat. to Sil. Plat.	2.0	8a	C-9376-14
226450	Ag	4F-4B L.V. Sil. Plat. to Sil. Plat.	2.0	8a	C-9376-14
230324	Ah	2F-2B L.V. Sil. Plat. to Sil. Plat.	8	8b	C-9376-14
244597	Aj	4F-4B L.V. Sil. Plat. to Sil. Plat.	8	8b	C-9376-14
252512	Ak	2F-2B L.V. Sil. Plat. to Sil. Plat.	4	8c	C-9376-14
252513	Am	4F-4B L.V. Sil. Plat. to Sil. Plat.	4	8c	C-9376-14
STYLE "DM" CODE TRANSMITTER COMPLETE (180-CODE) WITH ___F - ___B LOAD CONTACTS AND ONE SIL. PLAT. TO SIL. PLAT. DRIVE CONTACT. ARMATURE ADJUSTING WEIGHTS ARRANGED PER VIEW "W" (WITH CAST MOUNTING BRACKET)					
221552	B	2F-2B L.V. Sil. Plat. to Sil. Plat.	8-12	8	C-9376-14
221555	Ba	2F-2B H.V. Tung. to Tung.	8-12	8	C-9376-14
221557	Bb	4F-4B H.V. Tung. to Tung.	8-12	8	C-9376-14

UNION SWITCH & SIGNAL CO.

STYLE "DM" CODE TRANSMITTER COMPLETE (180-CODE) WITH ___F - ___B LOAD CONTACTS AND ONE SIL. PLAT. TO SIL. PLAT. DRIVE CONTACT. ARMATURE ADJUSTING WEIGHTS ARRANGED PER VIEW "W" (WITH CAST MOUNTING BRACKET)

PIECE	REF.	LOAD CONTACT DESCRIPTION	D.C. VOLTS	COIL REF.	DWG. REF.
221559	Bc	4F-4B L.V. Sil. Plat. to Sil. Plat.	8-12	8	C-9376-14
221561	Bd	2F-2B H.V. Tung. to Tung. 2F-2B L.V. Sil. Plat. to Sil. Plat.	8-12	8	C-9376-14
221562	Be	1F-1B L.V. Sil. Plat. to Sil. Plat. 1F-1B H.V. Tung. to Tung.	8-12	8	C-9376-14
222331	Bf	2F-2B L.V. Sil. Plat. to Sil. Plat.	2.0	8a	C-9376-14
226449	Bg	4F-4B L.V. Sil. Plat. to Sil. Plat.	2.0	8a	C-9376-14
230954	Bh	2F-2B L.V. Sil. Plat. to Sil. Plat.	8	8b	C-9376-14
244596	Bj	4F-4B L.V. Sil. Plat. to Sil. Plat.	8	8b	C-9376-14
255720	Bk	2F-2B L.V. Sil. Plat. to Sil. Plat.	4	8c	C-9376-14
255721	Bm	4F-4B L.V. Sil. Plat. to Sil. Plat.	4	8c	C-9376-14

PIECE	REF.	DESCRIPTION	DWG. REF.
33872	3	GASKET	8078-76
219999	8	COIL COMPLETE, 55-Ohms	8133-542
222330	8a	COIL COMPLETE, 1.0-Ohm	8133-542
230955	8b	COIL COMPLETE, 23-Ohms	8133-542
253063	8c	COIL COMPLETE, 5.7-Ohms	8133-542
175630	9	WASHER	7828-374
187757	12	RECTIFIER COMPLETE	12746-1
	13	1/4 in. HEX. S. JAM NUT (Tin Pl.)	
	14	1/4 in. PH. BZ. LOCK WASHER (Int. Teeth) (N.P.)	
73099	15	WASHER	7826-66
105713	17	NUT	12770-1
219560	18	STUD	8114-972
38448	19	WASHER	7826-98
109842	20	NAME PLATE for Refs. A, Af, Ah, Ak, B, Bf, Bh and Bk	8225-541
109843	20a	NAME PLATE for Refs. Aa and Ba	8225-541

UNION SWITCH & SIGNAL CO.

PIECE	REF.	DESCRIPTION	DWG. REF.
109844	20b	NAME PLATE for Refs. Ab and Bb	8225-541
109845	20c	NAME PLATE for Refs. Ac, Ag, Aj, Bc, Bg and Bj	8225-541
109846	20d	NAME PLATE for Refs. Ad and Bd	8225-541
217533	20e	NAME PLATE for Refs. Ae and Be	8225-541
	21	MACHINE SCREW, No. 6-40 x 3/16 in. Rd. Hd. Br. (N.P.)	
125249	22	GLASS COVER	8163-96
	23	BASE WITH VENTILATOR Ref. 24 and GASKET Ref. 3	10937-9
107557	23a	BASE WITH VENTILATOR Ref. 24 (without gasket)	10937-9
34340	24	VENTILATOR	C-7459-6
107614	28	LOCKING PLATE	9999-1558
	29	MACHINE SCREW, No. 6-40 x 3/8 in. Fil. Hd. S. (Tin Pl.)	
	30	MACHINE SCREW, No. 10-30 x 5/16 in. Rd. Hd. S. (Tin Pl.) with No. 10 Ph. Bz. Lock Washer (Int. Teeth) (N.P.)	
	31	3/16 in. x 5/16 in. RD. HD. I. RIVET (Tin Pl.) Replaces Shipping Screw Ref. 31a when Transmitter is put into service.	
107615	31a	SHIPPING SCREW. Used when Transmitter is being shipped, replaced by Ref. 31 when Transmitter is placed in service	8098-1133
107882	32	WIRE CLAMP	11893-899
109049	33	ADJUSTING WEIGHT ("Y" - .032 in.)	9672-223
109050	34	ADJUSTING WEIGHT ("Y" - .0641 in.)	9672-223
109051	35	ADJUSTING WEIGHT ("Y" - 1/8 in.)	9672-223
248093	36	SCREW (9/16 in. long) with No. 10 Ph. Bz. Lock Washer (N.P.)	8098-850
216532	36a	SCREW (5/16 in. long) with No. 10 Ph. Bz. Lock Washer (N.P.)	8098-850
216533	36b	SCREW (7/16 in. long) with No. 10 Ph. Bz. Lock Washer (N. P.)	8098-850
221662	37	WALL MOUNTING BRACKET (Not shown)	12404-42
242059	38	CORE	8101-407
	39	SCREW, Ref. 39a with No. 8 Ph. Bz. Lock Washer (N.P.)	
139462	39a	SCREW ONLY	8098-491
250487	40	WASHER	8112-96
	41	MACHINE SCREW, No. 10-30 x 3/4 in. Fil. Hd. S. (Tin Pl.) with Washer Ref. 42	

UNION SWITCH & SIGNAL CO.

PIECE	REF.	DESCRIPTION	DWG. REF.
73493	42	WASHER	7826-78
241075	43	BRACKET (CAST)	C-9377-20
250530	44	BUSHING	8350-1009
250531	45	BUSHING	8350-1009
250532	46	POLE PIECE	8250-133
	47	SCREW Ref. 47a with No. 8 Ph.Bz. Lock Washer (Int. Teeth) (N.P.)	
77785	47a	SCREW ONLY	8098-1404
244067	48	ARMATURE EXTENSION (For 120 Code Transmitters)	11893-1028
109741	50	POLE PIECE COMPLETE	8250-121
195397	51	WASHER (Used only with 180 Code Transmitters)	7828-368
	52	SCREW Ref. 52a with No. 8 Ph. BZ. Lock Washer (N.P.)	
107552	52a	SCREW ONLY	8098-305
107509	53	CORE	8101-401
	54	SCREW Ref. 54a with No. 10 Ph. Bz. Lock Washer (Int. Teeth) (N.P.)	
135060	54a	SCREW ONLY	8098-1147
219874	55	SPACER	8350-940
	56	MACHINE SCREW, No. 10-30 x 8 in. Fil. Hd. S. (Tin Pl.)	
139539	57	WASHER	7828-346
107409	58	BRACKET COMPLETE (Sheet Metal)	C-9377-14
140571	59	PIN	8097-802

PLATE W-9B

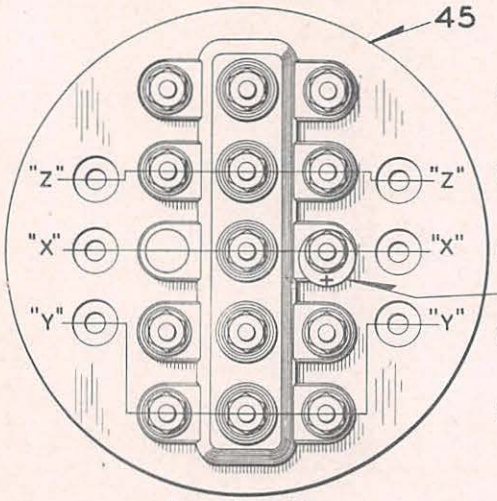

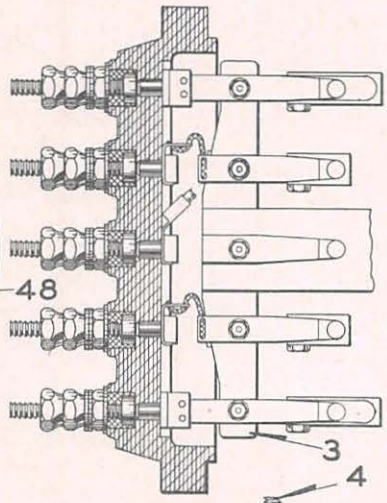

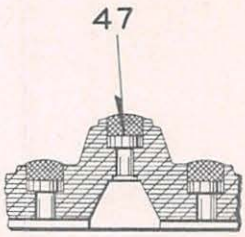

METHOD OF PLUGGING HOLES

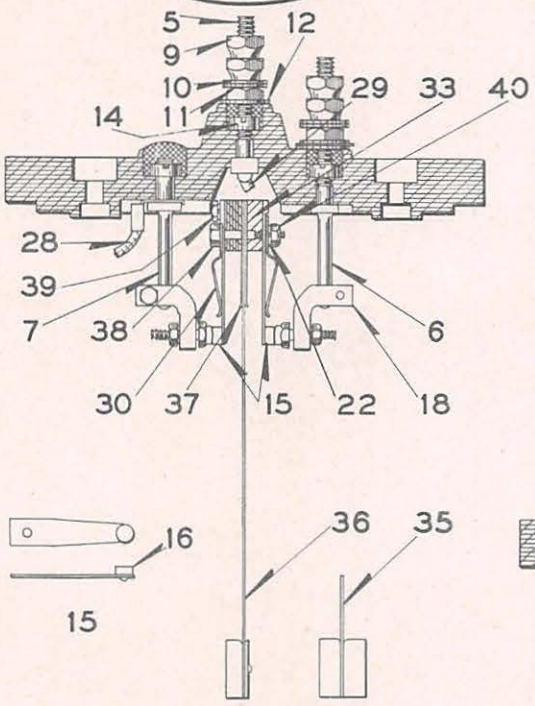

SEC."X - X"

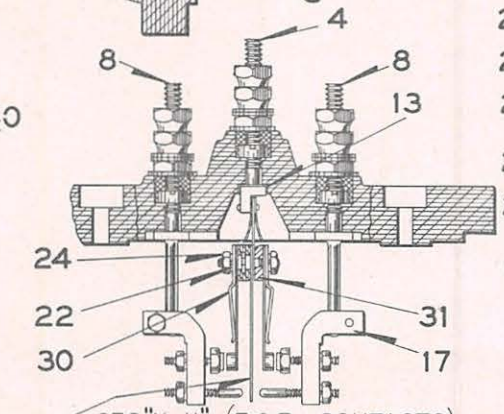

SEC."Y-Y" (F.& B. CONTACTS)

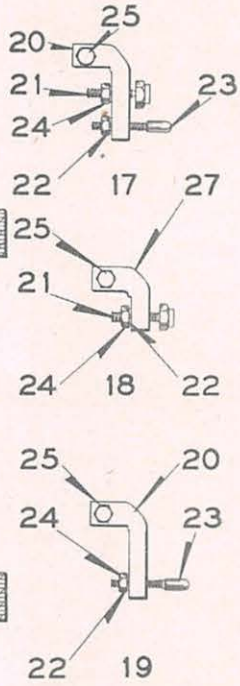

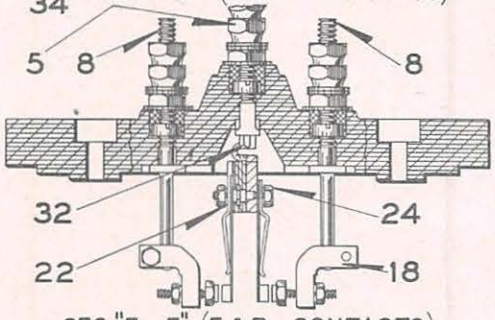

SEC."Z - Z" (F.& B. CONTACTS)

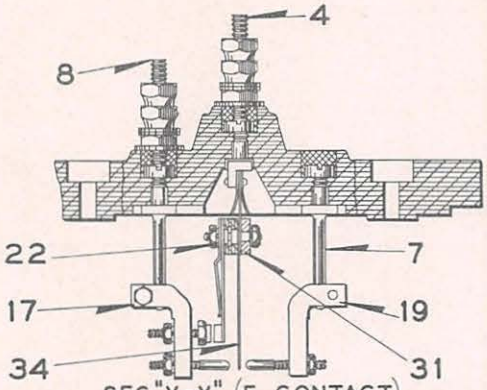

SEC."Y-Y" (F. CONTACT)

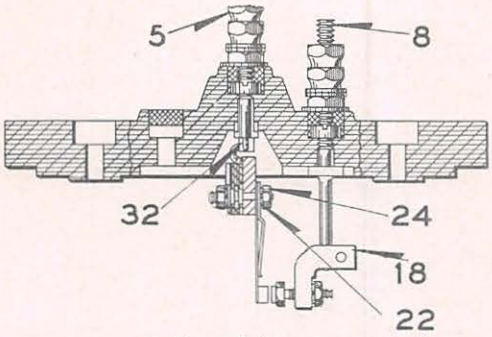

SEC."Z-Z" (B. CONTACT)

TOP PLATES FOR STYLE "DM" CODE TRANSMITTER

6-30-41 3-7-45 11-25-46

UNION SWITCH & SIGNAL CO.

CODED TRACK CIRCUIT CONTROL SYSTEM
TOP PLATES AND FITTINGS FOR "DM" CODE TRANSMITTERS

(For complete Code Transmitter refer to Plate W-9A)

Order by Plate, Piece, Reference and Abbreviated Description

PIECE	REF.	DESCRIPTION	DWG. REF.
221035	3	CONTACT SPRING SUPPORT COMPLETE	12770-31
	4	TERMINAL POST WITH SPRING, REINFORCING SPRINGS, NUTS, WASHERS AND NUT LOCK (Inc. 1-4a, 2-9, 2-10, 1-11, 1-12, 1-13 and 1-14)	12451-
107425	4a	TERMINAL POST WITH SPRING AND REINFORCING SPRINGS (Without Nuts and Washers)	8094-2424
	5	TERMINAL POST WITH NUTS AND WASHERS (Inc. 1-5a, 2-9, 2-10, 1-11, 1-12 and 1-14)	12451-
130200	5a	TERMINAL POST ONLY	8094-1192
	6	TERMINAL POST WITH NUTS AND WASHERS (Inc. 1-6a, 2-9, 3-10, 1-11, 1-12 and 1-14)	12451-
108825	6a	TERMINAL POST ONLY	8094-2410
	7	TERMINAL POST WITH NUTS AND WASHERS (Inc. 1-7a and 1-14)	12451-
108826	7a	TERMINAL POST ONLY	8094-2410
	8	TERMINAL POST WITH NUTS AND WASHERS (Inc. 1-8a, 2-9, 2-10, 1-11, 1-12 and 1-14)	12451-
102493	8a	TERMINAL POST ONLY	8094-2368
29101	9	NUT	8109-193
29102	10	WASHER	7828-139
29103	11	NUT	8109-194
69705	12	WASHER	7828-287
209796	13	NUT LOCK	8486-405
69706	14	NUT	8109-383
224185	15	CONTACT SPRING WITH TUNGSTEN TIP	8385-2540
224184	15a	CONTACT SPRING WITH SIL. PLAT. TIP	8385-2540
162642	16	TUNGSTEN TIP for Ref. 15	8341-317

UNION SWITCH & SIGNAL CO.

PIECE	REF.	DESCRIPTION	DWG. REF.
193651	16a	SIL. PLAT. TIP for Ref. 15a	8341-534
220938	17	CONTACT POST WITH TUNGSTEN TIP	8094-2426
220939	17a	CONTACT POST WITH SIL. PLAT. TIP	8094-2426
109102	18	CONTACT POST WITH TUNGSTEN TIP	8094-2413
109103	18a	CONTACT POST WITH SIL. PLAT. TIP	8094-2413
223731	19	BACK STOP	8094-2438
220921	20	CONTACT SUPPORT	C-9377-17
102510	21	CONTACT POST WITH TUNGSTEN TIP	8094-2369
102511	21a	CONTACT POST WITH SIL. PLAT. TIP	8094-2369
	22	LOCK WASHER, No. 6 Ph. Bz. (Int. Teeth) (N.P.)	
220951	23	STOP PIN	8098-1450
1505	24	NUT	8109-11
211046	25	SCREW	8098-1437
102524	27	CONTACT SUPPORT	C-9453-5
260176	28	LEAD COMPLETE	B-9991-25
260177	29	LEAD COMPLETE	B-9991-18
102525	30	CONTACT SPRING STOP	8735-862
221049	31	SPACER	12538-241
221061	32	TERMINAL CONNECTOR COMPLETE	8244-161
221033	33	SPACER	12538-240
221050	34	STOP SPRING	8735-970
220962	35	OPERATING ARM COMPLETE (120 Code)	12748-26
220961	36	OPERATING ARM COMPLETE (180 Code)	12748-26
221036	37	REINFORCING SPRING	8735-969
221335	38	SCREW	8098-1437
221143	39	SCREW	8098-1437
218836	40	NUT	8265-319
103091	45	TOP PLATE ONLY. For Transmitters having cast mounting brackets	C-9453-6
107062	45a	TOP PLATE ONLY. For Transmitters having sheet metal mounting brackets	C-9453-6
184902	46	WASHER	7828-379
239949	47	DUMMY PLUG	8078-732
142777	48	TAG (marked +)	8988-75

PLATE W-10

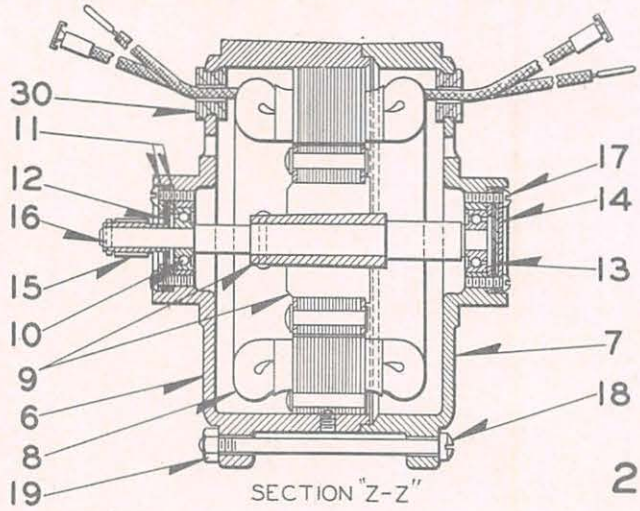

2

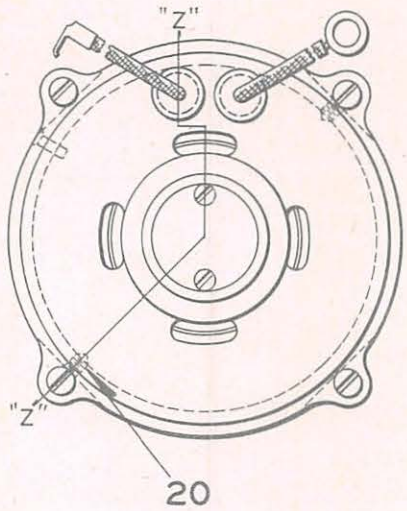

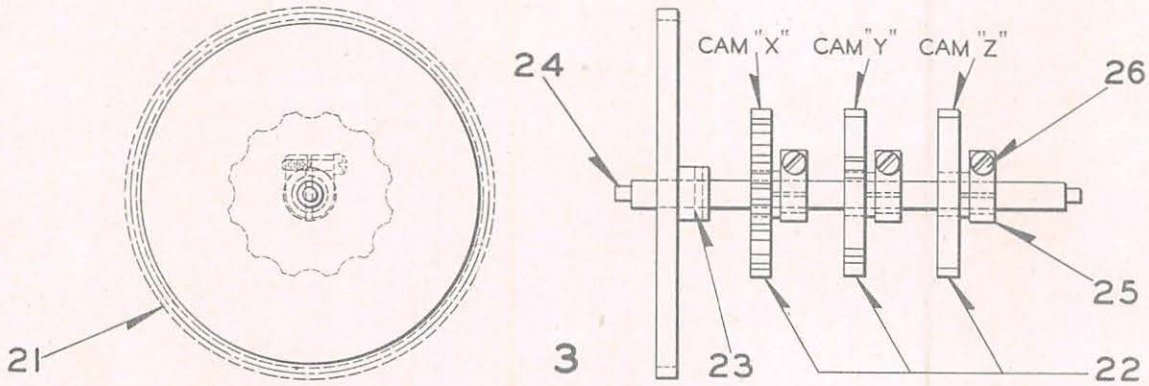

3

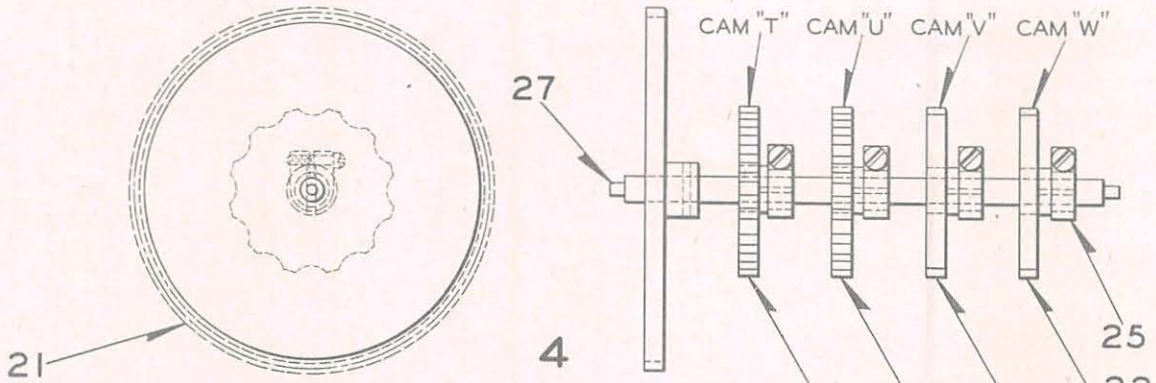

4

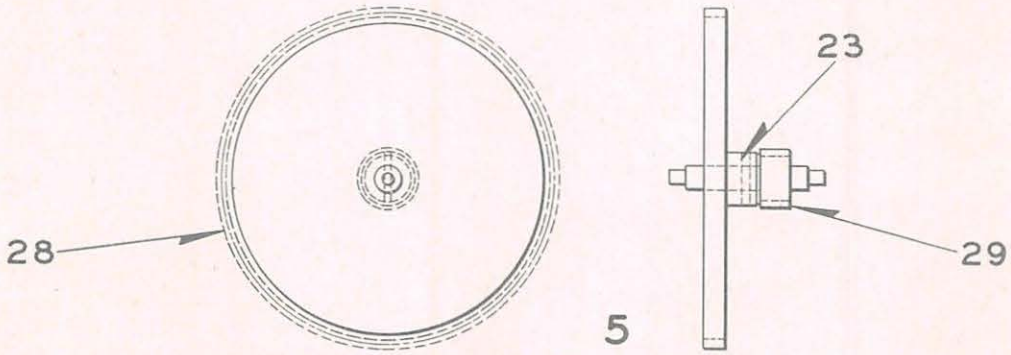

5

4-25-35

MOTOR & CAM ASSEMBLIES

UNION SWITCH & SIGNAL CO.

CODED TRACK CIRCUIT CONTROL SYSTEM
STYLE "M" CODE TRANSMITTER RELAY
3 AND 4 CAM
DETAIL PARTS
MOTOR, GEAR AND CAM SHAFTS AND
GEAR AND PINION SHAFTS

Order by Plate, Piece, Reference and Abbreviated Description

PIECE	REF.	DESCRIPTION	DWG. REF.
150344	2	MOTOR, 110-Volts, 91-2/3 - 100 Cycles	C-9142-10
147223	2a	MOTOR, 110-Volts, 60 - 62 Cycles	C-9142-10
184539	2b	MOTOR, 110-Volts, 91-2/3 Cycles	C-9142-10

GEAR AND CAM SHAFT COMPLETE FOR 3-CAM CODE TRANSMITTER RELAY

PIECE	REF.	GEAR REF.	CAM "X" REF.	CAM "Y" REF.	CAM "Z" REF.	DWG. REF.
193578	3	21	22b	22b	22	C-9142-6
193579	3a	21	22a	22a	22a	C-9142-6
193580	3b	21	22b	22	22	C-9142-6
193581	3c	21	22b	22a	22a	C-9142-6
189795	3d	21	22b	22a	22	C-9142-6
208423	3e	21a	22b	22a	22	C-9142-6
224488	3f	21	22c	22c	22d	C-9142-6
230387	3g	21a	22a	22a	22a	C-9142-6
230388	3h	21a	22b	22a	22a	C-9142-6

GEAR AND CAM SHAFT COMPLETE FOR 4-CAM CODE TRANSMITTER RELAY

PIECE	REF.	GEAR REF.	CAM "T" REF.	CAM "U" REF.	CAM "V" REF.	CAM "W" REF.	DWG. REF.
193587	4	21	22b	22b'	22	22	C-9142-12
193588	4a	21	22b	22a	22a	22	C-9142-12
206078	4b	21	22b	22a	22	22	C-9142-12
230747	4c	21a	22a	22a	22	22b	C-9142-12

GEAR AND PINION SHAFT COMPLETE FOR 3 AND 4-CAM CODE TRANSMITTER RELAY

PIECE	REF.	PINION REF.	GEAR REF.	DWG. REF.
189790	5	29	28	8424-221

UNION SWITCH & SIGNAL CO.

GEAR AND PINION SHAFT COMPLETE FOR 3 AND 4-CAM TRANSMITTER RELAY (cont'd.)

		PINION REF.	GEAR REF.	DWG. REF.
184540	5a	29a	28a	8424-221
208422	5b	29b	28a	8424-221
224489	5c	29c	28a	8424-221
230386	5d	29	28a	8424-221

PIECE	REF.	DESCRIPTION	DWG. REF.
189229	6	HOUSING with Dowel Pin	C-9142-8
147222	7	HEAD	C-9142-8
150343	8	STATOR COMPLETE with Eyelets and Bushings for Ref. 2 and 2b	C-9142-9
147220	8a	STATOR COMPLETE with Eyelets and Bushings for Ref. 2a	C-9142-9
146774	9	ROTOR COMPLETE with Shaft	C-9142-5
	10	BEARING	
139527	11	WASHER	7828-375
139529	12	WASHER	8078-1428
139780	13	WASHER	8078-1428
139528	14	WASHER	7828-375
139530	15	PINION (15-TEETH) for Refs. 2 and 2a	8424-217
184438	15a	PINION (16-TEETH) for Ref. 2b	8424-275
37951	16	PIN for attaching Ref. 15 to Ref. 9	8097-279
	17	MACHINE SCREW, No. 6-40 x 3/8 in. Rd. Hd. S. (N.P.)	
	18	MACHINE SCREW, with Nut Ref. 19	
	18a	MACHINE SCREW ONLY, No. 10-30 x 2-7/8 in. Fil.S. (N.P.)	
183042	19	NUT	8265-126
147251	20	CONE PT. SET SCREW	8098-1157
139534	21	GEAR, 180 teeth	8425-198
139535	21a	GEAR, 169 teeth	8425-199
189773	22	CAM (5 Notches)	9121-167
189775	22a	CAM (8 Notches)	9121-168
189777	22b	CAM (12 Notches)	9121-169
149897	22c	CAM (6 Notches)	9121-119
224490	22d	CAM (2 Notches)	9121-119

UNION SWITCH & SIGNAL CO.

PIECE	REF.	DESCRIPTION	DWG. REF.
37786	23	PIN	8097-279
150342	24	SHAFT	8160-177
	25	CLAMP with Screw Ref. 26	8072-664
139594	25a	CLAMP ONLY for Ref. 25	8072-664
	26	MACHINE SCREW, No. 10-30 x 3/4 in. Fil. Hd. S. (N.P.)	
163491	27	SHAFT	8160-187
139532	28	GEAR, 160 teeth	8425-201
184439	28a	GEAR, 159 teeth	8425-224
189789	29	PINION, 15 teeth	8424-284
139537	29a	PINION, 20 teeth	8424-219
102797	29b	PINION, 23 teeth	8424-295
224492	29c	PINION, 24 teeth	8424-303
139691	30	RUBBER BUSHING for Refs. 8 and 8a	8095-644

11-25-46

PLATE W-15

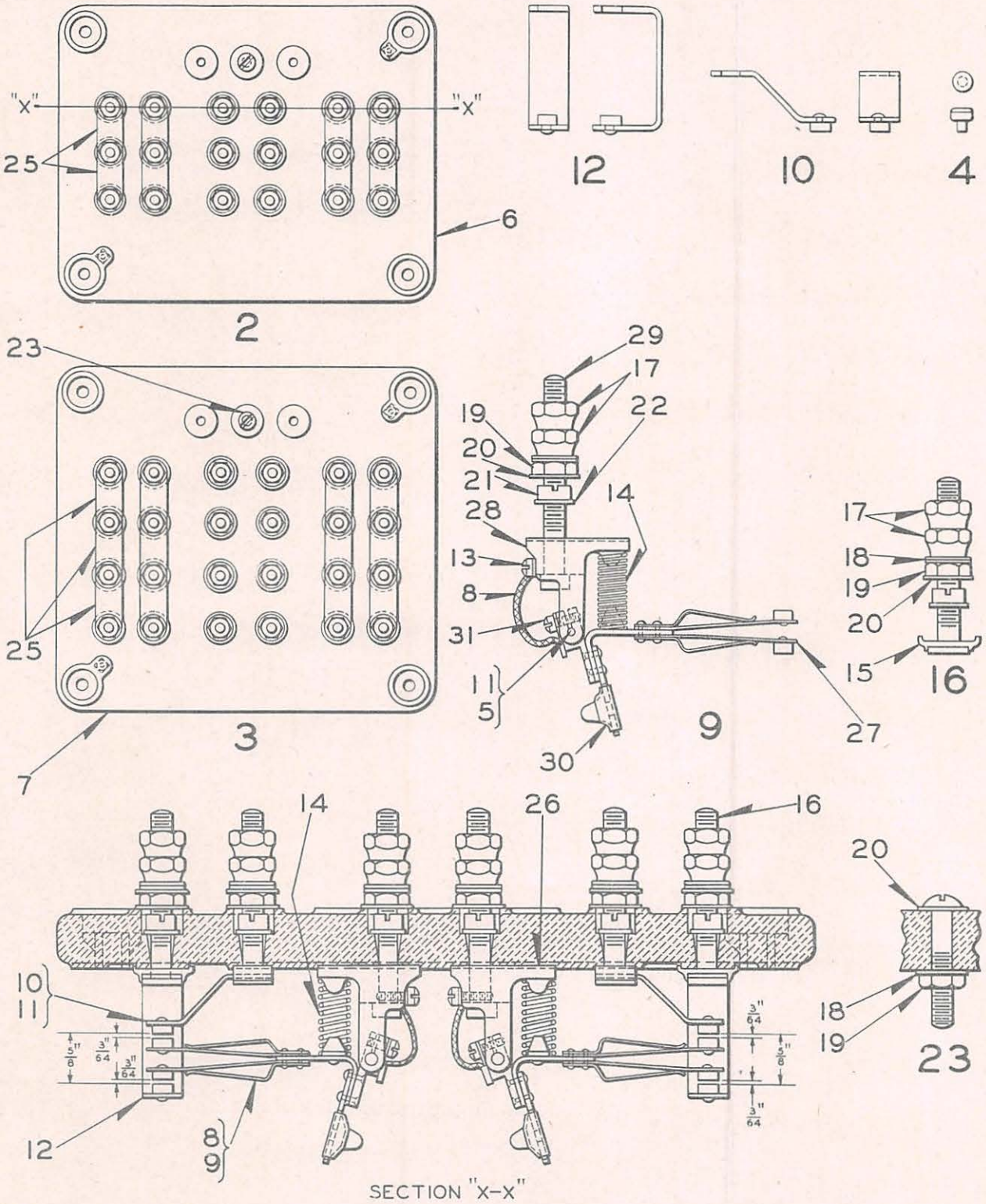

TOP PLATES & CONTACT SPRINGS

2-2-42
4-35

UNION SWITCH & SIGNAL CO.

CODED TRACK CIRCUIT CONTROL SYSTEM
STYLE "M" CODE TRANSMITTER RELAY
3 AND 4 CAM
DETAIL PARTS
CONTACT COMBINATIONS

Order by Plate, Piece, Reference and Abbreviated Description

PIECE	REF.	DESCRIPTION	DWG. REF.
184968	2	CONTACT COMBINATION WITH SIX FRONT AND SIX BACK CONTACTS (1/4 in. diameter tungsten tips on contact springs, fingers and posts)....	C-9146-2
225175	2a	CONTACT COMBINATION WITH SIX FRONT AND SIX BACK CONTACTS (1/4 in. diameter Sil. Plat. tips on contact springs, fingers and posts)...	C-9146-2
229291	2b	CONTACT COMBINATION WITH SIX FRONT AND SIX BACK CONTACTS (1/4 in. diameter tungsten tips on contact springs, fingers and posts on L.H. side and 1/4 in. diameter silver platinum tips on contact springs, fingers and posts on R.H. side).....	C-9146-2
224487	2c	CONTACT COMBINATION WITH SIX FRONT AND SIX BACK CONTACTS (1/4 in. diameter tungsten tips on contact springs, fingers and posts)...	C-9146-2
193586	3	CONTACT COMBINATION WITH EIGHT FRONT AND EIGHT BACK CONTACTS (1/4 in. diameter tungsten tips on contact springs, fingers and posts).....	C-9146-2
230746	3a	CONTACT COMBINATION WITH EIGHT FRONT AND EIGHT BACK CONTACTS (1/4 in. diameter silver platinum tips on contact springs, fingers and posts).....	C-9146-2
162642	4	CONTACT TIP (Tungsten) 1/4 in. diameter.....	8341-317
193651	4a	CONTACT TIP (Sil.Plat.) 1/4 in. diameter.....	8341-534
142899	5	WASHER.....	7828-346
153014	6	TOP PLATE.....	C-9142-11
163429	7	TOP PLATE.....	C-9142-16
133736	8	FLEX. CONNECTOR.....	10934-71
	9	CONTACT SPRING COMPLETE with Terminal Post, Coil Spring, Nuts and Washers (1/4 in. diameter tungsten tips).....	8385-
184951	9a	CONTACT SPRING COMPLETE with Terminal Post, Coil Spring, and Lead Washer (Without Nuts and Washers) (1/4 in. diameter tungsten tips).....	8385-2375
184950	9b	CONTACT SPRING COMPLETE with Terminal Post (without Coil Spring, Nuts and Washers) (1/4 in. diameter tungsten tips).....	8385-2375
	9c	CONTACT SPRING COMPLETE with Terminal Post, Coil Spring, Nuts and Washers (1/4 in. diameter Sil. Plat. tips).....	8385-

UNION SWITCH & SIGNAL CO.

PIECE	REF.	DESCRIPTION	DWG. REF.
	9d	CONTACT SPRING COMPLETE with Terminal Post, Coil Spring, and Lead Washer (Without Nuts and Washers) (1/4 in. diameter Sil. Plat. tips)	8385-2375
225157	9e	CONTACT SPRING COMPLETE with Terminal Post (Without Coil Spring, Nuts and Washers) (1/4 in. diameter Sil. Plat. Tips)	8385-2375
184955	10	FRONT POST COMPLETE with 1/4 in. diameter tungsten tip	8094-2333
199901	10a	FRONT POST COMPLETE with 1/4 in. diameter Sil. Plat. tip	8094-2333
133734	11	PIN	8097-803
184853	12	BACK POST COMPLETE with 1/4 in. diameter tungsten tip	8094-2332
199902	12a	BACK POST COMPLETE with 1/4 in. diameter Sil. Plat. tip	8094-2332
	13	MACHINE SCREW, No. 6-40 x 1/4 in. Fil. Hd. Br. (N.P.)	
142912	14	COIL SPRING	7770-432
29063	15	LOCK WASHER	8486-111
	16	TERMINAL POST COMPLETE with Nuts and Washers (Inc. 1-16a, 1-15, 2-17, 2-18, 1-19, 1-20, 1-21 and 1-22)	12451-
31668	16a	TERMINAL POST ONLY, for Ref. 16	8094-706
29101	17	NUT	8109-193
29102	18	WASHER	7828-139
29103	19	NUT	8109-194
69705	20	WASHER	7828-287
72948	21	NUT	8109-383
70539	22	WASHER	8274-73
	23	MACHINE SCREW COMPLETE with Nut and Washers (Inc. 1-23a, 1-18, 1-19 and 1-20)	12471-
	23a	MACHINE SCREW ONLY, No. 14-24 x 1-3/4 in. Rd. Hd. Br. (N.P.)	
120343	25	CONNECTOR (2-Way)	8064-305
182811	26	SHIM (.003 in. thick)	11893-681
182812	26a	SHIM (.005 in. thick)	11893-681
182813	26b	SHIM (.008 in. thick)	11893-681
184943	27	CONTACT SPRING COMPLETE	8385-2373
141421	28	BRACKET	8094-2138
	29	TERMINAL POST COMPLETE with Nuts and Washers (Inc. 1-29a, 2-17, 2-18, 1-19, 1-20, 1-21 and 1-22)	12451-

UNION SWITCH & SIGNAL CO.

PIECE	REF.	DESCRIPTION	DWG. REF.
153015	29a	TERMINAL POST ONLY, for Ref. 29	8094-2207
	30	CAM FOLLOWER COMPLETE, with Rivets	9121-157
182266	30a	CAM FOLLOWER COMPLETE, (without Rivets)	9121-157
54920	30b	RIVET	10301-1
	31	MACHINE SCREW, No. 6-40 x 3/8 in. Fil. Hd. S. (N.P.)	

11-25-46

PLATE W-16

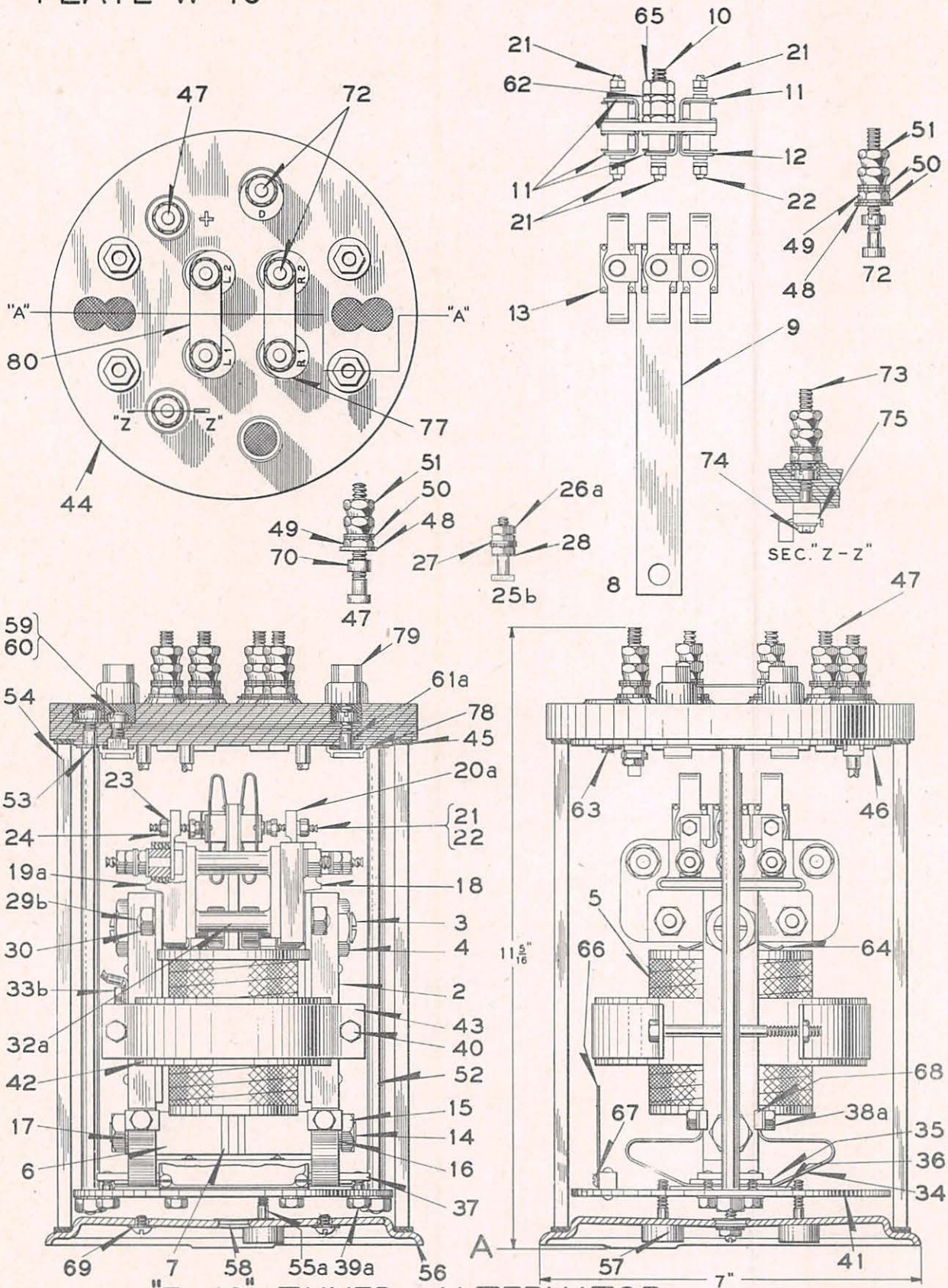

"F-10" TUNED ALTERNATOR

UNION SWITCH & SIGNAL CO.

CODED TRACK CIRCUIT CONTROL SYSTEM
STYLE "F-10" TUNED ALTERNATOR

Order by Plate, Piece, Reference and Abbreviated Description

PIECE	REF.	DESCRIPTION	DWG. REF.
212500	A	STYLE "F-10" TUNED ALTERNATOR, for 12 Volt D.C. operation and tuned for 100 Cycles	C-9358-7
213750	Aa	STYLE "F-10" TUNED ALTERNATOR, for 10-12 Volt D.C. operation and tuned for 60 cycles	C-9358-7
215840	Ab	STYLE "F-10" TUNED ALTERNATOR, for 16 Volt D.C. operation and tuned for 60 cycles	C-9358-7
221113	Ac	STYLE "F-10" TUNED ALTERNATOR, for 16 Volt D.C. operation and tuned for 50 cycles	C-9358-7
239060	Ad	STYLE "F-10" TUNED ALTERNATOR, for 16 Volt D.C. operation and tuned for 100 cycles	C-9358-7
106296	2	CORE COMPLETE	8101-397
106297	3	POLE PIECE	8250-117
34065	4	NUT	8109-228
108884	5	COIL COMPLETE, 1-Ohm, for Ref. A	8133-523
106316	5a	COIL COMPLETE, 2.2-Ohms, for Refs. Aa, Ab and Ac	8133-523
239468	5b	COIL COMPLETE, 1.5-Ohms, for Ref. Ad	8133-523
106298	6	BACK STRAP for Refs. A and Ad	8162-269
107010	6a	BACK STRAP for Refs. Aa, Ab and Ac	8162-269
106769	7	SPACER	7828-415
106315	8	ARMATURE COMPLETE for Refs. A and Ad (Inc. 1-9, 4-11, 1-12 and 12-13) Without tuning nuts Refs. 62 and 65	8157-452
107481	8a	ARMATURE COMPLETE for Refs. Aa and Ab (Inc. 1-9a, 4-11, 1-12 and 12-13) Without tuning Nuts Refs. 62 and 65	8157-458
229939	8b	ARMATURE COMPLETE for Ref. Ac (Inc. 1-9b, 4-11, 1-12 and 12-13) Without Tuning Nuts Refs. 62 and 65 or Tuning Weights Ref. 81	8157-458
250137	9	ARMATURE with one Stud Ref. 10	8157-451
250485	9a	ARMATURE with one Stud Ref. 10a	8157-459
250486	9b	ARMATURE with two Studs Ref. 10a	8157-504

UNION SWITCH & SIGNAL CO.

PIECE	REF.	DESCRIPTION	DWG. REF.
106318	10	STUD for Ref. 9	8114-942
107483	10a	STUD for Refs. 9 and 9b	8114-942
106312	11	CONTACT SPRING with Tungsten Contact Tip for Refs. 8, 8a and 8b	8385-2616
162642	11a	TUNGSTEN CONTACT TIP for Ref. 11	8341-317
106350	12	CONTACT SPRING with Elkonium Contact Tip for Refs. 8, 8a and 8b	8385-2616
181479	12a	ELKONIUM CONTACT TIP for Ref. 12	8341-490
54928	13	RIVET	10301-21
	14	STUD with Nut, Washer and Lock Washer (Inc. 1-14a, 2-15, 1-16 and 1-17)	
106301	14a	STUD ONLY, for Ref. 14	8114-940
106302	15	NUT	8265-70
CN47672	16	3/8 in. S. LOCK WASHER (Tin Pl.)	
44407	17	WASHER	7828-184
106299	18	TERMINAL BOARD arranged for three terminal posts (Used previous to 12-2-43, not shown)	9968-1246
264971	18a	TERMINAL BOARD arranged for three terminal posts (Used since 12-2-43, as shown)	C-9387-6
106300	19	TERMINAL BOARD arranged for two terminal posts (Used previous to 12-2-43, not shown)	9968-1246
242467	19a	TERMINAL BOARD arranged for two terminal posts (Used since 12-2-43, as shown)	9968-1246
106303	20	CONTACT ARM for use with Terminal Boards Refs. 18 and 19 (Used previous to 12-2-43)	12748-10
264959	20a	CONTACT ARM for use with Terminal Boards Refs. 18a and 19a (Used since 12-2-43)	12748-10
221114	21	CONTACT POST with Tungsten Tip	8094-2369
106317	22	CONTACT POST with Elkonium Tip	8094-2369
CN47708	23	LOCK WASHER, No. 6 Ph. Bz. (Int. Teeth) (N.P.)	
1505	24	NUT	8109-11
	25	TERMINAL POST with Nuts, Washers and Lock Washer (Inc. 1-25a, 3-26, 3-27 and 1-28) Used with Terminal Boards Refs. 18 and 19	12451-
213169	25a	TERMINAL POST ONLY (No. 10-30 threads)	8094-2392
	25b	TERMINAL POST with Nuts, Washers and Lock Washer (Inc. 1-25c, 3-26a, 2-27 and 1-28) Used with Terminal Boards Refs. 18a and 19a	12451-
264968	25c	TERMINAL POST ONLY (No. 10-32 threads)	8094-530
26545	26	NUT (No. 10-30 tap) For Ref. 25	8109-181

UNION SWITCH & SIGNAL CO.

PIECE	REF.	DESCRIPTION	DWG. REF.
30086	26a	NUT (No. 10-32 tap) For Ref. 25b	8265-111
53	27	WASHER	7828-5
CN47710	28	LOCK WASHER, No. 10 Ph. Bz. (Int. Teeth) (N.P.)	
	29	STUD Ref. 29a with two Nuts Ref. 30, two 1/4 in. Ph. Bz. Lock Washers (Int. Teeth) (N.P.) and two Washers Ref. 31. For use with Terminal Boards Refs. 18 and 19	
212580	29a	STUD ONLY for Refs. 29 and 29b	8098-1097
	29b	STUD Ref. 29a with two Nuts Ref. 30 and two 1/4 in. Ph. Bz. Lock Washers (Int. Teeth) (N.P.) For use with Terminal Boards Refs. 18a and 19a	
33217	30	NUT	8265-114
50252	31	WASHER for Ref. 29 (Not shown)	7828-184
212579	32	SPACER. Used with Terminal Boards Refs. 18 and 19	8350-856
223474	32a	SPACER. As shown. Used with Terminal Boards Refs. 18a and 19a	C-9387-5
	33	SCREW Ref. 33a with Washer Ref. 27 and No. 10 Ph. Bz. Lock Washer (Int. Teeth) (N.P.) Used previous to 8-23-46	
135060	33a	SCREW ONLY (No. 10-30 threads) Used previous to 8-23-46	8098-1147
	33b	SCREW Ref. 33c with Washer Ref. 27 and No. 10 Ph. Bz. Lock Washer (Int. Teeth) (N.P.) Used since 8-23-46)	
264972	33c	SCREW ONLY (No. 10-32 threads) Used since 8-23-46	8098-51
106304	34	SUPPORTING SPRING	8735-910
106305	35	INSULATION	8750-2921
106306	36	INSULATION	8750-2921
106321	37	CLAMPING PLATE COMPLETE	9999-1523
212653	38	SCREW (No. 10-30 threads) with No. 10 Ph. Bz. Lock Washer (Int. Teeth) (N.P.) (Used previous to 8-23-46)	8098-476
265005	38a	SCREW (No. 10-32 threads) with No. 10 Ph. Bz. Lock Washer (Int. Teeth) (N.P.) (Used since 8-23-46)	8098-1482
212658	39	SCREW (No. 10-30 threads) with No. 10 Ph. Bz. Lock Washer (Int. Teeth) (N.P.) (Used previous to 8-23-46)	8098-1147
264973	39a	SCREW (No. 10-32 threads) with No. 10 Ph. Bz. Lock Washer (Int. Teeth) (N.P.) (Used since 8-23-46)	8098-51
	40	SCREW Ref. 40a (No. 10-32 threads) with No. 10-32 Hex. Nut	
213690	40a	SCREW ONLY (No. 10-32 threads)	8098-51
106360	41	BASE PLATE COMPLETE	12538-205
197182	42	PERMANENT MAGNET	12586-11

UNION SWITCH & SIGNAL CO.

PIECE	REF.	DESCRIPTION	DWG. REF.
197183	43	CLAMP	10914-736
106309	44	TOP PLATE	C-9453-2
33872	45	GASKET	8078-76
106310	46	TERMINAL POST LOCK	8750-2922
	47	TERMINAL POST with Nuts and Washers (Inc. 1-47a, 1-48, 1-49, 2-50, 2-51 and 1-70)	12451-
130593	47a	TERMINAL POST ONLY	8094-1192
69705	48	WASHER	7828-287
29103	49	NUT	8109-194
29102	50	WASHER	7828-139
29101	51	NUT	8109-193
	52	STUD with Nuts and Washers (Inc. 1-52a, 1-30, 2-53, 1-70 and one 1/4 inch Ph. Bz. Lock Washer (Int. Teeth) (N.P.)	
106313	52a	STUD ONLY	8114-941
84	53	WASHER	7828-6
212604	54	GLASS CASE	8163-96
	55	MACHINE SCREW, No. 10-30 x 1 in. Flat Hd. S. (Tin Pl.) (Used previous to 8-23-46)	
	55a	MACHINE SCREW, No. 10-32 x 1 in. Flat Hd. S. (Tin Pl.) (Used since 8-23-46)	
106323	56	BASE with Ventilator and Collars	10937-7
125240	57	COLLAR for Ref. 56	8350-530
34340	58	VENTILATOR for Ref. 56	C-7459-6
	59	MACHINE SCREW, No. 14-24 x 1/2 in. Fil. Hd. Br. (N.P.) with Nut Ref. 60.	
410442	60	NUT	
	61	MACHINE SCREW, No. 14-24 x 3/4 in. Fil. Hd. Br. (N.P.) with Washer Ref. 50, 1/4 in. Ph. Bz. Lock Washer (Int. Teeth) (N.P.) and Nut Ref. 62 (Used previous to 6-29-43)	
	61a	TERMINAL POST with Nut, Terminal Post Lock and Insulated Nut. As shown. (Used since 6-29-43) (Inc. 1-61b, 1-70, 1-78 and 1-79)	12451-
48854	61b	TERMINAL POST ONLY	8094-797
186398	62	NUT for Refs. 61 and 63	8109-476
	63	MACHINE SCREW, No. 14-24 x 5/8 in. Fil. Hd. Br. (N.P.) with Washer Ref. 50, Nut Ref. 62, and 1/4 in. Ph. Bz. Lock Washer (Int. Teeth) (N.P.)	

UNION SWITCH & SIGNAL CO.

PIECE	REF.	DESCRIPTION	DWG. REF.
106329	64	COIL RETAINING SPRING	8735-911
31670	65	NUT	8109-218
106359	66	NAME PLATE	8225-531
	67	MACHINE SCREW, No. 6-40 x 1/4 in. Rd. Hd. Br. (N.P.)	
106408	68	NUT LOCK	8486-429
	69	MACHINE SCREW, No. 14-24 x 3/8 in. Rd. Hd. S. (Tin Pl.) with 1/4 in. Ph. Bz. Lock Washer (Int. Teeth) (N.P.)	
72948	70	NUT	8109-383
	71	SHIPPING SCREW with Washer Ref. 27, Washer Ref. 71b and No. 10-32 Hex. Nut (Tin Pl.) used for shipping only (Not shown)	
106319	71a	SHIPPING SCREW ONLY	8098-1445
185211	71b	WASHER	8078-1496
	72	TERMINAL POST with Nuts and Washers (Inc. 1-47a, 1-48, 1-49, 3-50, 2-51 and 1-70)	12451-
	73	TERMINAL POST with Nuts, Washers and Lock Washer (Inc. 1-73a, 1-48, 1-49, 2-50, 2-51, 1-70, 1-74, 1-75 and one No. 10 Ph. Bz. Lock Washer (Int. Teeth) (N.P.)	12451-
189159	73a	TERMINAL POST ONLY, for Ref. 73	8094-982
189165	74	SCREW	8098-403
159694	75	LOCK WASHER	8486-379
142777	77	TAG (Orders should specify marking desired)	8988-75
29063	78	TERMINAL POST LOCK	8486-111
105713	79	INS. NUT	12770-1
170656	80	CONNECTOR	8064-305
229944	81	TUNING WEIGHT for Ref. Ac (Not shown)	9672-228

PLATE W-17

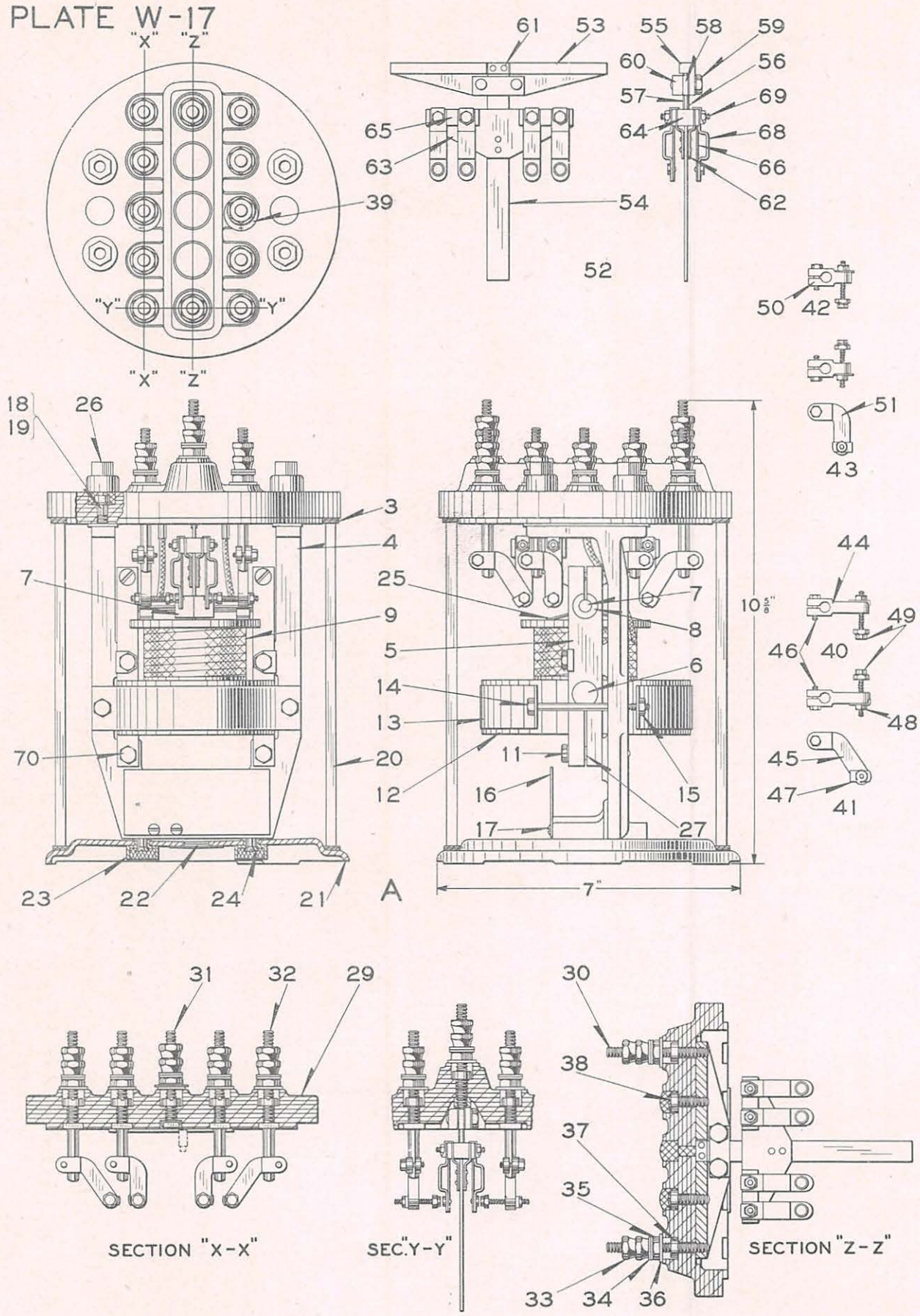

11-25-46
2-2-42

TUNED ALTERNATOR REPEATER

UNION SWITCH & SIGNAL CO.

CODED TRACK CIRCUIT CONTROL SYSTEM

TUNED ALTERNATOR REPEATER

Plug Couplers for Tuned Alternator Repeater will be found on Plate W-75.

If Wall Mounting Bracket Ref. 28 is desired, orders should so state.

Order by Plate, Piece, Reference and Abbreviated Description

PIECE	REF.	DESCRIPTION	DWG. REF.
224462	A	TUNED ALTERNATOR REPEATER with 4F-4B High Voltage Tungsten to Tungsten Contacts	C-16788-1
33872	3	GASKET	8078-76
197373	4	SUPPORT BRACKET with Dowel Pin	C-9453-3
225433	5	CORE	8101-404
225436	6	POLE PIECE	8250-127
225437	7	POLE PIECE	8250-128
225439	8	BUSHING	8350-969
225434	9	COIL	8133-553
	11	LOCK WASHER, No. 10 Ph. Bz. (Int. Teeth) (N.P.)	
197182	12	PERMANENT MAGNET	12586-11
197183	13	CLAMP	10914-736
	14	SCREW with Nut Ref. 15	12471-
225685	14a	SCREW ONLY for Ref. 14	8098-1482
49	15	NUT	8109-1
225663	16	NAME PLATE	8225-589
	17	MACHINE SCREW, No. 6-40 x 3/16 in. Rd. Hd. Br. (N.P.)	
219560	18	STUD	8114-972
38448	19	WASHER	7826-98
125249	20	GLASS COVER	8163-96
207441	21	BASE with Ventilator Ref. 22, Collars Ref. 23 and Gasket Ref. 3	10937-7
34340	22	VENTILATOR for Ref. 21	C-7459-6
125240	23	COLLAR for Ref. 21	8350-530

UNION SWITCH & SIGNAL CO.

PIECE	REF.	DESCRIPTION	DWG. REF.
106329	25	COIL RETAINER	8735-911
105713	26	INSULATED NUT	12770-1
44618	27	WASHER	7828-184
221662	28	WALL MOUNTING BRACKET (Not shown)	12404-42
103091	29	TOP PLATE ONLY	C-9453-6
	30	TERMINAL POST WITH NUTS AND WASHERS (Inc. 1-30a, 2-33, 2-34, 1-35, 1-36 and 1-37)	12451-
225432	30a	TERMINAL POST ONLY	8098-1454
	31	TERMINAL POST WITH NUTS AND WASHERS (Inc. 1-31a, 2-33, 3-34, 1-35, 1-36 and 1-37)	12451-
130200	31a	TERMINAL POST ONLY	8094-1192
	32	TERMINAL POST WITH NUTS AND WASHERS (Inc. 1-32a, 2-33, 2-34, 1-35, 1-36 and 1-37)	12451-
225584	32a	TERMINAL POST ONLY	8094-2433
29101	33	NUT	8109-193
29102	34	WASHER	7828-139
29103	35	NUT	8109-194
69705	36	WASHER	7828-287
72948	37	NUT	8109-383
	38	MACHINE SCREW, No. 14-24 x 5/8 in. Fil. Hd. S. (Tin Pl.)	
142777	39	TAG (Orders should specify marking desired)	8988-75
225599	40	R. H. CONTACT POST COMPLETE (Inc. 1-44, 1-46, 1-47, 1-48 & 1-49)	8094-2434
225600	41	L. H. CONTACT POST COMPLETE (Inc. 1-45, 1-46, 1-47, 1-48 & 1-49)	8094-2434
225601	42	R. H. CONTACT POST COMPLETE (Inc. 1-50, 1-46, 1-47, 1-48 & 1-49)	8094-2435
225602	43	L. H. CONTACT POST COMPLETE (Inc. 1-51, 1-46, 1-47, 1-48 & 1-49)	8094-2435
225429	44	R. H. CONTACT POST (Bracket)	8094-2431
225452	45	L. H. CONTACT POST (Bracket)	8094-2431
211046	46	SCREW	8098-1437
134516	47	LOCK WASHER	8486-368
1505	48	NUT	8109-11
225598	49	CONTACT POST WITH TUNGSTEN TIP	8094-2369

UNION SWITCH & SIGNAL CO.

PIECE	REF.	DESCRIPTION	DWG. REF.
225430	50	R. H. CONTACT POST (Bracket)	8094-2432
225453	51	L. H. CONTACT POST (Bracket)	8094-2432
225451	52	ARMATURE COMPLETE	8157-482
225438	53	ARMATURE BRACKET	8303-133
225435	54	ARMATURE	8157-481
225446	55	ARMATURE PLATE	9999-1733
225442	56	SPRING	8735-983
225443	57	SPRING	8735-984
225428	58	SEPARATOR	8072-909
	59	SCREW, Ref. 59a with 1/4 in. S. Lock Washer (Tin Pl.)	12471-
225505	59a	SCREW ONLY	8098-1455
225445	60	PLATE	9999-1732
	61	RIVET, 3/32 in. x 1/2 in. Csk. Hd. I. (Tin. Pl.)	
225441	62	SPRING	8735-982
225448	63	CONTACT SPRING SUPPORT	11893-945
225450	64	SPACER	12538-247
225449	65	PLATE	12538-246
225454	66	CONTACT SPRING WITH TUNGSTEN TIP	8385-2711
162642	67	TUNGSTEN TIP for Ref. 66	8341-317
225447	68	CONTACT SPRING STOP	11893-944
	69	SCREW with two Lock Washers Ref. 47 and two Nuts Ref. 48	12471-
225431	69a	SCREW ONLY, for Ref. 69	8098-1453
263590	70	SCREW	8098-1482
	71	MACHINE SCREW, No. 10-32 x 3/4 in. Flat Hd. S. (Tin Pl.)	

PLATE W-18

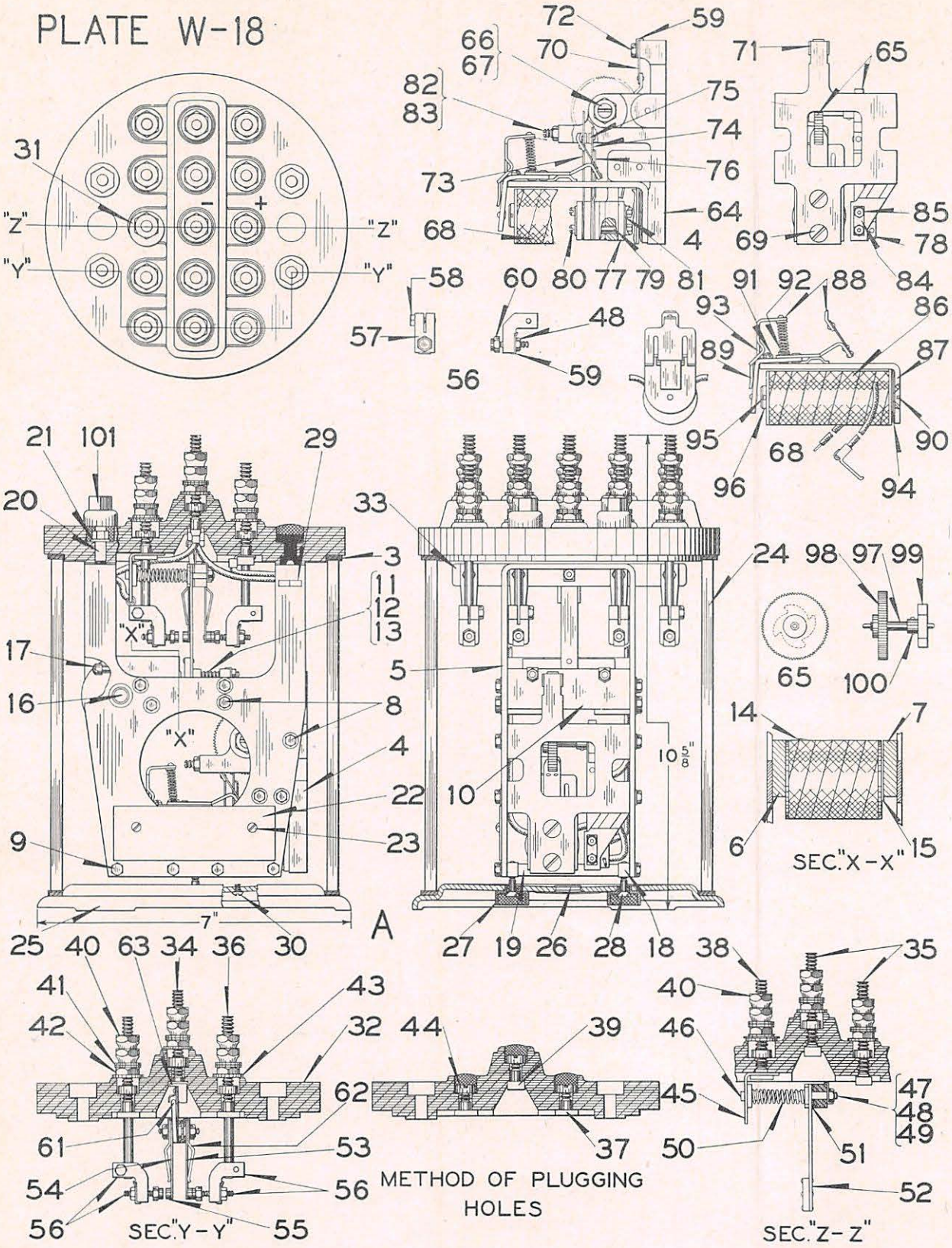

STYLE "CDM" CODE CONVERTER

2-2-42
9-9-40

UNION SWITCH & SIGNAL CO.

CODED TRACK CIRCUIT CONTROL SYSTEM

STYLE "CDM" CODE CONVERTER

Plug Couplers for "CDM" Code converter will be found on Plate W-75.

If Wall Mounting Bracket Ref. 102 is desired, orders should so state.

Order by Plate, Piece, Reference and Abbreviated Description

PIECE	REF.	DESCRIPTION	DWG. REF.
215558	A	STYLE "CDM" CODE CONVERTER with 1F-1B Low Voltage Sil. Plat. to Sil. Plat. Contact and 1F-1B High Voltage Tungsten to Tungsten Contact..	C-16744-2
33872	3	GASKET	8078-76
108582	4	TIMING UNIT COMPLETE	C-16747-2
108371	5	BRACKET with Studs	C-16747-3
108495	6	L. H. POLE PIECE with Core Pin	8250-123
108497	7	R. H. POLE PIECE with Core Pin	8250-123
	8	SCREW, Ref. 8a, with No. 8 Ph. Bz. Lock Washer (Int. Teeth) (N.P.)	12471-
107552	8a	SCREW ONLY, No. 8-36 x 3/8 in.	8098-305
	9	SCREW, Ref. 9a, with No. 8 Ph. Bz. Lock Washer (Int. Teeth) (N.P.)	12471-
107553	9a	SCREW ONLY, No. 8-36 x 3/4 in.	8098-305
107510	10	PLATE	12538-219
	11	BACK STOP SCREW, Ref. 11a, with Nut Ref. 12 and Lock Washer Ref. 13	12471-
107511	11a	BACK STOP SCREW ONLY	8098-1131
32498	12	NUT	8109-223
	13	LOCK WASHER, No. 8 Ph. Bz. (Int. Teeth) (N.P.)	
108586	14	COIL, 200-Ohms	8133-531
210515	15	WASHER	8078-1503
107509	16	CORE	8101-401
	17	MACHINE SCREW, No. 8-36 x 3/4 in. Fil. Hd. S. (Tin Pl.)	
108587	18	BAR	12538-221
214406	19	SPACER	8350-940
219560	20	SCREW, with Washer Ref. 21	8114-972
38448	21	WASHER	7826-98

UNION SWITCH & SIGNAL CO.

PIECE	REF.	DESCRIPTION	DWG. REF.
108499	22	NAME PLATE	8225-549
	23	SCREW, No. 4 x 3/16 in. Rd. Hd. Hardened (Tin Pl.)	
125249	24	GLASS COVER	8163-96
107565	25	BASE WITH VENTILATOR, GASKET AND COLLARS	10937-3
34340	26	VENTILATOR for Ref. 25	C-7459-6
125240	27	COLLAR for Ref. 25	8350-530
	28	MACHINE SCREW, No. 8-36 x 7/8 in. Flat Hd. S. (Tin Pl.)	
107882	29	LEAD CLAMP	11893-899
	30	MACHINE SCREW, No. 4-48 x 3/16 in. Rd. Hd. Br. (N.P.)	
142777	31	TAG (Orders should specify marking desired)	8988-75
103091	32	TOP PLATE ONLY	C-9453-6
102527	33	CONTACT SPRING SUPPORT	8750-2827
	34	TERMINAL POST with Spring, Reinforcing Spring, Nuts, Washers and Nut Lock (Inc. 1-34a, 2-40, 2-41, 1-42, 1-43, and 1-44)	12451-
102489	34a	TERMINAL SPRING with Spring and Reinforcing Spring (Without Nuts and Washers) for Ref. 34	8094-2367
	35	TERMINAL POST with Nuts and Washers (Inc. 1-35a, 2-40, 2-41, 1-42, 1-43 and 1-44)	12451-
130200	35a	TERMINAL POST ONLY, for Ref. 35	8094-1192
	36	TERMINAL POST with Nuts and Washers (Inc. 1-36a, 2-40, 2-41, 1-42, 1-43 and 1-44)	12451-
102493	36a	TERMINAL POST ONLY, for Ref. 36	8094-2368
	37	TERMINAL POST with Nut Ref. 44	12451-
149216	37a	TERMINAL POST ONLY, for Ref. 37	8094-2202
	38	TERMINAL POST with Nuts and Washers (Inc. 1-38a, 2-40, 3-41, 1-42, 1-43 and 1-44)	12451-
130199	38a	TERMINAL POST ONLY, for Ref. 38	8094-706
	39	TERMINAL POST with Nut Ref. 44	12451-
214907	39a	TERMINAL POST ONLY, for Ref. 39	8094-2207
29101	40	NUT	8109-193
29102	41	WASHER	7828-139
29103	42	NUT	8109-194
69705	43	WASHER	7828-287

UNION SWITCH & SIGNAL CO.

PIECE	REF.	DESCRIPTION	DWG. REF.
72948	44	NUT	8109-383
108378	45	TERMINAL CONNECTOR	8064-878
108377	46	STUD	8095-743
	47	SPRING RETAINER SCREW, Ref. 47a, with Nut Ref. 48 and Nut Lock Ref. 49	12471-
102542	47a	SPRING RETAINER SCREW ONLY	8098-1428
1505	48	NUT	8109-11
164349	49	NUT LOCK	8486-368
102529	50	COIL SPRING	8124-263
108145	51	SHIM	12775-7
107513	52	ARMATURE COMPLETE	8157-460
107512	52a	ARMATURE ONLY	8157-460
107514	52b	ARMATURE SUPPORT	11893-898
54920	52c	RIVET. For attaching Ref. 52a to Ref. 52b	10301-1
102515	53	BACK CONTACT SPRING (.008 in. Thick) with Sil. Plat. Tip	8385-2540
102516	53a	BACK CONTACT SPRING (.008 in. Thick) with Tungsten Tip	8385-2540
107519	54	FRONT CONTACT SPRING (.0179 in. Thick) with Sil. Plat. Tip	8385-2540
107520	54a	FRONT CONTACT SPRING (.0179 in. Thick) with Tungsten Tip	8385-2540
193651	55	SILVER PLAT. CONTACT TIP for Refs. 53 and 54	8341-534
162642	55a	TUNGSTEN CONTACT TIP for Refs. 53a and 54a	8341-317
109103	56	FRONT OR BACK CONTACT POST with Sil. Plat. Tip Complete (Inc. 1-57, 1-58, 1-59, 1-60 and 1-48)	8094-2413
109102	56a	FRONT OR BACK CONTACT POST with Tungsten Tip Complete (Inc. 1-57, 1-58, 1-59, 1-60a and 1-48)	8094-2413
102524	57	CONTACT SUPPORT	C-9453-5
211046	58	SCREW	8098-1437
134516	59	NUT LOCK	8486-368
102511	60	CONTACT POST with Sil. Plat. Tip	8094-2369
102510	60a	CONTACT POST with Tungsten Tip	8094-2369
102492	61	GUIDE PLATE	12538-185
102525	62	CONTACT SPRING STOP	8735-862

UNION SWITCH & SIGNAL CO.

PIECE	REF.	DESCRIPTION	DWG. REF.
209796	63	NUT LOCK	8486-405
215346	64	BRACKET	C-16747-1
108510	65	RATCHET AND CAM COMPLETE	9121-183
	66	TRUNNION Ref. 66a with Nut Ref. 67	8378-233
124887	66a	TRUNNION ONLY	8378-233
29577	67	NUT	8109-205
108581	68	DRIVING MAGNET COMPLETE, 175-Ohms	C-16747-2
	69	MACHINE SCREW, No. 10-30 x 1/2 in. Flat Hd. S. (N.P.)	
108505	70	PAWL COMPLETE	9121-182
131258	71	LOCK WASHER	8486-367
62977	72	SCREW	8098-845
108512	73	CONTACT SPRING with Sil. Plat. Tip	8385-2663
108580	74	CONTACT SPRING with Sil. Plat. Tip	8385-2663
108583	75	SIL. PLAT. CONTACT TIP for Refs. 73 and 74	8341-534
152726	76	STOP SPRING	8385-2166
174235	77	INSULATION	8750-2503
215372	78	WIRE TERMINAL	8244-142
169144	79	INS. BUSHING	B-10266-1
	80	MACHINE SCREW, No. 3-56 x 1-5/16 in. Fil. Hd. S. (N.P.)	
152720	81	WASHER	7828-275
	82	STOP SCREW, Ref. 82a, with Nut Ref. 83	12471-
108584	82a	STOP SCREW ONLY	8098-1134
26942	83	NUT	8109-184
181738	84	LOCK WASHER	8486-399
154860	85	NUT	8109-448
108507	86	COIL COMPLETE, 175-Ohms	8133-535
152757	87	BACK STRAP	8162-226
108508	88	ARMATURE COMPLETE	8157-465
152756	89	ARMATURE STOP	11893-432
	90	MACHINE SCREW, No. 10-30 x 5/8 in. Flat Hd. S. (N.P.)	

UNION SWITCH & SIGNAL CO.

PIECE	REF.	DESCRIPTION	DWG. REF.
	91	MACHINE SCREW, No. 6-40 x 3/16 in. Fil. Hd. S. (N.P.)	
215741	92	SPRING	8124-259
108376	93	BRACKET COMPLETE	11893-911
175360	94	SPRING WASHER	7828-374
	95	1/16 in. x 3/4 in. Stainless S. Cotter	
161589	96	CORE COMPLETE	8101-304
108509	97	SHAFT	12501-148
160738	98	RATCHET	9121-136
108379	99	CAM COMPLETE	12770-20
54928	100	RIVET	10301-21
105713	101	CAP	12770-1
221662	102	WALL MOUNTING BRACKET (Not shown)	12404-42

11-25-46

PLATE W-22

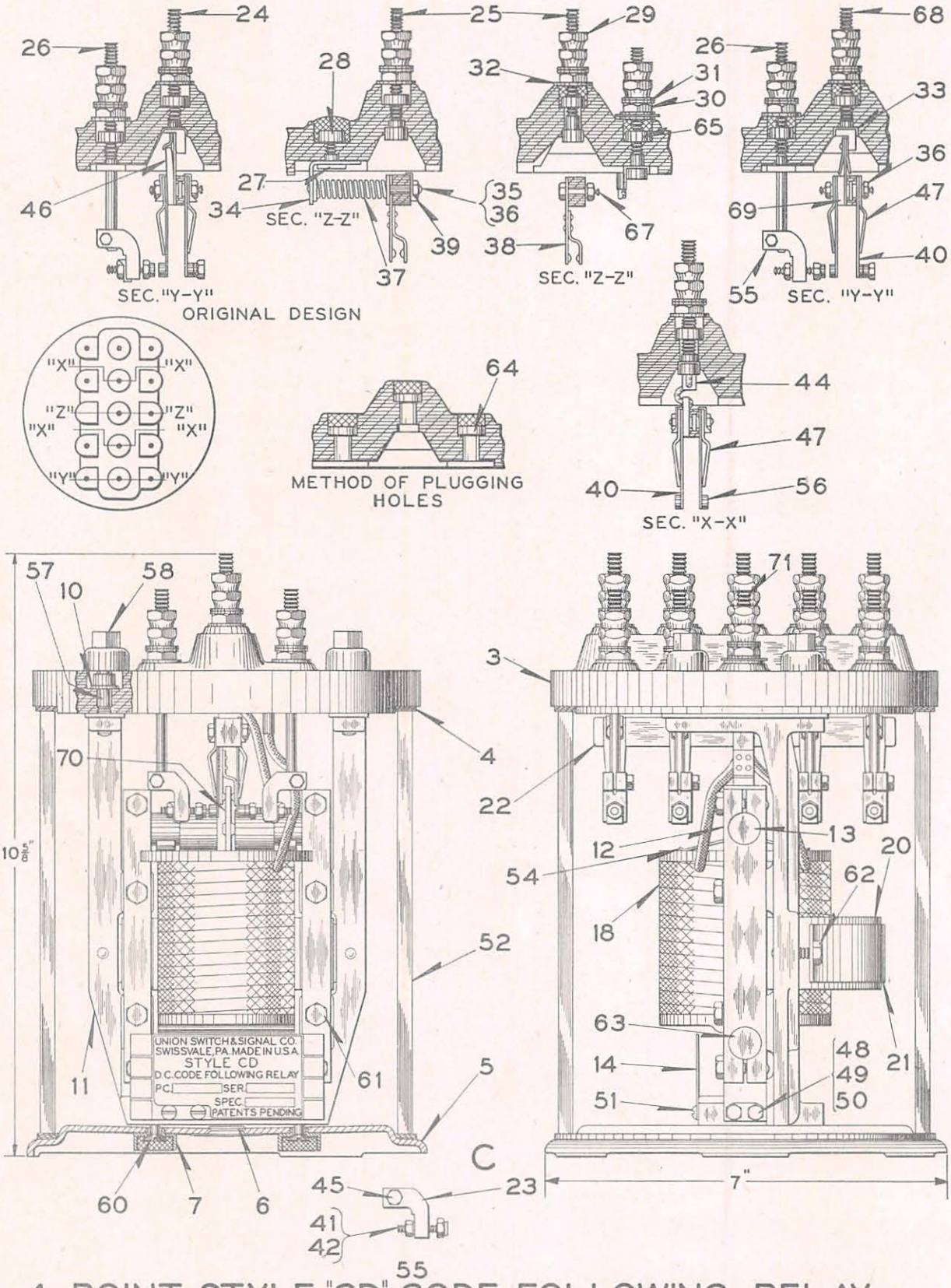

4-POINT STYLE "CD" CODE FOLLOWING RELAY

2-2-42 11-25-46
9-9-40

UNION SWITCH & SIGNAL CO.

CODED TRACK CIRCUIT CONTROL SYSTEM
STYLE "CD" CODE FOLLOWING RELAYS
(WITH SPRING HINGED ARMATURE)

When required orders should specify:-
"Equipped with plug couplers"
"Equipped for use with plug couplers"
Plug couplers are shown on Plate W-75.
If Wall Mounting Bracket Ref.59 is desired orders should so state.
Order by Plate, Piece, Reference and Abbreviated Description

STYLE "CD" 4-POINT CODE FOLLOWING RELAY COMPLETE Dwg. C-9452-7					
PIECE	REF.	KIND OF RELAY	OHMS	CONTACTS	CONTACT TIPS
255625	C	Track	0.15	2F-2B L.V.	Sil. Plat.
255626	Ca	Track	0.15	4F-4B L.V.	Sil. Plat.
232752	Cb	Track	0.30	2F-2B L.V.	Sil. Plat.
232753	Cc	Track	0.30	4F-4B L.V.	Sil. Plat.
223955	Cd	Track	0.60	2F-2B L.V.	Sil. Plat.
223956	Ce	Track	0.60	4F-4B L.V.	Sil. Plat.
214392	Cf	Track	0.60	2F-2B H.V. 2F-2B L.V.	Tungsten Sil. Plat.
212924	Cg	Track	0.95	2F-2B L.V.	Sil. Plat.
210789	Ch	Track	0.95	4F-4B L.V.	Sil. Plat.
213108	Cj	Track	0.95	2F-2B H.V. 2F-2B L.V.	Tungsten Sil. Plat.
215052	Ck	Track	0.95	4F-4B H.V.	Tungsten
216176	Cm	IR	3	2F-2B L.V.	Sil. Plat.
232811	Cn	Line	6	2F-2B L.V.	Sil. Plat.
232812	Co	Line	6	4F-4B L.V.	Sil. Plat.
216210	Cp	TM	15	2F-2B L.V.	Sil. Plat.
215743	Cq	TM	15	4F-4B L.V.	Sil. Plat.
212472	Cr	Track	18.5	2F-2B L.V.	Sil. Plat.
212473	Cs	Track	18.5	1F-1B L.V. 1F-1B H.V.	Sil. Plat. Tungsten
215169	Ct	Track	18.5	2F H.V. 2B L.V.	Tungsten Sil. Plat.
210440	Cu	Track	18.5	4F-4B L.V.	Sil. Plat.
207810	Cv	Track	18.5	1F-1B H.V. 3F-3B L.V.	Tungsten Sil. Plat.
215170	Cw	Track	18.5	2F H.V. 2F-4B L.V.	Tungsten Sil. Plat.

11-25-46

UNION SWITCH & SIGNAL CO.

PIECE	REF.	KIND OF RELAY	OHMS	CONTACTS	CONTACT TIPS
231112	Cx	Track	18.5	2F-2B H.V.	Tungsten
223415	Cy	Line	135	2F-2B L.V.	Sil. Plat.
223957	Cz	Line	135	2F-2B H.V.	Tungsten
223414	Caa	Line	135	4F-4B L.V.	Sil. Plat.
223954	Cbb	Line	135	1F-1B H.V. 3F-2B L.V.	Tungsten Sil. Plat.
216174	Ccc	Line	225	4F-4B L.V.	Sil. Plat.
216175	Cdd	Line	225	2F-2B L.V.	Sil. Plat.
242754	Cee	Line	225	1F-1B H.V. 3F-3B L.V.	Tungsten Sil. Plat.
242755	Cff	Line	225	2F-2B H.V.	Tungsten
242756	Cgg	Line	225	1F-1B L.V. 1F-1B H.V.	Sil. Plat. Tungsten
242757	Chh	Line	225	2F-1B H.V. 1B L.V.	Tungsten Sil. Plat.
249889	Cjj	Line	225	4F-4B H.V.	Tungsten
250403	Ckk	Line	225	2F-2B L.V. 2F-2B H.V.	Sil. Plat. Tungsten
257075	Cmm	Line	225	2F H.V. 2B L.V.	Tungsten Sil. Plat.
261767	Cnn	Line	135	2F-2B H.V. 2F-2B L.V.	Tungsten Sil. Plat.

PIECE	REF.	DESCRIPTION	DWG. REF.
103091	3	TOP PLATE ONLY	C-9453-6
33872	4	GASKET	8078-76
207441	5	BASE COMPLETE with Ventilator Ref. 6, Collars Ref. 7 and Gasket Ref. 4	10937-7
34340	6	VENTILATOR for Ref. 5	C-7459-6
125240	7	COLLAR for Ref. 5	8350-530
	9	MACHINE SCREW, No. 14-24 x 7/8 in. Fil. Hd. S. (Tin Pl.) (Used previous to 10-1-40 for attaching Top Plate to Support Bracket) (Not shown)	
38448	10	WASHER for Refs. 9 and 57	7826-98
197373	11	SUPPORT BRACKET with Dowels	C-9453-3
197181	12	CORE ONLY	8101-386
187875	13	POLE PIECE ONLY	8250-101
102583	14	NAME PLATE for Refs. Ca, Cc, Ce, Ch, Cq, Cu, Caa and Ccc	8225-511
102572	14a	NAME PLATE for Refs. Cv, Cbb and Cee	8225-511

UNION SWITCH & SIGNAL CO.

PIECE	REF.	DESCRIPTION	DWG. REF.
106238	14b	NAME PLATE for Refs. C, Cb, Cd, Cg, Cm, Cn, Cp, Cr, Cy, and Cdd....	8225-511
106239	14c	NAME PLATE for Refs. Cs and Cgg.....	8225-511
108064	14d	NAME PLATE for Refs. Ct and Cmm.....	8225-511
108065	14e	NAME PLATE for Ref. Cw.....	8225-511
108299	14f	NAME PLATE for Refs. Cj, Cf, Ckk and Cnn.....	8225-511
108298	14g	NAME PLATE for Refs. Ck and Cjj.....	8225-511
228739	14h	NAME PLATE for Ref. Chh.....	8225-511
224232	14j	NAME PLATE for Refs. Cx, Cz and Cff.....	8225-511
210790	18	MAGNET COIL COMPLETE, 0.95-Ohm	8133-511
211052	18a	MAGNET COIL COMPLETE, 18.5-Ohms.....	8133-511
215981	18c	MAGNET COIL COMPLETE, 15.0-Ohms.....	8133-511
216236	18d	MAGNET COIL COMPLETE, 225-Ohms	8133-511
216237	18e	MAGNET COIL COMPLETE, 3-Ohms.....	8133-511
224177	18f	MAGNET COIL COMPLETE, 0.60-Ohm.....	8133-511
223413	18g	MAGNET COIL COMPLETE, 135-Ohms.....	8133-511
232751	18h	MAGNET COIL COMPLETE, 0.30-Ohms.....	8133-511
232913	18j	MAGNET COIL COMPLETE, 6-Ohms.....	8133-511
255624	18k	MAGNET COIL COMPLETE, 0.15-Ohm.....	8133-511
197182	20	PERMANENT MAGNET.....	12586-11
197183	21	CLAMP.....	10914-736
102527	22	CONTACT SPRING SUPPORT COMPLETE.....	8750-2827
102524	23	CONTACT SPRING SUPPORT ONLY.....	C-9453-5
	24	TERMINAL POST WITH SPRING, NUTS, WASHERS AND LOCK WASHER (Inc. 1-24a, 1-28, 2-29, 1-30, 2-31, 1-32 and 1-33).....	12451-
102489	24a	TERMINAL POST WITH SPRING AND RIVETS (Without Nuts and Washers)	8094-2367
	25	TERMINAL POST WITH NUTS AND WASHERS (Inc. 1-25a, 1-65, 2-29, 1-30, 2-31, and 1-32).....	12451-
130200	25a	TERMINAL POST ONLY for Refs. 25 and 71.....	8094-1192
	26	TERMINAL POST WITH NUTS AND WASHERS (Inc. 1-26a, 1-65, 2-29, 1-30, 2-31 and 1-32).....	12451-
102493	26a	TERMINAL POST ONLY, for Ref. 26.....	8094-2368
	27	TERMINAL POST WITH NUT (Inc. 1-27a, and 1-28).....	12451-
149216	27a	TERMINAL POST ONLY for Ref. 27.....	8094-2202

UNION SWITCH & SIGNAL CO.

PIECE	REF.	DESCRIPTION	DWG. REF.
72948	28	NUT	8109-383
29101	29	NUT	8109-193
29103	30	NUT	8109-194
29102	31	WASHER	7828-139
69705	32	WASHER	7828-287
209796	33	NUT LOCK	8486-405
102496	34	SPRING RETAINER COMPLETE	10914-873
	35	SPRING RETAINER SCREW with Nut Ref. 36 and Nut Lock Ref. 39	12471-
102542	35a	SCREW ONLY, for Ref. 35	8098-1428
1505	36	NUT ONLY, for Refs. 35, 41 and 42	8109-11
102529	37	COIL SPRING	8124-263
103443	38	OPERATING ARM COMPLETE	12748-5
164349	39	NUT LOCK	8486-368
102515	40	CONTACT SPRING WITH SILVER PLAT. TIP	8385-2540
102516	40a	CONTACT SPRING WITH TUNGSTEN TIP	8385-2540
	41	CONTACT POST WITH SILVER PLAT. TIP, NUT AND LOCK WASHER (Inc. 1-41a, 1-36 and 1-49a)	12451-
102511	41a	CONTACT POST WITH SILVER PLAT. TIP ONLY	8094-2369
	42	CONTACT POST WITH TUNGSTEN TIP, NUT AND LOCK WASHER (Inc. 1-42a, 1-36 and 1-49a)	12451-
102510	42a	CONTACT POST WITH TUNGSTEN TIP ONLY	8094-2369
103075	44	TERMINAL COMPLETE	8244-161
211046	45	SCREW for Ref. 23	8098-1437
102492	46	GUIDE PLATE	12538-185
102525	47	CONTACT SPRING STOP	8735-862
197388	48	PLATE	12538-157
8668	49	SCREW	8098-165
	49a	LOCK WASHER, No. 6 Ph. Bz. (Int. Teeth) (N.P.) for Refs. 41, 42, and 49	
	51	MACHINE SCREW, No. 6-40 x 3/16 in. Rd. Hd. Br. (N.P.)	
125249	52	GLASS COVER	8163-96
106329	54	COIL RETAINER	8735-911

UNION SWITCH & SIGNAL CO.

PIECE	REF.	DESCRIPTION	DWG. REF.
109102	55	FRONT OR BACK CONTACT POST WITH TUNGSTEN TIP	8094-2413
109103	55a	FRONT OR BACK CONTACT POST WITH SIL. PLAT. TIP	8094-2413
193651	56	CONTACT TIP (SIL. PLAT.) for Ref. 40	8341-534
162642	56a	CONTACT TIP (TUNGSTEN) for Ref. 40a	8341-317
219560	57	STUD	8114-972
105713	58	INSULATED NUT	12770-1
221662	59	WALL MOUNTING BRACKET (Not shown)	12404-42
	60	MACHINE SCREW, No. 10-32 x 3/4 in. Flat Hd. S. (Tin Pl.)	
	61	MACHINE SCREW, Ref. 61a with No. 10 Ph. Bz. Lock Washer (Int. Teeth) (N.P.)	
263590	61a	MACHINE SCREW ONLY	8098-1482
263591	62	MACHINE SCREW	8098-1482
246941	63	POLE PIECE	8250-101
239949	64	DUMMY PLUG	8078-732
69706	65	NUT	8109-383
	66	TAG (Orders should specify marking desired) Not shown	8988-75
	67	SCREW Ref.67a with Lock Washer Ref.49a and Nut Ref.36	
221184	67a	SCREW ONLY	8098-1437
	68	TERMINAL POST WITH SPRING NUTS AND WASHERS (Inc.1-68a, 2-29, 1-30, 2-31, 1-32, 1-33 and 1-65)	12451-
107425	68a	TERMINAL POST WITH SPRING AND RIVET (Without Nuts and Washers)	8094-2424
228755	69	GUIDE PLATE	12538-185
263395	70	ARMATURE COMPLETE	8157-442
	71	TERMINAL POST WITH NUTS AND WASHERS (Inc.1-25a, 2-29, 1-30, 3-31, 1-32 and 1-65)	12451-

PLATE W-24

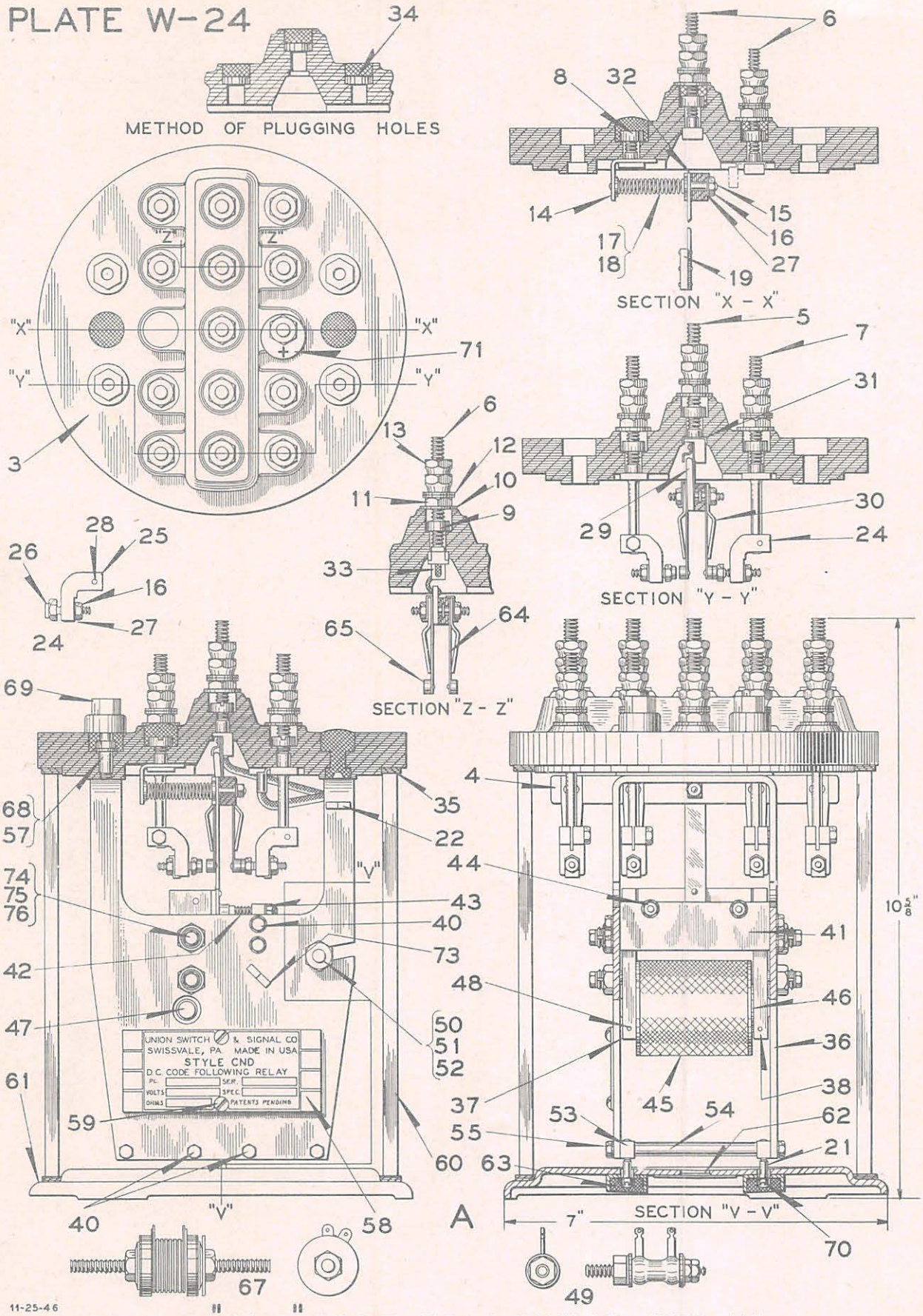

11-25-46
2-2-42
9-9-40

STYLE "CND" CODE FOLLOWING RELAY

UNION SWITCH & SIGNAL CO.

CODED TRACK CIRCUIT CONTROL SYSTEM

STYLE "CND" NEUTRAL CODE FOLLOWING LINE RELAY

Plug Couplers for "CND" Relays will be found on Plate W-75.

If Wall Mounting Bracket Ref. 66 is desired orders should so state.

Order by Plate, Piece, Reference and Abbreviated Description

STYLE "CND" NEUTRAL CODE FOLLOWING LINE RELAY Dwg. C-9452-9				
PIECE	REF.	OHMS	CONTACTS	REMARKS
213471	A	60	2F-2B L.V.	Sil.Plat. to Sil. Plat. Contact Tips
214433	Aa	60	4F-4B L.V.	Sil.Plat. to Sil. Plat. Contact Tips
216285	Ab	2.5	4F-4B L.V.	Sil.Plat. to Sil. Plat. Contact Tips
214432	Ac	60	2F-2B H.V.	Tungsten to Tungsten Contacts
214434	Ad	60	3F-3B L.V. 1F-1B H.V.	Sil.Plat. to Sil. Plat Contacts Tungsten to Tungsten Contacts
225230	Ae	60	2F-2B L.V.	Sil.Plat. to Sil. Plat Contacts Having Rectifier instead of Resistor

PIECE	REF.	DESCRIPTION	DWG. REF.
103091	3	TOP PLATE ONLY	C-9453-6
102527	4	CONTACT SPRING SUPPORT COMPLETE	8750-2827
	5	TERMINAL POST WITH SPRING, REINFORCING SPRING, NUTS, WASHERS AND NUT LOCK (Inc. 1-5a, 1-9, 1-10, 1-11, 2-12, 2-13 and 1-31)	12451-
102489	5a	TERMINAL POST WITH SPRING, REINFORCING SPRING AND RIVETS (Without Nuts and Washers)	8094-2367
	6	TERMINAL POST WITH NUTS AND WASHERS (Inc. 1-6a, 1-9, 1-10, 1-11, 2-12 and 2-13)	12451-
130200	6a	TERMINAL POST ONLY, for Ref. 6	8094-1192
	7	TERMINAL POST WITH NUTS AND WASHERS (Inc. 1-7a, 1-9, 1-10, 1-11, 2-12 and 2-13)	12451-
102493	7a	TERMINAL POST ONLY for Ref. 7	8094-2368
	8	TERMINAL POST WITH NUT (Inc. 1-8a and 1-9)	12451-
149216	8a	TERMINAL POST ONLY for Ref. 8	8094-2202
69706	9	NUT	8109-383

UNION SWITCH & SIGNAL CO.

PIECE	REF.	DESCRIPTION	DWG. REF.
69705	10	WASHER	7828-287
29103	11	NUT	8109-194
29102	12	WASHER	7828-139
29101	13	NUT	8109-193
102496	14	SPRING RETAINER	10914-873
	15	SPRING RETAINING SCREW with Nut Ref. 16 and Washer Ref. 27	12451-
102542	15a	SPRING RETAINING SCREW ONLY, for Ref. 15	8098-1428
1505	16	NUT ONLY for Refs. 15, 24 and 24a	8109-11
108135	17	COIL SPRING for Refs. A and Ac	8124-263
107850	18	COIL SPRING for Refs. Aa, Ab and Ad	8124-263
102529	18a	COIL SPRING for Ref. Ae	8124-263
107513	19	ARMATURE COMPLETE	8157-460
	21	MACHINE SCREW, No. 8-36 x 7/8 in. Fil. Hd. S. (Tin Pl.)	
107882	22	LEAD CLAMP	11893-899
	23	MACHINE SCREW, No. 4-48 x 3/16 in. Rd. Hd. Br. (N.P.) for plugging holes in Base Plate (Not shown)	
109103	24	CONTACT POST COMPLETE (Inc. 1-25, 1-26, 1-27, 1-16 and 1-28)	8094-2413
109102	24a	CONTACT POST COMPLETE (Inc. 1-25, 1-26a, 1-27, 1-16 and 1-28)	8094-2413
102524	25	CONTACT SUPPORT for Refs. 24 and 24a	C-9453-5
102511	26	CONTACT POST WITH SIL. PLAT. TIP for Ref. 24	8094-2369
102510	26a	CONTACT POST WITH TUNGSTEN TIP for Ref. 24a	8094-2369
	27	LOCK WASHER, No. 6 Ph. Bz. (N.P.)	8094-2413
211046	28	SCREW for Refs. 24 and 24a	8098-1437
102492	29	GUIDE PLATE	12538-185
102525	30	CONTACT SPRING STOP	8735-862
209796	31	NUT LOCK	8486-405
108145	32	SHIM	12775-7
103075	33	TERMINAL COMPLETE	8244-161
239949	34	DUMMY PLUG	8078-732
214907	34a	TERMINAL POST ONLY for Ref. 34	8094-2207
33872	35	GASKET	8078-76

UNION SWITCH & SIGNAL CO.

PIECE	REF.	DESCRIPTION	DWG. REF.
107516	36	BRACKET	C-9377-14
107505	37	POLE PIECE COMPLETE (L.H.)	8250-118
107507	38	POLE PIECE COMPLETE (R.H.)	8250-118
223412	39	WASHER	7828-35
	40	SCREW Ref.40a with #8 Ph.Bz.Lock Washer (N.P.)	12451-
107552	40a	SCREW ONLY	8098-305
107510	41	PLATE	12538-219
107511	42	BACK STOP SCREW	8098-1131
	43	LOCK WASHER, No. 8 Ph. Bz. (N.P.)	
32498	44	NUT	8109-223
107664	45	MAGNET COIL COMPLETE, 60-Ohms	8133-531
109883	45a	MAGNET COIL COMPLETE, 2.5-Ohms	8133-531
210515	46	WASHER	8078-1503
107509	47	CORE	8101-401
	48	MACHINE SCREW, No. 8-36 x 3/4 in. Fil. Hd. S. (Tin Pl.)	
108154	49	RESISTOR COMPLETE, 600-Ohms	9065-287
218404	49a	RESISTOR COMPLETE, 200-Ohms	9065-287
109894	49b	RESISTOR COMPLETE, 4.0-Ohms	9065-287
	50	JAM NUT, 1/4 in. Hex. S. (Tin Pl.)	
	51	LOCK WASHER, 1/4 in. Ph. Bz. (N.P.)	
73099	52	WASHER	7826-66
107426	53	PLATE	12538-221
214406	54	SPACER	8350-940
107553	55	SCREW with No. 8 Ph. Bz. Lock Washer (N.P.)	8098-305
	56	MACHINE SCREW, No. 14-24 x 3/4 in. Fil. Hd. S. (Tin Pl.) Used previous to 9-23-40 for attaching Top Plate to Bracket (Not shown)	
38448	57	WASHER	7826-98
107569	58	NAME PLATE for Ref. A	8225-540
107571	58a	NAME PLATE for Refs. Aa and Ab	8225-540
107570	58b	NAME PLATE for Ref. Ac	8225-540
107572	58c	NAME PLATE for Ref. Ad	8225-540

UNION SWITCH & SIGNAL CO.

PIECE	REF.	DESCRIPTION	DWG. REF.
228601	58d	NAME PLATE for Ref. Ae.	8225-540
	59	MACHINE SCREW, No. 6-40 x 3/16 in. Rd. Hd. Br. (N.P.)	
125249	60	GLASS COVER.	8163-96
107565	61	BASE COMPLETE WITH VENTILATOR, COLLARS AND GASKET Ref. 35	10937-3
34340	62	VENTILATOR for Ref. 61.	C-7459-6
125340	63	COLLAR for Ref. 61.	8350-530
102515	64	BACK CONTACT SPRING (.008 in. thick) with Sil. Plat. Tip.	8385-2540
107519	64a	FRONT CONTACT SPRING (.0179 in. thick) with Sil. Plat. Tip.	8385-2540
107521	64b	FRONT CONTACT SPRING (.0142 in. thick) with Sil. Plat. Tip.	8385-2540
107520	64c	FRONT CONTACT SPRING (.0179 in. thick) with Tungsten Tip.	8385-2540
102516	64d	BACK CONTACT SPRING (.088 in. thick) with Tungsten Tip.	8385-2540
107522	64e	FRONT CONTACT SPRING (.0142 in. thick) with Tungsten Tip.	8385-2540
193651	65	CONTACT TIP (Sil. Plat.) for Refs.64, 64a and 64b	8341-534
162642	65a	CONTACT TIP (Tungsten) for Refs. 64c, 64d, and 64e.	8341-317
221662	66	WALL MOUNTING BRACKET (Not shown).	12404-42
107610	67	STYLE "RCS-2" RECTIFIER for Ref. Ae.	12746-6
219560	68	STUD.	8114-972
105713	69	INSULATED NUT.	12770-1
73493	70	WASHER.	7826-78
142777	71	TAG (marked +).	8988-75
184902	72	WASHER (Not shown) used where contact spring is not required.	7828-379
107882	73	LEAD CLAMP.	11893-899
236814	74	BUSHING.	8350-989
234456	75	SCREW.	8098-305
146964	76	NUT.	8109-442

PLATE W-24 B

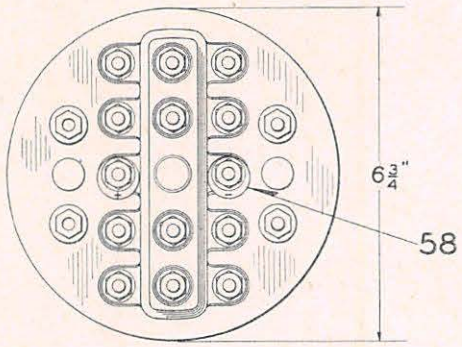

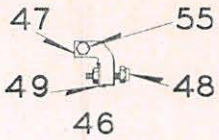

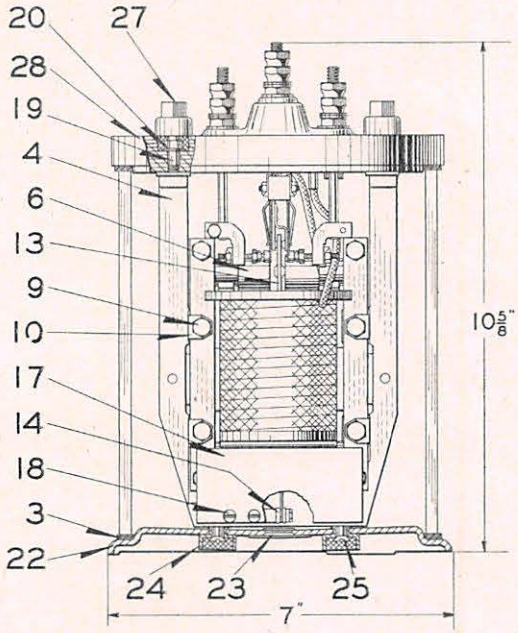

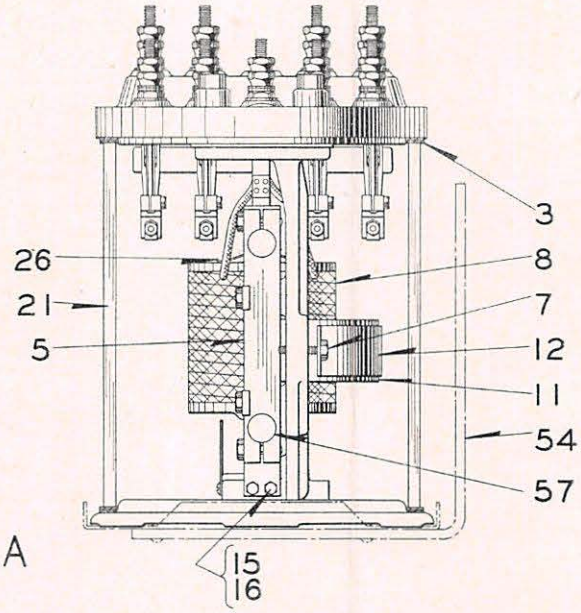

A

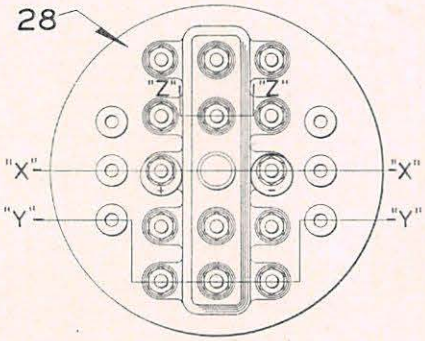

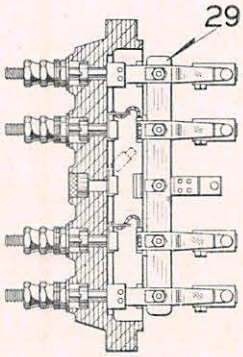

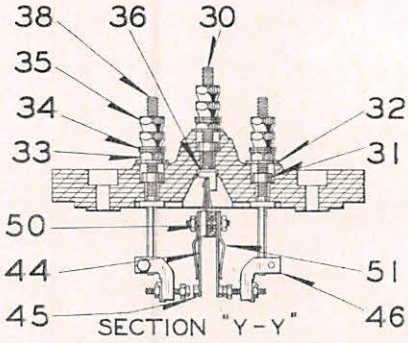

SECTION "Y-Y"

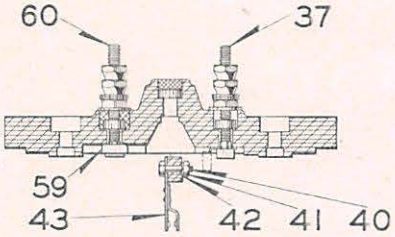

SECTION "X-X"

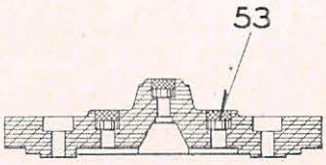

METHOD OF PLUGGING HOLES

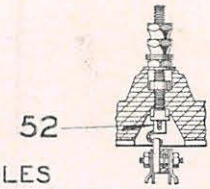

SECTION "Z-Z"

STYLE "CDP" CODE FOLLOWING SERIES LINE RELAY

2 2-42 11-25-46

UNION SWITCH & SIGNAL CO.

CODED TRACK CIRCUIT CONTROL SYSTEM
STYLE "CDP" CODE FOLLOWING RELAYS

When required order should specify:-
"Equipped with Plug Coupler"
"Equipped for use with Plug Coupler"
Plug Couplers are shown on Plate W-75.

If Wall Mounting Bracket Ref.54 is desired orders should so state.

Order by Plate, Piece, Reference and Abbreviated Description

STYLE "CDP" CODE FOLLOWING RELAY....Dwg.C-9452-11				
PIECE	REF.	TYPE	OHMS	CONTACT DESCRIPTION
233017	A	Series Line	17	4N-4R L.V. Sil. Plat. to Sil. Plat.
233018	Aa	Series Line	17	2N-2R L.V. Sil. Plat. to Sil. Plat.
228898	Ab	Line	225	4N-4R L.V. Sil. Plat. to Sil. Plat.
228899	Ac	Line	225	2N-2R L.V. Sil. Plat. to Sil. Plat.
265760	Ad	Line	135	4N-4R L.V. Sil. Plat. to Sil. Plat.
265761	Ae	Line	135	2N-2R L.V. Sil. Plat. to Sil. Plat.

PIECE	REF.	DESCRIPTION	DWG.REF.
33872	3	GASKET	8078-76
197373	4	SUPPORT BRACKET WITH DOWELS	C-9453-3
197181	5	CORE	8101-386
187875	6	POLE PIECE	8250-101
42227	7	SCREW, NO.10-30 thread (Used previous to 6-18-46)	8098-710
263591	7a	SCREW, NO.10-32 thread (Used since 6-18-46)	8098-1482
258688	8	COIL, 17-Ohms	8133-511
216236	8a	COIL, 225-Ohms	8133-511
223413	8b	COIL, 135-Ohms	8133-511
166138	9	SCREW, NO.10-30 thread (Used previous to 6-18-46)	8098-476
263590	9a	SCREW, NO.10-32 thread (Used since 6-18-46)	8098-1482
	10	LOCK WASHER, NO.10 Ph.Bz. (N.P.)	
197182	11	PERMANENT MAGNET	12586-11
197183	12	CLAMP	10914-736
263396	13	ARMATURE COMPLETE	8157-442
197388	14	PLATE	12538-157

UNION SWITCH & SIGNAL CO.

PIECE	REF.	DESCRIPTION	DWG. REF.
8668	15	SCREW	8098-165
	16	LOCK WASHER, NO.6 Ph.Bz. (N.P.) for Ref.15	
223476	17	NAME PLATE for Refs.A, Ab and Ad.	8225-581
223477	17a	NAME PLATE for Refs.Aa, Ac and Ae.	8225-581
	18	MACHINE SCREW, NO.6-40 x 3/16" Rd.Hd.Br. (N.P.)	
219560	19	STUD	8114-972
38448	20	WASHER for Ref.19	7826-98
125249	21	GLASS COVER	8163-96
207441	22	BASE WITH VENTILATOR, COLLARS AND GASKET Ref.3	10937-7
34340	23	VENTILATOR for Ref.22	C-7459-6
125240	24	COLLAR for Ref.22	8385-530
	25	MACHINE SCREW, NO.10-30 x 3/4" Flat Hd.S. (Tin Pl.) (Used previous to 6-18-46)	
	25a	MACHINE SCREW, NO.10-32 x 3/4" Flat Hd.S. (Tin.Pl.) (Used since 6-18-46)	
106329	26	COIL RETAINER	8735-911
105713	27	NUT COMPLETE	12770-1
103091	28	TOP PLATE ONLY	C-9453-6
102527	29	CONTACT SPRING SUPPORT COMPLETE	8750-2827
	30	TERMINAL POST WITH CONTACT SUPPORT, SPRING STOPS, NUTS, WASHERS, AND NUT LOCK (Inc.1-30a, 1-31, 1-32, 1-33, 2-34, 2-35 and 1-36)	12451-
107425	30a	TERMINAL POST WITH CONTACT SUPPORT AND SPRING STOPS (Without Nuts and Washers)	8094-2424
69706	31	NUT	8109-383
69705	32	WASHER	7828-287
29103	33	NUT	8109-194
29102	34	WASHER	7828-139
29101	35	NUT	8109-193
209796	36	NUT LOCK	8486-405
	37	TERMINAL POST WITH NUTS AND WASHERS (Inc.1-37a, 1-32, 1-33, 3-34 and 2-35)	12451-
130200	37a	TERMINAL POST ONLY for Ref.37	8094-1192
	38	TERMINAL POST WITH NUTS AND WASHERS (Inc.1-38a, 1-31, 1-32, 1-33, 2-34 and 2-35)	12451-

UNION SWITCH & SIGNAL CO.

PIECE	REF.	DESCRIPTION	DWG. REF.
102493	38a	TERMINAL POST ONLY for Ref.38	8094-2368
	40	BOLT WITH NUT AND LOCK WASHER (Inc.1-40a, 1-41 and 1-42)	12471-
221184	40a	BOLT ONLY for Ref.40	8098-1437
1505	41	NUT	8109-11
	42	LOCK WASHER, NO.6 Ph.Bz.	
103443	43	OPERATING ARM COMPLETE	12748-5
224184	44	CONTACT SPRING with Sil.Plat.Tip	8385-2540
193651	45	CONTACT TIP (Sil.Plat.) for Ref.44	8341-534
109103	46	TERMINAL POST COMPLETE (Inc.1-47, 1-48, 1-49, 1-41 and 1-55)	8094-2413
102524	47	CONTACT SUPPORT for Ref.46	C-9453-5
102511	48	CONTACT POST with Sil.Plat.Tip	8094-2369
	49	LOCK WASHER, NO.6 Ph.Bz. (N.P.)	
228755	50	GUIDE PLATE	12538-185
102525	51	CONTACT SPRING STOP	8735-862
103075	52	TERMINAL COMPLETE	8244-161
239949	53	DUMMY PLUG	8078-732
221662	54	MOUNTING BRACKET	12404-42
211046	55	SCREW for Ref.46	8098-1437
246941	57	POLE PIECE	8250-101
142777	58	TAG (Orders should specify marking desired)	8988-75
188259	59	NUT LOCK	8486-310
	60	TERMINAL POST WITH NUTS, WASHERS AND NUT LOCK (Inc.1-37a, 1-32, 1-33, 3-34, 2-35 and 1-59)	12451-

PLATE W-25A

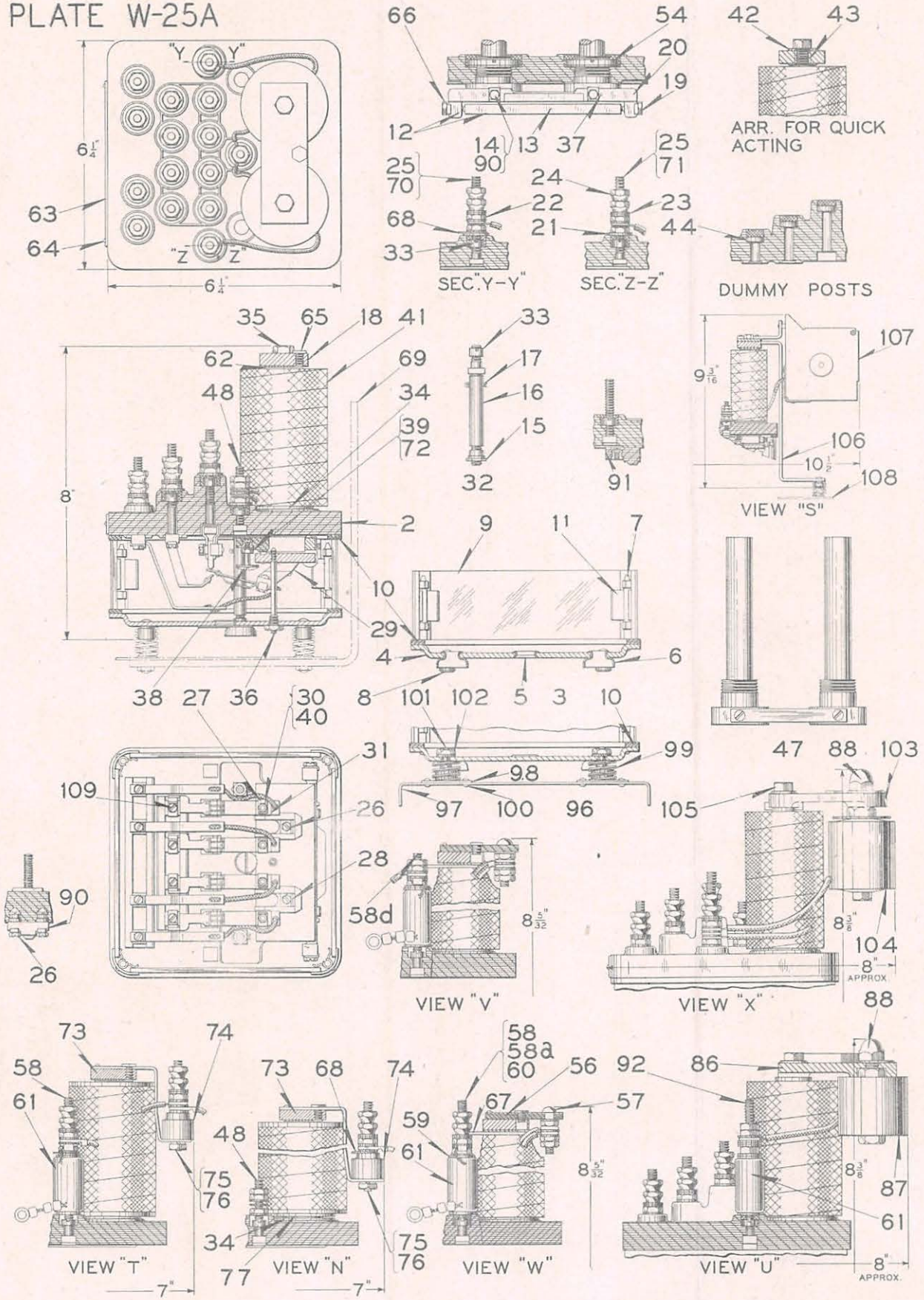

11-25-46
2-2-42

STYLES DN-11, DN-11C, DN-11L 4 POINT RELAYS

UNION SWITCH & SIGNAL CO.

CODED TRACK CIRCUIT CONTROL SYSTEM

STYLE "DN-11", "DN-11C" AND "DN-11L" D.C. NEUTRAL RELAYS (FOUR POINT)

Note: Unless otherwise specified "low voltage" means Silver Spring to Silver Imp. Carbon Front and Silver Spring to Silver Back.

For Contact Springs and Terminal Posts refer to Plate W-35. Plug Couplers for 4-Point Relays will be found on Plate E-5035.

Order by Plate, Piece, Reference and Abbreviated Description

DN-11 D.C. NEUTRAL RELAYS					
PIECE	REF	CONTACT DESCRIPTION	COILS OHMS PER PAIR	REMARKS	DWG. REF.
164255	H	4F-4B L.V.	1	Quick Acting. Coils connected in multiple	C-9077-56
212441	Ha	4F-4B L.V.	1	Coils connected in multiple	C-9077-103
152232	Hb	4F-4B L.V.	2		C-9077-24
160980	Hc	4F-4B L.V.	2	Quick Acting	C-9077-24
171080	Hd	4F-4B L.V.	2QA	Special Coils connected in multiple	C-9077-56
150956	He	4F-4B L.V.	4		C-9077-24
154807	Hf	4F-4B L.V.	4	Quick Acting	C-9077-24
166909	Hg	4F-4B L.V.	9		C-9077-56
188688	Hh	4F-4B L.V. (Sil.Imp.Carbon front and back posts)	55	"J" Relay	C-9077-24
213536	Hj	4F-4B L.V.	55	"J" Relay	C-9077-103
221808	Hk	4F-4B L.V. (Sil.Imp.Carbon front and back posts)	55	With 250-Ohm Resistance Unit per View V	C-9077-103
221809	Hl	4F-4B L.V.	55	With 250-Ohm Resistance Unit per View V	C-9077-103
157289	Hm	4F-4B L.V.	100	Slow Release	C-9077-24
257116	Hn	4F-4B L.V.	110	"SA" Relay. Special Coils	C-9077-103A
257117	Ho	4F-4B L.V.	175	"SA" Relay. Special Coils	C-9077-103A
261632	Hp	4F-4B L.V. (Sil.Imp.Carbon front and back posts)	175	"SA" Relay. Special Coils	C-9077-103A

UNION SWITCH & SIGNAL CO.

DN-11 D.C.NEUTRAL RELAYS (cont'd.)					
PIECE	REF.	CONTACT DESCRIPTION	COILS OHMS PER PAIR	REMARKS	DWG. REF
159996	Hq	4F-4B L.V.	250		C-9077-24
166979	Hr	4F-4B L.V.	250	Slow Release	C-9077-56
211300	Hs	4F-4B L.V. (Sil.Imp.Carbon front and back posts)	250		C-9077-103
225371	Ht	4F-4B L.V. (Sil.Imp.Carbon front and back posts)	250	Slow Release	C-9077-103
255942	Hu	4F-4B L.V.	250	"SA" Relay. Special Coils	C-9077-103A
199523	Hv	4F-4B L.V. (Sil.Imp.Carbon front and back posts)	400	Slow Release	C-9077-24
245821	Hw	4F-4B L.V.	400	Slow Release	C-9077-24
157188	Hx	4F-4B L.V.	500	Slow Release	C-9077-24
157285	Hy	4F-4B L.V.	500		C-9077-24
163751	Hz	4F-4B L.V.(Sil.Imp. Carbon front and back posts)	500		C-9077-56
239079	Haa	4F-4B L.V. (Sil.Imp.Carbon front and back posts)	500	Slow Release	C-9077-103A
157282	Hbb	4F-4B L.V.	670		C-9077-24
157187	Hcc	4F-4B L.V.	1000		C-9077-24
190542	Hdd	4F-4B L.V. (Sil.Imp.Carbon front and back posts)	1000		C-9077-24
191964	Hee	2F-4B L.V. (Two of back contacts are silver to silver heavy duty contacts)	1000		C-9077-24
226417	Hff	4F-4B (3F-3B L.V.; 1F-1B H.V.)	1000		C-9077-103
243947	Hgg	4F-4B L.V. (2F & 2B Sil. to Sil. Imp. Carbon; 2F Sil. to S.I.C. & 2B Heavy Duty)	1000		C-9077-103A
255896	Hhh	4F-4B L.V. (Two contacts heavy duty)	1000		C-9077-24
DN-11C D.C. NEUTRAL RELAY					
213913	J	4F-4B L.V.	1	"VM" Relay. With 1-ohm Resis. Unit per view "W" except with back-strap Ref.18 instead of Ref.56 Coils connected in multiple.	C-9077-112
215068	Ja	4F-4B L.V.(Sil.Imp.Carbon front and back posts)	1	"VM" Relay. With 1-ohm Resis.Unit per view "W" except with back-strap Ref.18 instead of Ref.56 Coils connected in multiple.	C-9077-112

UNION SWITCH & SIGNAL CO.

DN-11C D.C. NEUTRAL RELAY (cont'd.)

PIECE	REF.	CONTACT DESCRIPTION	COILS OHMS PER PAIR	REMARKS	DWG. REF.
215053	Jb	4F-4B L.V.	4	"VMA" Relay. With 6 ohm Resis.Unit per view W	C-9077-112
210581	Jc	4F-4B L.V. (Sil.Imp.Carbon front and back posts.	26	"H" Relay. With 120-Ohm Resis.Unit per View W	C-9077-112
185270	Jd	4F-4B L.V.	30	Slow Release Decoding Relay. With Base Ref. 96	C-9077-112
187766	Je	4F-4B L.V.	30	Slow Release Decoding Relay.	C-9077-112
245845	Jf	4F-4B L.V. (3F-3B Special 1F-1B Heavy Duty posts)	55	"HR" Relay	C-9077-112
212531	Jg	4F-4B L.V. (Sil.Imp. Carbon front and back posts.	55-55	"TM" Relay. With 120 ohm Resis.Unit per View T	C-9077-112
232599	Jh	4F-4B L.V.	70	10 Volt "SA" Relay. Slow Release with 750 ohm Resis.Unit per view "V"	C-9077-112
191649	Jj	4F-4B L.V. (Sil.Imp.Carbon front and back posts)	100	"SA" Relay. With 30-ohm Resis.Unit per view W and one washer Ref. 67 on top of each coil, under coil lock.	C-9077-112
188687	Jk	4F-4B L.V.	100	"H" Relay. With 50-ohm Resis.Unit per view W	C-9077-112
188774	Jl	4F-4B L.V.(Sil.Imp. Carbon front and back posts)	100	"SA" Relay. With 120-Resistance Unit per view W and one washer Ref. 67 on top of each coil, under coil lock.	C-9077-112
226362	Jm	4F-4B L.V.	100	"SA" Relay. With 120-ohm Resis.Unit per view W and one washer Ref. 67 on top of each coil, under coil lock.	C-9077-112
225476	Jn	4F-4B L.V.(2F-2B Sil.Imp.Carbon Front and Back Posts 2F L.V. and 2 back Heavy Duty Posts)	100	"SA" Relay. With 120-ohm Resis.Unit per view W and one washer Ref. 67 on top of each coil, under coil lock.	C-9077-112
191883	Jo	4F-4B L.V. (Sil.Imp.Carbon front and back posts)	100	"SA" Relay. With 135-ohm Resis.Unit per view W and one washer Ref. 67 on top of each coil, under coil lock.	C-9077-112
206944	Jp	4F-4B L.V.(Sil.Imp.Carbon front and back posts)	100	"SA" Relay. With 200-ohm Resis.Unit per view W and one washer Ref.67 on top of each coil, under coil lock.	C-9077-112

UNION SWITCH & SIGNAL CO.

DN-11C D.C.NEUTRAL RELAY (cont'd.)					
PIECE	REF.	CONTACT DESCRIPTION	COILS OHMS PER PAIR	REMARKS	DWG. REF.
217234	Jq	4F-4B L.V.	100	"VM" Relay. With 750 ohm Resis.Unit per view "V". Slow Rel.	C-9077-112
245301	Jr	4F-4B L.V. (Sil. to Silver Imp. Carbon front and back posts)	100	"VM" Relay. With 750 ohm Resis.Unit per view "V"	C-9077-112
191650	Js	4F-4B L.V.(Sil. Imp. Carbon front and back posts)	100	"SA" Relay. With 900 ohm Resis.Unit per view "W" and One Washer Ref. 67 on top of each coil, under coil lock	C-9077-112
243744	Jt	4F-4B L.V. (2F-2B Sil. to Sil. Imp. Carbon front and back posts.) 2F Heavy Duty posts)	110	12 volt "SA" Relay. One washer Ref.67 on top of each coil under coil lock.	C-9077-112
253935	Ju	4F-4B L.V. (1F-1B Sil. to Sil. Imp. Carbon front and back posts 2F-2B Heavy Duty posts 1F Std. and 1B Heavy Duty)	110	12 volt "SA" Relay. One washer Ref. 67 on top of each coil under coil lock.	C-9077-112A
206907	Jv	4F-4B L.V. (Sil. Imp. Carbon front and back posts)	125	"H" Relay. Slow Rel. coils connected in multiple.	C-9077-112
264864	Jw	4F-4B L.V. (3F-3B Special 1F-1B Heavy Duty posts)	175	10 volt "SA" Relay.	C-9077-112A
263745	Jx	4F-4B L.V. (3F-3B Special 1F-1B Heavy Duty posts)	250	"SA" Relay	C-9077-112A
206906	Jy	4F-4B L.V. (Sil. Imp. Carbon front and back posts)	250-250	"LOR" Relay. Arranged per view "N"	C-9077-112
207812	Jz	4F-4B L.V. (Sil. Imp. Carbon front and back posts)	1700	"TM" Relay. With 120 ohm Resis. Unit and Rectifier per View "U"	C-9077-112
DN-11L D.C.NEUTRAL RELAYS					
104944	K	4F-4B L.V.	0.08	Per View "X"	C-9077-104
176524	Ka	4F-4B L.V.	0.10	Per View "S" For use with 25W or 45W Single Filament Lamps	C-9077-86
229401	Kb	4F-4B L.V.	0.32	Per View "X"	C-9077-104

PIECE	REF.	DESCRIPTION	DWG. REF.
156889	2	TOP PLATE, without Cores	C-9078-13
149060	3	BASE, WITH GLASS SHIELDS AND GASKET (Inc. 1-3a, 4-9, 1-10, and 4-11)	C-9078-14
149013	3a	BASE, WITH VENTILATOR, CORNER AND SUPPORTING STUDS (Inc. 1-4, 1-5, 2-6, 4-7 and 4-8)	10937-6

UNION SWITCH & SIGNAL CO.

PIECE	REF.	DESCRIPTION	DWG. REF.
149012	4	BASE ONLY	10937-6
34340	5	VENTILATOR	C-7459-6
108066	6	COLLAR	8350-941
131216	7	CORNER STUD	8114-632
131215	8	SUPPORTING STUD	8114-631
142646	9	GLASS SHIELD (Side and End)	8163-294
149034	10	GASKET	8078-1451
142653	11	SHIELD SUPPORT	10932-29
149211	12	ARMATURE COMPLETE WITH BRACKET, PIVOT SCREWS AND LOCK WASHERS (Inc. 1-13, 2-19, 1-20 and 2-66)	C-9078-7
149210	13	ARMATURE ONLY for Ref. 12	8157-347
195913	14	MACHINE SCREW	8098-1300
138218	15	NUT for Ref. 32	8265-252
142632	16	BUSHING for Ref. 32	8095-631
	17	COTTER PIN, 1/16 in. x 3/8 in. (Tin Pl.) for Ref. 32	
142640	18	BACK STRAP	8162-221
159814	19	PIVOT SCREW for Ref. 12	8378-197
195816	20	BRACKET for Ref. 12	8303-100
69705	21	WASHER	7828-287
29103	22	NUT	8109-194
29102	23	WASHER	7828-139
29101	24	NUT	8109-193
113978	25	TERMINAL POST ONLY, for Refs. 70 and 71	8094-1192
142673	26	SCREW ONLY for attaching Ref. 29 to Armature and Ref. 91 to Top Plate	8098-1300
134516	27	LOCK WASHER for Ref. 30	8486-368
149339	28	LOCK WASHER	8486-368
150113	29	CONTACT SPRING SUPPORT	9968-849
	30	SCREW WITH NUT AND LOCK WASHER (Inc. 1-30a, 1-27, 1-31, and 1-40)	12471-
150166	30a	SCREW ONLY for Ref. 30	8098-550
150140	31	LOCK WASHER for Contact Spring	8486-367

UNION SWITCH & SIGNAL CO.

PIECE	REF.	DESCRIPTION	DWG. REF.
	32	CENTER SCREW COMPLETE WITH BUSHING, COTTER PIN AND NUTS (Inc. 1-32a, 1-33, 1-16, 1-17 and 1-15)	12471-
161180	32a	CENTER SCREW WITH BUSHING AND COTTER PIN, for Ref. 32	8098-1299
72948	33	NUT	8109-383
168826	34	WASHER (1/16 in. thick) (Used under Coil as required)	8078-1499
168824	34a	WASHER (1/8 in. thick) (Used under Coil as required)	8078-1499
	35	CAP SCREW 5/16 in. -18 x 3/4 in. Hex. Hd. (Cad.Pl.) for attaching Back Strap to Magnet Cores.	
142642	36	SCREW WITH NUT Ref. 36a (Used for shipping)	8098-1298
537	36a	NUT, used with Ref. 36	8109-1
57497	37	DOWEL for Armature Bracket	8097-872
	38	BACK STOP SCREW WITH NUT AND LOCK WASHER (Inc. 1-38a, 1-72 and 1-39)	12471-
149076	38a	BACK STOP SCREW ONLY for Ref. 38	8098-549
1506	39	NUT, for Ref. 38	8109-12
151836	40	NUT, for Ref. 30	8109-445
189122	41	MAGNET COIL COMPLETE (27.5-Ohms) for Refs. Hh, Hj, Hk, Hl, Jf	8133-452
153693	41a	MAGNET COIL COMPLETE (50-Ohms) for Refs. Jj, Jk, Jl, Jm, Jn, Jo, Jp, Js	8133-452
144439	41b	MAGNET COIL COMPLETE (2-Ohms) for Refs. H, Ha, He, Hf, J, Ja, Jb	8133-365
143067	41c	MAGNET COIL COMPLETE (500-Ohms) for Refs. Hcc, Hdd, Hee, Hff, Hgg and Hhh	8133-339
157896	41d	MAGNET COIL COMPLETE (250-Ohms) for Refs. Hx, Haa	8133-388
157893	41e	MAGNET COIL COMPLETE (50-Ohms) for Ref. Hm	8133-388
157895	41f	MAGNET COIL COMPLETE (200-Ohms) for Ref. Hv, Hw	8133-388
206908	41g	MAGNET COIL COMPLETE (250-Ohms) for Refs. Jv, Jy	8133-432
153698	41h	MAGNET COIL COMPLETE (250-Ohms) for Ref. Hy and Hz	8133-452
156500	41j	MAGNET COIL COMPLETE (4.5-Ohms) for Ref. Hg	8133-365
212577	41k	MAGNET COIL COMPLETE (55-Ohms) for Ref. Hn, Jg, Jt, Ju	8133-365
106394	41m	MAGNET COIL COMPLETE (850-Ohms) for Ref. Jz	8133-524
156669	41n	MAGNET COIL COMPLETE (50-Ohms) for Ref. Jq, Jr	8133-352
185116	41p	MAGNET COIL COMPLETE (15-Ohms) for Refs. Jd, Je	8133-432
206446	41q	MAGNET COIL COMPLETE (0.16-Ohms) for Refs. K and Kb	8133-452

UNION SWITCH & SIGNAL CO.

PIECE	REF.	DESCRIPTION	DWG. REF.
210580	41r	MAGNET COIL COMPLETE (13-Ohms) for Ref. Jc	8133-365
138111	41s	MAGNET COIL COMPLETE (125-Ohms) for Ref. Hq and Hs	8133-339
169458	41t	MAGNET COIL COMPLETE (4QA-Ohms) for Ref. Hd	8133-339
177534	41u	MAGNET COIL COMPLETE (.05-Ohm) for Ref. Ka	8133-415
184912	41v	MAGNET COIL COMPLETE (1-Ohm) for Ref. Hb and Hc	8133-452
188858	41w	MAGNET COIL COMPLETE (87.5-Ohms) for Ref. Ho, Hp, and Jw	8133-365
191121	41x	MAGNET COIL COMPLETE (125-Ohms) for Ref. Hu and Jx	8133-365
157894	41y	MAGNET COIL COMPLETE (125-Ohms) for Ref. Hr, Ht	8133-388
144561	41z	MAGNET COIL COMPLETE (335-Ohms) for Ref. Hbb	8133-452
177100	41aa	MAGNET COIL COMPLETE (35-Ohms) for Ref. Jh	8133-388
145747	42	WASHER (Used for quick acting relay)	7828-218
25107	43	BUSHING (Used for quick acting relay)	C-7459-2
239949	44	DUMMY PLUG	8078-732
156897	47	MAGNET CORES for DN-11 Relays	C-9078-6
	48	TERMINAL POST WITH NUTS AND WASHERS (For Relays without Resistor) (Inc. 1-48a, 1-21, 3-22, 2-23 and 1-33) for Magnet Lead	12451-
122782	48a	TERMINAL POST ONLY, for Ref. 48	8094-1192
	49	SCREW, WITH NUT (Inc. 1-49a and 1-50) For attaching Ref. 53 to Top Plate (Used previous to 1-26-40; not shown)	12471-
149114	49a	SCREW ONLY, for Ref. 49 (Used previous to 1-26-40)	8098-1300
28166	50	NUT for Ref. 49 (Not shown)	8109-192
150458	51	LOCK WASHER for Refs. 49 and 52a (Used previous to 10-20-39) (Not shown)	8486-382
149075	52a	STUD ONLY (Core pin; used previous to 10-20-39) (Not shown)	8114-677
149254	53	BACK STOP AND CORE PIN BRACKET (Used previous to 10-20-39) (Not shown)	C-9078-5
104169	54	NUT for Magnet Cores	8265-359
189109	56	BACK STRAP COMPLETE with Insulation and Rivets	8162-257
	57	TERMINAL POST COMPLETE with Nuts and Washers (Inc. 1-57a, 3-22, and 3-23)	12471-
52863	57a	TERMINAL POST ONLY, for Ref. 57	8098-982
	58	TERMINAL POST COMPLETE with Nuts, Washers and Bushing (Inc. 1-58b, 1-21, 2-22, 4-23, 2-24, 1-33, 2-59 and 1-60) for use with Resistor 1-1/2 in. long	12451-

UNION SWITCH & SIGNAL CO.

PIECE	REF.	DESCRIPTION	DWG. REF.
	58a	TERMINAL POST COMPLETE with Nuts, Washers and Bushing (Inc. 1-58c, 1-21, 2-22, 4-23, 2-24, 1-33, 2-59 and 1-60) for use with Resistor 1-7/8 in. long	12451-
226412	58b	TERMINAL POST ONLY, 3-5/8 in. long, for Refs. 58 and 92	8094-2207
226413	58c	TERMINAL POST ONLY, 4 in. long, for Ref. 58a	8094-2207
	58d	TERMINAL POST COMPLETE with Nuts, Washers and Bushing (Inc. 1-58e, 1-21, 3-22, 2-23, 1-33, 2-59 and 1-60) for use with Resistor 1-1/2 in. long	12451-
210080	58e	TERMINAL POST ONLY, 3-5/16 in. long, for Ref. 58d	8094-2207
78530	59	WASHER	8078-1092
185961	60	BUSHING, 1-7/16 in. long	8095-678
191571	61	RESISTANCE UNIT (30-Ohms), 1-7/8 in. long	9065-245
189149	61a	RESISTANCE UNIT (50-Ohms), 1-1/2 in. long	9065-245
189105	61b	RESISTANCE UNIT (120-Ohms), 1-1/2 in. long	9065-245
191875	61c	RESISTANCE UNIT (135-Ohms), 1-1/2 in. long	9065-245
189104	61d	RESISTANCE UNIT (200-Ohms), 1-1/2 in. long	9065-245
191703	61e	RESISTANCE UNIT (900-Ohms), 1-1/2 in. long	9065-245
207879	61f	RESISTANCE UNIT (80-Ohms), 1-1/2 in. long	9065-245
214991	61g	RESISTANCE UNIT (1-Ohm), 1-1/2 in. long	9065-245
217465	61h	RESISTANCE UNIT (250-Ohms), 1-1/2 in. long	9065-245
215253	61j	RESISTANCE UNIT (6-Ohms), 1-1/2 in. long	9065-245
217235	61k	RESISTANCE UNIT (750-Ohms), 1-1/2 in. long	9065-245
184680	62	COIL LOCK	8735-784
180849	63	NAME PLATE for "DN-11" Relays	8225-422
	64	No. 4-40 x 1/4 in. Rd. Hd. Self Tapping Screw (Tin Pl.)	
137935	65	SCREW (Used in place of Ref. 36 when installed)	8098-1289
159815	66	LOCK WASHER	8486-395
180795	67	WASHER (One placed on top of each Coil, under Coil lock, when required)	7828-176
142777	68	TAG (Marked +)	8988-75
173292	69	WALL TYPE SHOCK ABSORBER BASE COMPLETE for 4 Pt. Relays	12404-28
223715	69a	SHELF TYPE SHOCK ABSORBER BASE COMPLETE for 4 Pt. Relays	12404-49
213530	69b	WALL TYPE SHOCK ABSORBER BASE COMPLETE for 4 Pt. Relays arranged per Views "U", "X", "T" and "N"	12404-28

UNION SWITCH & SIGNAL CO.

PIECE	REF.	DESCRIPTION	DWG. REF.
	70	TERMINAL POST WITH NUTS AND WASHERS (Inc. 1-25, 1-21, 2-22, 4-23, 2-24 and 1-33) for Magnet Lead	12451-
	71	TERMINAL POST WITH NUTS AND WASHERS (Inc. 1-25, 1-21, 2-22, 3-23, 2-24 and 1-33) for Magnet Lead	12451-
178251	72	LOCK WASHER for Ref. 38	8486-405
106328	73	BACK STRAP COMPLETE	8162-270
	74	TERMINAL BLOCK WITH NUTS AND WASHERS (Inc. 2-22, 8-23, 4-24 and 1-74a)	9968-1100
181832	74a	TERMINAL BLOCK with two posts for Ref. 74 (Without Nuts and Washers)	9968-1100
	75	MACHINE SCREW, No. 10-30 x 5/8 in. Rd. Hd. S. (Tin Pl.) with No. 10 Plain S. Lock Washer (1/16 in. x 3/64 in.) (Tin Pl.) and Nut Ref. 76	
73488	76	NUT for Ref. 75	8265-111
106336	77	MAGNETIC SHUNT	11893-876
106398	86	BACK STRAP COMPLETE	8162-271
102413	87	RECTIFIER	12558-40
141603	88	NUT	8265-253
185878	90	LOCK WASHER	8486-405
196206	91	INSULATING STOP	8750-2724
	92	TERMINAL POST WITH NUTS, WASHERS AND BUSHING (Inc. 1-58b, 1-21, 3-22, 3-23, 1-33, 2-59 and 1-60) for use with Resistor 1-1/2 in. long	12451-
185268	96	BASE WITH GLASS SHIELDS, GASKET, SPRINGS AND MOUNTING PLATE (Inc. 1-96a, 4-9, 1-10, 4-11, 1-97, 4-98, 2-99, 2-99a, 16-100 and 4-101)	C-9078-14
185267	96a	BASE WITH VENTILATOR, COLLARS AND CORNER POSTS (Inc. 1-4, 1-5, 2-6 and 4-7)	10937-6
185266	97	MOUNTING PLATE	C-9437-4
185265	98	BUSHING	8072-779
185274	99	SPRING (For front of Relay)	8124-250
185272	99a	SPRING (For rear of Relay)	8124-250
37417	100	RIVET	10301-21
	101	STUD with Nut Ref. 102 and 1/4 in. Pl. S. Lock Washer (1/8 in. x 1/16 in) (Cad. Pl.)	8114-842
185264	101a	STUD ONLY	8114-842

UNION SWITCH & SIGNAL CO.

PIECE	REF.	DESCRIPTION	DWG. REF.
93420	102	NUT	8265-128
104937	103	BACK STRAP COMPLETE	8162-268
211477	104	RECTIFIER	12558-31
	105	CAP SCREW, 5/16 in. -18 x 1 in. Hex. Hd. S. (Cad. Pl.)	
177468	106	BRACKET COMPLETE	C-9078-25
177537	107	RECTIFIER	C-9135-61
177470	108	SHELF TYPE SHOCK ABSORBER BASE COMPLETE	12404-29
62977	109	SCREW	8098-245

11-25-46

PLATE W-25B

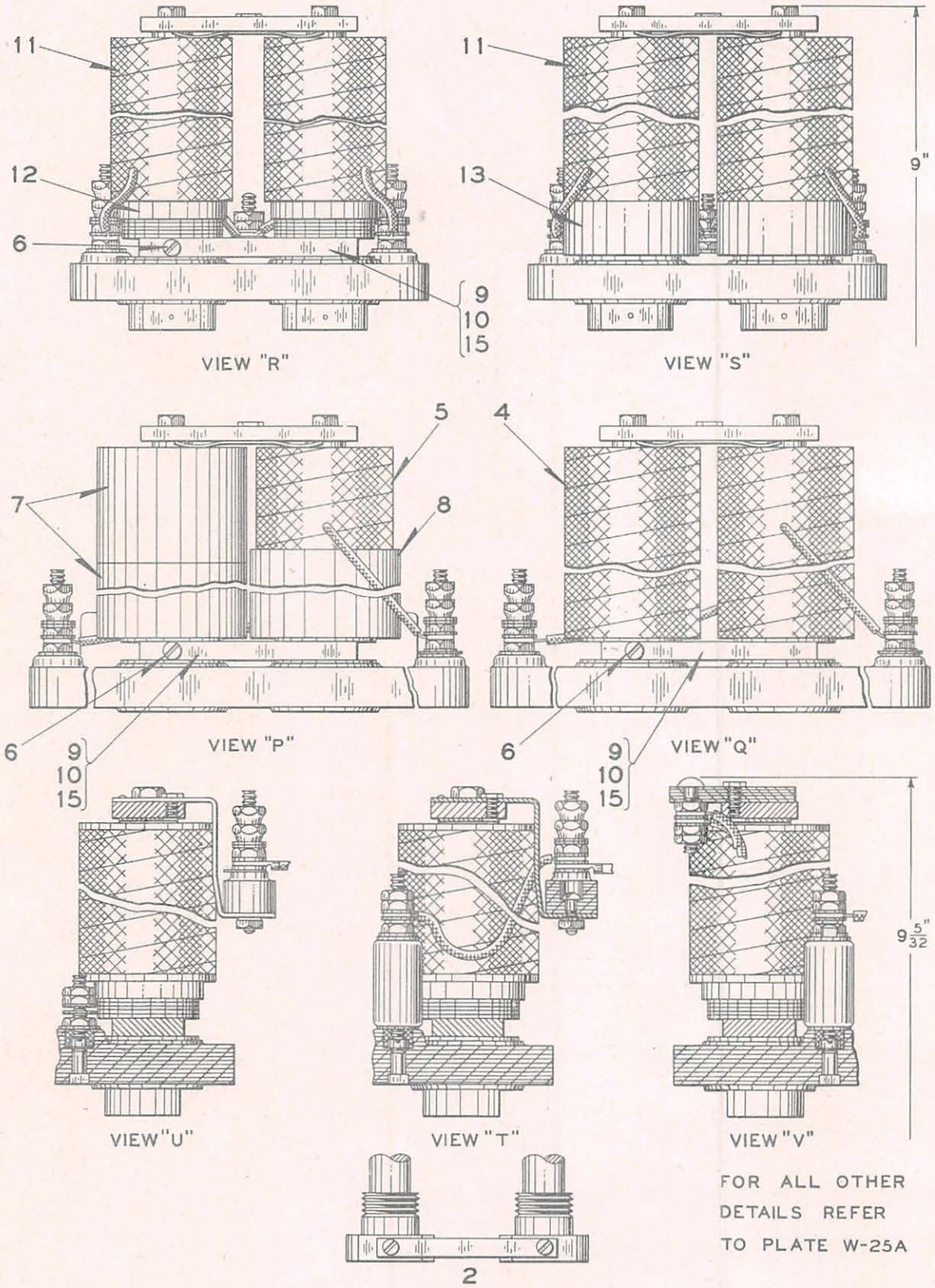

FOR ALL OTHER DETAILS REFER TO PLATE W-25A

"DN-18", "DN-18C", "DN-19" & "DN-19C" 4-PT. RELAYS

2-2-42 11-25-46

UNION SWITCH & SIGNAL CO.

CODED TRACK CIRCUIT CONTROL SYSTEM

STYLES "DN-18", "DN-18C", "DN-19", AND "DN-19C"
NEUTRAL RELAYS (FOUR POINT)

Note:- Unless otherwise specified "low voltage" means Silver Spring to Silver Imp. Carbon Front and Silver Spring to Silver Back.

For Contact Springs and Terminal Posts refer to plate W-35. Plug Couplers for 4-Point Relays will be found on Plate E-5035. For details not shown on this Plate refer to Plate W-25a.

Order by Plate, Piece, Reference and Abbreviated Description

DN-18 SLOW PICK-UP D. C. NEUTRAL RELAY					
PIECE	REF.	CONTACT DESCRIPTION	COILS OHMS PER PAIR	REMARKS	DWG. REF.
172633	L	4F-4B L.V.	225	Slow Release, per View P	C-9077-74
172634	La	4F-4B L.V.	350	Slow Release, per View P	C-9077-74
226581	Lb	4F-4B L.V. (Sil.Imp.Carbon Front and Back posts)	350	Slow Release, per View P	C-9077-74
179492	Lc	4F-4B L.V.	500	Slow Release, per View P	C-9077-74
225482	Ld	4F-4B L.V.(Sil.Imp.Carbon Front and Back posts)	500	Slow Release, per View P	C-9077-74
197217	Le	4F-4B L.V.	1370	Ord. Release, per View Q	C-9077-74
196833	Lf	4F-4B L.V.	2200	Ord.Release, per View Q	C-9077-74
190577	Lg	4F-4B L.V.	3000	Ord. Release, per View Q	C-9077-74
DN-18C SLOW PICK-UP D.C. NEUTRAL RELAY					
213539	M	4F-4B L.V.	L.H. - 3 R.H. - 32	Arranged per View U	C-9077-101
213230	Ma	4F-4B L.V. (Sil.Imp.Carbon Front and back posts	32-32	Arranged per View U	C-9077-101
104538	Mb	4F-4B L.V.	55	Arranged per View R	C-9077-101
213228	Mc	4F-4B L.V.(Sil.Imp.Carbon Front and Back posts)	64	Arranged per View R	C-9077-101
213537	Md	4F-4B L.V.	64	Arranged per View R	C-9077-101
217453	Me	4F-4B L.V.	64	H Relay. Arranged per View V with 250-Ohm Resistance Unit	C-9077-101
217451	Mf	4F-4B L.V.(Sil.Imp.Carbon Front and Back posts)	64	H Relay. Arranged per View V with 250-Ohm Resistance Unit	C-9077-101
223005	Mg	4F-4B (3F-3B L.V., 1F-1B L.V. Heavy Duty)	64	H Relay. Arranged per View V with 250-Ohm Resistance Unit	C-9077-101

UNION SWITCH & SIGNAL CO.

DN-18C SLOW PICK-UP D. C. NEUTRAL RELAY					
PIECE	REF.	CONTACT DESCRIPTION	COILS OHMS PER PAIR	REMARKS	DWG. REF.
223857	Mh	4F-4B (3F-3B L.V., 1F-1B L.V. Heavy Duty)	64	Arranged per View R	C-9077-101
243222	Mj	4F-4B L.V.	125	Arranged per View V with 750-Ohms Resistance Unit	C-9077-101
243223	Mk	4F-4B L.V. (Sil. to Sil.Imp. Carbon front and back posts)	125	Arranged per View V with 750-Ohm Resistance Unit	C-9077-101
243224	Ml	4F-4B (3F-3B L.V., 1F-1B L.V. Heavy Duty)	125	Arranged per View V with 750-Ohm Resistance Unit	C-9077-101
226363	Mm	4F-4B L.V. (Sil. to Sil.Imp. Carbon front and back posts)	200-200	Arranged per View T with 900-Ohm Resistance Unit	C-9077-101
228102	Mn	4F-4B L.V. (Sil. to Sil.Imp. Carbon front and back posts)	200-200	Arranged per View T with 900-Ohm Resistance Unit	C-9077-101
DN-19 SLOW PICK-UP D. C. NEUTRAL RELAY Per View "S" except with one Coil and Ferrule, Ref. 14 on L.H. Core and two Ferrules, Ref. 8 on R.H. Core					
179495	N	4F-4B L.V.	225	Slow Release	C-9077-87
187950	Na	4F-4B L.V.	350	Slow Release	C-9077-87
DN-19C SLOW PICK-UP D. C. NEUTRAL RELAY					
104557	P	4F-4B L.V.	22	"D" Relay in non-resonant decoding system, arranged per View S	C-9077-102
223787	Pa	4F-4B L.V.	55	Decoding Relay for 2 codes in series. Arranged per View S with 250-Ohm Resistance Unit mounted per view V.	C-9077-102

PIECE	REF.	DESCRIPTION	DWG. REF.
	2	MAGNET CORES for "DN-18", "DN-18C" and "DN-19C" Relays.....	C-9078-
177480	3	NAME PLATE for "DN-18" and "DN-18C" Relays (Not shown).....	8225-409
181489	3a	NAME PLATE for "DN-19" and "DN-19C" Relays (Not shown).....	8225-435
190576	4	MAGNET COIL COMPLETE (1500-Ohms) for Ref. Lg.....	8133-441
197216	4a	MAGNET COIL COMPLETE (685-Ohms) for Ref. Le.....	8133-441
193025	4b	MAGNET COIL COMPLETE (1100-Ohms) for Ref. Lf.....	8133-441

UNION SWITCH & SIGNAL CO.

PIECE	REF.	DESCRIPTION	DWG. REF.
173786	5	MAGNET COIL COMPLETE (350-Ohms) for Refs. La, Lb, and Na.....	8133-410
174007	5a	MAGNET COIL COMPLETE (225-Ohms) for Refs. L and N.....	8133-410
174156	5b	MAGNET COIL COMPLETE (500-Ohms) for Refs. Lc and Ld.....	8133-410
	6	MACHINE SCREW, No. 10-30 x 5/8 in. Fil. Hd. Br. (N.P.)	
176802	7	COPPER TUBING.....	8350-785
176803	8	COPPER TUBING.....	8350-785
173788	9	MAGNET SHUNT.....	8162-243
178601	10	BUSHING.....	11893-641
213390	11	MAGNET COIL COMPLETE (32-Ohms) for Refs. M (R.H.), Ma (R.H. & L.H.), Mc, Md, Me, Mf, Mg, and Mh.....	8133-365
189122	11a	MAGNET COIL COMPLETE (27.5-Ohms) for Refs. Mb and Pa.....	8133-452
213541	11b	MAGNET COIL COMPLETE (3-Ohms) for Ref. M.....	8133-365
171491	11c	MAGNET COIL COMPLETE (200-Ohms) for Refs. Mm and Mn (L.H.)...	8133-365
157895	11d	MAGNET COIL COMPLETE (200-Ohms) for Ref. Mn (R.H.).....	8133-388
211276	11e	MAGNET COIL COMPLETE (11-Ohms) for Ref. P.....	8133-432
206908	11f	MAGNET COIL COMPLETE (250-Ohms) for Refs. Mj, Mk, Ml.....	8133-432
211229	12	FERRULE (5/16 in. thick) for Refs. M, Ma, Mb, Mc, Md, Me, Mf, & Mh	8350-785
213579	12a	FERRULE (1/2 in. thick) for Refs. Mg, Mj, Mk, Ml, Mm, and Mn.....	8350-785
211275	13	FERRULE (15/16 in. thick) for Refs. P and Pa.....	8350-785
179496	14	FERRULE (2-11/16 in. thick) for Refs. N and Na.....	8350-785
242717	15	SCREW (used with magnetic shunt, Ref. 9) (Not shown).....	8098-1147

For all other details refer to Plate W-25A.

11-25-46

PLATE W-25E

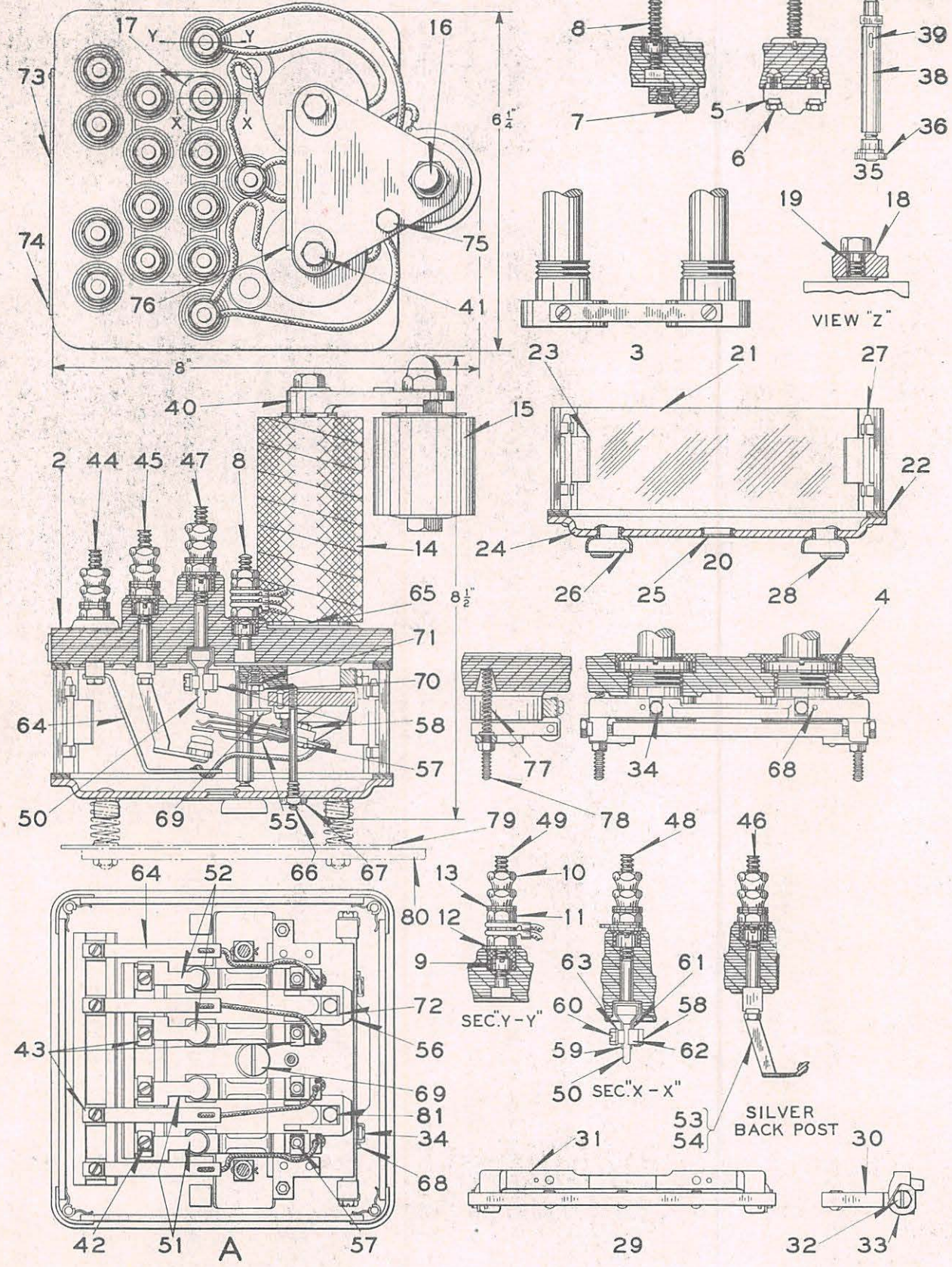

11-25-46
2-2-42

"DN-11P" POWER TRANSFER RELAY

UNION SWITCH & SIGNAL CO.

CODED TRACK CIRCUIT CONTROL SYSTEM

STYLE "DN-11P" POWER TRANSFER RELAY
(FOUR POINT)

For Plug Couplers refer to Plate E-5035.

Note:- Each Style "DN-11P" Relay must be equipped with Shock Absorber Base. Customer should specify type desired by referring to Ref. 79 or 80.

Order by Plate, Piece, Reference and Abbreviated Description

STYLE "DN-11P" POWER TRANSFER RELAY.....Dwg. C-9077-109

PIECE	REF.	CONTACT DESCRIPTION	COILS OHMS	RECTIFIER REF.	REMARKS
220131	B	4F-4B L.V. P-T (Sil.Imp. Carbon front and back posts)	75-75	15a	L.H. Core shimmed per View "Z"
228615	Ba	4F-4B L.V. P-T (Sil.Imp. Carbon front and back posts)	75-75	15	L.H. Core shimmed per View "Z". Without stick contact adjustment.
236368	Bb	4F-4B L.V. (2F-2B P-T and 2F-2B Std.) (Sil.Imp. Carbon front posts; two sil. and two sil. imp. carbon back posts.)	75-75	15a	L.H. Core shimmed per View "Z". References for standard contacts will be found on Plate W-35.
214021	Bc	4F-4B L.V. P-T (Sil.Imp. Carbon front and back posts)	125-125	15	
220787	Bd	4F-4B L.V. P-T (Sil.Imp. Carbon front post and silver back post)	125-125	15	

PIECE	REF.	DESCRIPTION	DWG. REF.
156889	2	TOP PLATE without Cores.....	C-9078-13
156897	3	PAIR OF MAGNET CORES.....	C-9078-6
104169	4	NUT.....	8265-359
185878	5	LOCK WASHER.....	8486-405
142673	6	SCREW.....	8098-1300
196206	7	INSULATING STOP.....	8750-2724
	8	TERMINAL POST WITH NUTS AND WASHERS (Inc. 1-8a, 1-9, 3-11, 1-12, and 3-13).....	12451-
122782	8a	TERMINAL POST ONLY.....	8094-1192
72948	9	NUT.....	8109-383
29101	10	NUT.....	8109-193
29103	11	NUT.....	8109-194

11-25-46

UNION SWITCH & SIGNAL CO.

PIECE	REF.	DESCRIPTION	DWG. REF.
69705	12	WASHER	7828-287
29102	13	WASHER	7828-139
138111	14	MAGNET COIL (125-Ohms) for Refs. Bc and Bd	8133-339
137703	14a	MAGNET COIL (75-Ohms) for Refs. B, Ba and Bb	8133-339
196315	15	RECTIFIER for Refs. Ba, Bc and Bd	12558-32
196450	15a	RECTIFIER for Refs. B and Bb	12558-30
141603	16	NUT	8265-253
142777	17	TAG (Orders should specify marking desired)	8988-75
196812	18	SHIM WASHER	7828-176
25107	19	SHIM	C-7459-2
149060	20	BASE COMPLETE (Inc. 1-20a, 4-21, 1-22 and 4-23)	C-9078-14
149013	20a	BASE WITH STUDS AND VENTILATOR (Inc. 1-24, 1-25, 2-26, 4-27 and 4-28)	10937-6
142646	21	GLASS SHIELD	8163-294
149034	22	GASKET	8078-1451
142653	23	SHIELD SUPPORT COMPLETE	10932-29
149012	24	BASE PLATE ONLY	10937-6
34340	25	VENTILATOR	C-7459-6
108066	26	COLLAR	8350-941
131216	27	CORNER STUD	8114-632
131215	28	SUPPORT STUD	8114-631
218614	29	ARMATURE AND BRACKET COMPLETE (Inc. 1-30, 1-31, 2-32 and 2-33) (For Refs. B, Ba, Bc and Bd)	C-9078-7
236430	29a	ARMATURE AND BRACKET COMPLETE (Inc. 1-30a, 1-31, 2-32, and 2-33) (For Ref. Bb)	C-9078-7
218612	30	ARMATURE COMPLETE	8157-470
236429	30a	ARMATURE COMPLETE	8157-495
218613	31	ARMATURE BRACKET	8303-100
159814	32	PIVOT SCREW	8378-354
159815	33	LOCK WASHER	8486-395
195913	34	MACHINE SCREW, No. 8-36 x 1/2 in. Hex. Hd. Br. (N.P.) with Lock Washer. Ref. 34a	8098-1300
185878	34a	LOCK WASHER	8486-405

UNION SWITCH & SIGNAL CO.

PIECE	REF.	DESCRIPTION	DWG. REF.
	35	CENTER POST COMPLETE (Inc. 1-9, 1-35a and 1-36)	8098-
161180	35a	CENTER POST WITH SLEEVE AND COTTER (Inc. 1-37, 1-38 and 1-39)	8098-1299
138218	36	NUT	8265-252
142644	37	CENTER POST ONLY	8098-1299
142632	38	INS. SLEEVE	8095-631
	39	COTTER PIN, 1/16 in. x 3/8 in. (Tin Pl.)	
218622	40	BACKSTRAP	8162-278
	41	CAP SCREW, 5/16 in. -18 x 3/4 in. Hex. Hd. (Cad. Pl.)	
62977	42	SCREW	8098-845
134516	43	LOCK WASHER	8486-368
	44	TERMINAL POST WITH NUTS AND WASHERS (Inc. 1-44a, 1-9, 2-10, 1-11, 1-12, 2-13, 1-42 and 1-43)	12451-
131234	44a	TERMINAL POST ONLY	8094-2125
	45	TERMINAL POST WITH NUTS AND WASHERS (Inc. 1-45a, 1-9, 2-10, 1-11, 1-12, 2-13, 1-42 and 1-43)	12451-
142631	45a	TERMINAL POST ONLY	8094-2125
	46	TERMINAL POST WITH NUTS AND WASHERS (Inc. 1-46a, 1-9, 2-10, 1-11, 1-12, 2-13, 1-42 and 1-43) For use with Back Post having Silver Contact Tip	12451-
220903	46a	TERMINAL POST ONLY	8094-2125
	47	TERMINAL POST WITH NUTS AND WASHERS (Inc. 1-47a, 1-9, 2-10, 1-11, 1-12 and 2-13)	12451-
131237	47a	TERMINAL POST ONLY	8094-1192
	48	TERMINAL POST WITH NUTS AND WASHERS (Inc. 1-47a, 1-9, 2-10, 1-11, 1-12 and 3-13)	12451-
	49	TERMINAL POST WITH NUTS AND WASHERS (Inc. 1-49a, 1-9, 2-10, 2-11, 1-12 and 4-13)	12451-
113978	49a	TERMINAL POST ONLY	8094-1192
196406	50	CONTACT TIP (Sil. Imp. Carbon)	8341-242
218620	51	L. H. BACK POST COMPLETE (Sil. Imp. Carbon Tip)	8094-2415
218621	52	R. H. BACK POST COMPLETE (Sil. Imp. Carbon Tip)	8094-2415
220904	53	L. H. BACK POST COMPLETE (Silver Tip)	8094-2425
220905	54	R. H. BACK POST COMPLETE (Silver Tip)	8094-2425
196397	55	FRONT AND BACK CONTACT SPRING COMPLETE	8385-2463

UNION SWITCH & SIGNAL CO.

PIECE	REF.	DESCRIPTION	DWG. REF.
150113	56	CONTACT SPRING SUPPORT	9968-849
165933	57	SCREW WITH NUT AND LOCK WASHER (Inc. 1-57a, 1-43 and 1-58)	12471-32
150166	57a	SCREW ONLY for Ref. 57	8098-550
151836	58	NUT	8109-445
131245	59	FRONT CONTACT POST (Contact Holder)	8094-2122
	60	SCREW COMPLETE for attaching Front Contact Tip to Contact Holder (Inc. 1-60a, 1-43, 1-58, 1-62 and 1-63)	12471-
57996	60a	SCREW ONLY	8098-845
134400	61	NUT LOCK	8486-371
173737	62	NUT LOCK	8486-403
20686	63	WASHER	7828-108
218619	64	CONNECTOR WITH FLEX. CONNECTOR	8064-631
168826	65	WASHER	8078-1499
	66	SHIPPING SCREW with Nut Ref. 67	12471-
142642	66a	SHIPPING SCREW ONLY	8098-1298
537	67	NUT	8109-1
57497	68	DOWEL PIN	8097-872
	69	BACK STOP SCREW WITH NUT AND LOCK WASHER (Inc. 1-69a, 1-70 and 1-71)	12471-
149076	69a	BACK STOP SCREW ONLY	8098-549
1506	70	NUT	8109-12
178251	71	NUT LOCK	8486-405
149339	72	LOCK WASHER	8486-368
180849	73	NAME PLATE	8225-422
	74	SCREW, No. 4-40 x 1/4 in. Rd. Hd. (Tin Pl.)	
137935	75	SCREW	8098-1289
184680	76	COIL LOCK	8735-784
135953	77	SPRING	8124-260
	78	SCREW with Nut Ref. 70	12471-
196408	78a	SCREW ONLY	8098-1411
223715	79	SHOCK ABSORBER BASE for Shelf Mounting	12404-49
213530	80	SHOCK ABSORBER BASE for Wall Mounting	12404-28
142673	81	SCREW	8098-1300

PLATE W-30

FOR ALL OTHER DETAILS
REFER TO PLATES W-25A
AND W-25B

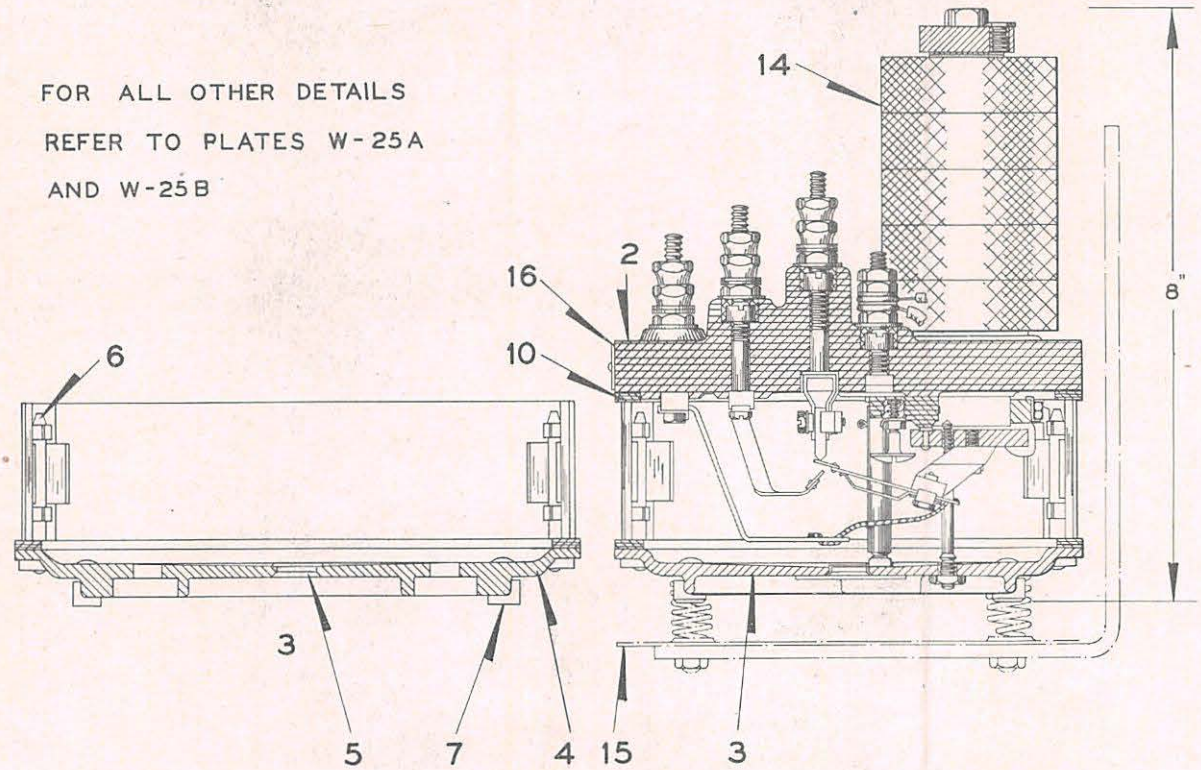

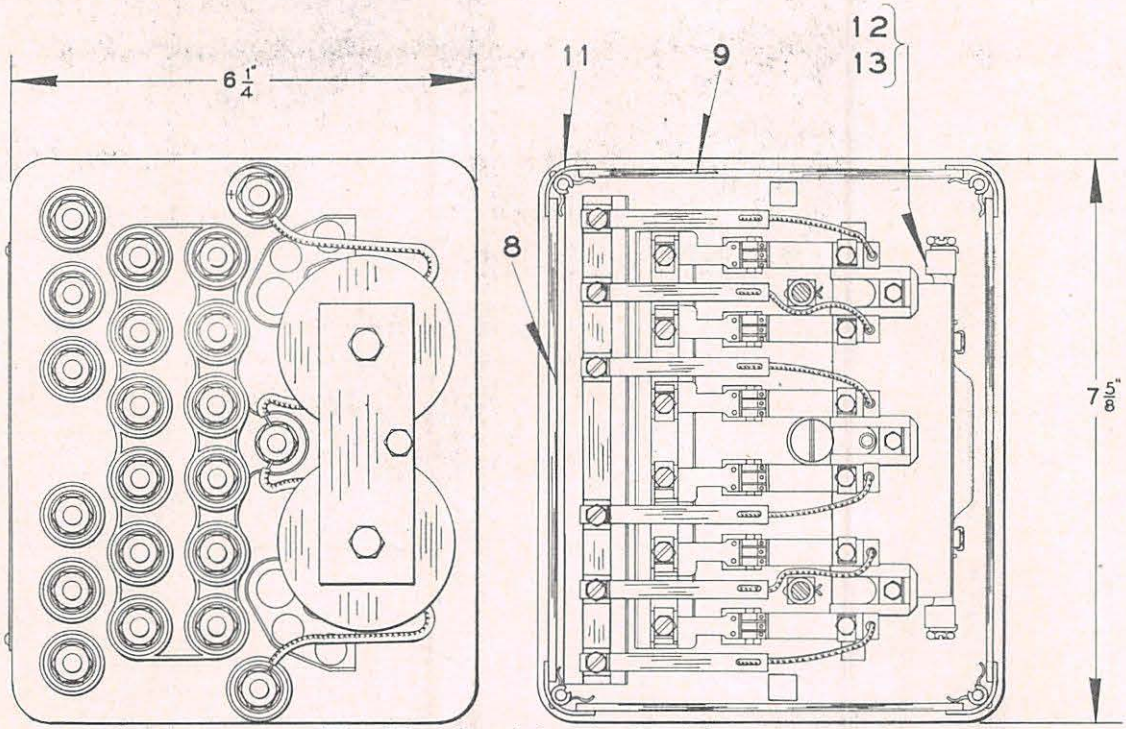

2-2-42
9-9-40
11-25-46

E, F, G, H, J & K
STYLES "DN-11", "DN-11C", "DN-18", "DN-18C", "DN-19", AND "DN-19C" RELAYS. (SIX POINT)

UNION SWITCH & SIGNAL CO.

CODED TRACK CIRCUIT CONTROL SYSTEM
STYLE "DN-11", "DN-11C", "DN-18", "DN-18C" AND "DN-19C" D.C.
NEUTRAL RELAYS
(SIX POINT)

Note:- Unless otherwise specified "low voltage" means Silver Spring to Silver Imp. Carbon Post Front and Silver to Silver Back.

For Plug Couplers refer to Plate E-5035.
For Contact Springs and Terminal Posts refer to Plate W-35.
For details not shown on this Plate refer to Plates W-25A and W-25B.

Order by Plate, Piece, Reference and Abbreviated Description

STYLE "DN-11" D. C. NEUTRAL RELAY					
PIECE	REF.	CONTACT DESCRIPTION	COILS OHMS PER PAIR	REMARKS	DWG. REF.
175021	E	6F-6B L. V.	1	Quick Acting. Coils connected in multiple.	C-9077-64
224632	Ea	6F-6B L.V.	2QA	Special coils connected in multiple.	C-9077-106
166158	Eb	6F-6B L.V.	4	Quick Acting	C-9077-15
176373	Ec	6F-6B L.V.	9		C-9077-64
223800	Ed	6F-6B L.V. (Sil.Imp. Carbon front and back posts)	40	"SA" Relay. Slow Release. With 750-Ohm Resis.Unit per view "V" of Plate W-25A	C-9077-106
226356	Ee	6F-6B L.V.	40	"SA" Relay. Slow Release. With 750-Ohm Resis. Unit per View V of Plate W-25A	C-9077-106
166906	Ef	6F-6B L.V.	250		C-9077-15
168245	Eg	6F-6B L.V.	250	Slow Release	C-9077-15
211299	Eh	6F-6B L.V. (Sil.Imp. Carbon front and back posts)	250	Slow Release	C-9077-64
213707	Ej	6F-6B L.V. (Sil.Imp. Carbon front and back posts)	250		C-9077-64
175697	Ek	6F-2B L.V.	400	Slow Release	C-9077-64
213860	El	6F-6B L.V. (Sil.Imp. Carbon front and back posts)	400	Slow Release	C-9077-64
159871	Em	6F-6B L.V.	500		C-9077-15
217661	En	6F-6B L.V. (Sil.Imp. Carbon front and back posts)	500		C-9077-106
159864	Eo	6F-6B L.V.	670		C-9077-15

UNION SWITCH & SIGNAL CO.

STYLE "DN-11" D. C. NEUTRAL RELAY (cont'd.)					
PIECE	REF.	CONTACT DESCRIPTION	COILS OHMS PER PAIR	REMARKS	DWG. REF.
158263	Ep	6F-6B L.V.	1000		C-9077-15
160025	Eq	6F-6B L.V. (Sil.Imp. Carbon front and back posts)	1000		C-9077-15
243745	Er	6F-6B L. V. (Sil.Imp. Carbon front posts; two S.I.C. back posts and four sil. heavy duty back posts)	1000		C-9077-106
STYLE "DN-11C" D.C. NEUTRAL RELAY					
215069	F	6F-6B L.V. (Sil.Imp. Carbon front and back posts)	1	"VM" Relay. With 1-ohm Resis.Unit per view "W" of Plate W-25A except using backstrap Ref. 18 in place of Ref. 56. (Coils connected in multiple)	C-9077-113
188698	Fa	6F-6B L.V. (Sil.Imp.Carbon front and back posts)	55	"J" Relay (0.050 in. Contact Opening)	C-9077-113
221112	Fb	6F-6B L.V.	55		C-9077-113
221810	Fc	6F-6B L.V. (Sil.Imp. Carbon front and back posts)	55	0.050 in. contact opening, With 250-Ohm Resistance Unit per view "V" of Plate W-25A	C-9077-113
221811	Fd	6F-6B L.V.	55	With 250-Ohm Resis. Unit per view "V" of Plate W-25A	C-9077-113
223822	Fe	6F-6B L.V. (5F-5B L.V., 1F-1B Heavy Duty)	55	With 250-Ohm Resis. Unit per View "V" of Plate W-25A	C-9077-113
189933	Ff	6F-6B L.V. (Sil.Imp. Carbon front and back posts)	60	"SA" Relay (With 50-ohm Resis. Unit per view "W" of Plate W-25A and one washer Ref. 67 of Plate W-25A on top of each coil)	C-9077-113
191651	Fg	6F-6B L.V. (Sil.Imp. Carbon front and back posts)	60	"SA" Relay (With 30-ohm Resis. Unit per view "W" of Plate W-25A and one Washer Ref. 67 of Plate W-25A on top of each coil)	C-9077-113
191881	Fh	6F-6B L.V. (Sil.Imp. Carbon front and back posts)	60	"SA" Relay (With 900-ohm Resis.Unit per view "W" of Plate W-25A and one Washer Ref. 67 of Plate W-25A on top of each coil)	C-9077-113

UNION SWITCH & SIGNAL CO.

STYLE "DN-11C" D.C. NEUTRAL RELAY (cont'd.)					
PIECE	REF.	CONTACT DESCRIPTION	COILS OHMS PER PAIR	REMARKS	DWG. REF.
191882	Fj	6F-6B L.V. (Sil.Imp. Carbon front and back posts)	60	"SA" Relay (With 135-ohm Resis.Unit per view "W" of Plate W-25A and one washer Ref. 67 of Plate W-25A on top of each coil)	C-9077-113
206945	Fk	6F-6B L.V. (Sil.Imp. Carbon front and back posts)	60	"SA" Relay (With 80-ohm Resis.Unit per view "W" of Plate W-25A and one Washer Ref. 67 of Plate W-25A on top of each coil)	C-9077-113
220919	Fl	6F-6B L.V. (2F-2B L.V., 4F L.V. and 4B Heavy Duty)	60	With 50-Ohm Resis. Unit per view "V" of Plate W-25A and one Washer Ref. 67 of Plate W-25A on top of each coil	C-9077-113
188847	Fm	6F-4B L.V.	100	"H" Relay (With 50-ohm Resis. Unit per view "W" of Plate W-25A)	C-9077-113
207097	Fn	6F-6B L.V.	100	"H" Relay. With 50-ohm Resis.Unit per view "W" of Plate W-25A	C-9077-113
257118	Fo	6F-6B L.V.	110	8 Volt "SA" Relay	C-9077-113
212523	Fp	6F-6B L.V.	125	"H" Relay (Special Slow Release. Coils connected in multiple) With 200 ohm Resis.Unit per view "V" of Plate W-25A except using Backstrap Ref. 18 in place of Ref. 56.	C-9077-113
257119	Fq	6F-6B L.V.	175	10 Volt "SA" Relay	C-9077-113
239952	Fr	6F-6B L.V.	250	12 Volt "SA" Relay	C-9077-113
STYLE "DN-18" D. C. NEUTRAL RELAY					
174008	G	6F-6B L.V.	225	Slow Pick Up, Slow Release. One Coil (Arranged per View "P" Plate W-25B)	C-9077-73
172878	Ga	6F-6B L.V.	350	Slow Pick Up, Slow Release. One Coil (Arranged per View "P" Plate W-25B)	C-9077-73
220940	Gb	6F-6B L.V. (Sil.Imp. Carbon front and back posts)	350	Slow Pick Up, Slow Release one Coil (Arranged per view "P" Plate W-25B)	C-9077-73

UNION SWITCH & SIGNAL CO.

STYLE "DN-18" D.C. NEUTRAL RELAY (cont'd.)					
PIECE	REF.	CONTACT DESCRIPTION	COILS OHMS PER PAIR	REMARKS	DWG. REF.
174157	Gc	6F-6B L.V.	500	Slow Pick-Up, Slow Release. One Coil (Arranged per View "P" Plate W-25B)	C-9077-73
237166	Gd	6F-6B L.V. (Sil.Imp. Carbon front and back posts)	500	Slow-Pick-Up, Slow Release. One Coil (Arranged per view "P" Plate W-25B)	C-9077-73
183895	Ge	6F-6B L.V.	2200	Slow Pick-Up, Ord. Release (Arranged per view "Q" Plate W-25B)	C-9077-73
213987	Gf	6F-6B L.V.	3000	Slow Pick-Up, Ord. Release (Arranged per view "Q" Plate W-25B)	C-9077-73
215565	Gg	6F-6B L.V. (Sil.Imp. Carbon front and back posts)	3000	Slow Pick-Up, Ord. Release (Arranged per view "Q" Plate W-25B)	C9077-73
STYLE "DN-18C" D. C. NEUTRAL RELAY					
213540	H	6F-6B L.V.	3 L.H. 32 R.H.	Arranged per View "U" of Plate W-25B	C-9077-101
213231	Ha	6F-6B L.V. (Sil.Imp. Carbon front and back posts)	32-32	Arranged per View "U" of Plate W-25B	C-9077-101
213229	Hb	6F-6B L.V.(Sil. Imp. Carbon front and back posts)	64	Arranged per View "R" of Plate W-25B	C-9077-101
213538	Hc	6F-6B L.V.	64	Arranged per View "R" of Plate W-25B	C-9077-101
217452	Hd	6F-6B L.V. (Sil. Imp. Carbon front and back posts)	64	"H" Relay. Arranged View "V" of Plate W-25B with 250-Ohm Resis. Unit	C-9077-101
217454	He	6F-6B L.V.	64	"H" Relay. Arranged per view "V" Plate W-25B with 250-Ohm Resis. Unit	C-9077-101
243225	Hf	6F-6B L.V.	125	Arranged per view "V" of Plate W-25B with 750-Ohms Resis. Unit	C-9077-101
243226	Hg	6F-6B L.V. (Sil.Imp. Carbon front and back posts)	125	Arranged per View "V" of Plate W-25B with 750-Ohms Resis. Unit	C-9077-101
226778	Hh	6F-6B L.V. (Sil. Imp. Carbon front and back posts)	200-200	Arranged per View "T" of Plate W-25B with 900-Ohm Resis. Unit	C-9077-101

UNION SWITCH & SIGNAL CO.

STYLE "DN-19 D.C. NEUTRAL RELAY					
PIECE	REF.	CONTACT DESCRIPTION	COILS OHMS PER PAIR	REMARKS	DWG. REF.
187723	J	6F-6B L.V.	225	Slow Release, One Coil (Arranged per view "N" Plate W-25B)	C-9077-88
STYLE "DN-19C" D.C. NEUTRAL RELAY					
223788	K	6F-6B L.V.	55	Decoding Relay for 2 codes in series. Arranged per view "S" of Plate W-25B with 250-ohm Resis. Unit mounted per view "V" of Plate W-25B	C-9077-102

PIECE	REF.	DESCRIPTION	DWG. REF.
156887	2	TOP PLATE, without Cores	C-9078-9
142670	3	BASE, WITH GLASS SHIELDS AND GASKET (Inc. 1-3a, 2-8, 2-9, 1-10 and 4-11)	C-9078-6
142667	3a	BASE, WITH VENTILATOR, CORNER AND SUPPORTING STUDS (Inc. 1-4, 1-5, 4-6 and 4-7)	C-9078-10
142666	4	BASE ONLY	C-9078-10
34340	5	VENTILATOR	C-7459-6
142633	6	CORNER STUD	8114-632
145116	7	SUPPORTING STUD	8114-631
142645	8	GLASS SHIELD (Side)	8163-294
142646	9	GLASS SHIELD (End)	8163-294
142636	10	GASKET	8078-1435
142653	11	SHIELD SUPPORT	10932-29
142654	12	ARMATURE COMPLETE with Bracket, Pivot Screws and Lock Washers (Inc. 1-13 of this Plate and 2-19, 1-20 and 2-66 of Plate W-25A)	C-9078-7
142649	13	ARMATURE ONLY for Ref. 12	8157-336
153693	14	MAGNET COIL COMPLETE (50-Ohms) for Refs. Fm and Fn	8133-452
189122	14a	MAGNET COIL COMPLETE (27.5-Ohms) for Refs. Fa, Fb, Fc, Fd, Fe, and K	8133-452
159678	14b	MAGNET COIL COMPLETE (30-Ohms) for Refs. F, Ff, Fg, Fh, Fj, Fk, Fl	8133-339
143067	14c	MAGNET COIL COMPLETE (500-Ohms) for Refs. Ep, Eq, and Er	8133-339

UNION SWITCH & SIGNAL CO.

PIECE	REF.	DESCRIPTION	DWG. REF.
144439	14d	MAGNET COIL COMPLETE (2-Ohms) for Refs. E, Eb and F.....	8133-365
157894	14e	MAGNET COIL COMPLETE (125-Ohms) for Ref. Eg and Eh.....	8133-388
156500	14f	MAGNET COIL COMPLETE (4.5-Ohms) for Ref. Ec.....	8133-365
206908	14g	MAGNET COIL COMPLETE (250-Ohms) for Ref. Fp, Hf and Hg.....	8133-432
138111	14h	MAGNET COIL COMPLETE (125-Ohms) for Ref. Ef and Ej.....	8133-339
157895	14j	MAGNET COIL COMPLETE (200-Ohms) for Refs. Ek, El and Hh (R.H.)	8133-388
174156	14k	MAGNET COIL COMPLETE (500-Ohms) for Ref. Gc and Gd.....	8133-410
190576	14m	MAGNET COIL COMPLETE (1500-Ohms) for Refs. Gf and Gg.....	8133-441
213390	14n	MAGNET COIL COMPLETE (32-Ohms) for Refs. H (R.H.), Ha, Hb, Hc, Hd and He.....	8133-365
213541	14p	MAGNET COIL COMPLETE (3-Ohms) for Ref. H (L.H.).....	8133-365
171491	14q	MAGNET COIL COMPLETE (200-Ohms) for Ref. Hh (L.H.).....	8133-365
169458	14r	MAGNET COIL COMPLETE (4QA-Ohms) for Ref. Ea.....	8133-339
179520	14s	MAGNET COIL COMPLETE (20-Ohms) for Refs. Ed and Ee.....	8133-338
153698	14t	MAGNET COIL COMPLETE (250-Ohms) for Refs. Em and En.....	8133-452
144561	14u	MAGNET COIL COMPLETE (335-Ohms) for Ref.Eo.....	8133-452
212577	14v	MAGNET COIL COMPLETE (55-Ohms) for Ref.Fo.....	8133-365
188858	14w	MAGNET COIL COMPLETE (87.5-Ohms) for Ref.Fq.....	8133-365
191121	14x	MAGNET COIL COMPLETE (125-Ohms) for Ref.Fr.....	8133-365
174007	14y	MAGNET COIL COMPLETE (225-Ohms) for Refs.G and J.....	8133-410
173786	14z	MAGNET COIL COMPLETE (350-Ohms) for Refs.Ga and Gb.....	8133-410
193025	14aa	MAGNET COIL COMPLETE (1100-Ohms) for Ref.Ge.....	8133-441
173293	15	WALL TYPE SHOCK ABSORBER BASE COMPLETE for 6 Pt.Relays.....	12404-28
172590	15a	SHELF TYPE SHOCK ABSORBER BASE COMPLETE for 6 Pt.Relays....	12404-27
180889	16	NAME PLATE for DN-11 and DN-11C Relays.....	8225-424
177479	16a	NAME PLATE for DN-18 and DN-18C Relays.....	8225-408
181488	16b	NAME PLATE for DN-19 and DN-19C Relays.....	8225-434

PLATE W-32

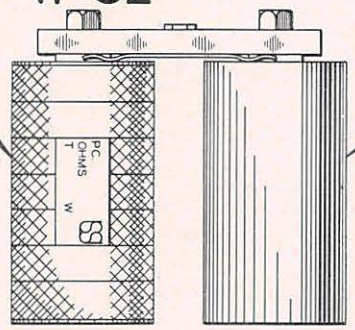

COIL ARRANGEMENT FOR
SLOW ACTING RELAYS
VIEW "Z"

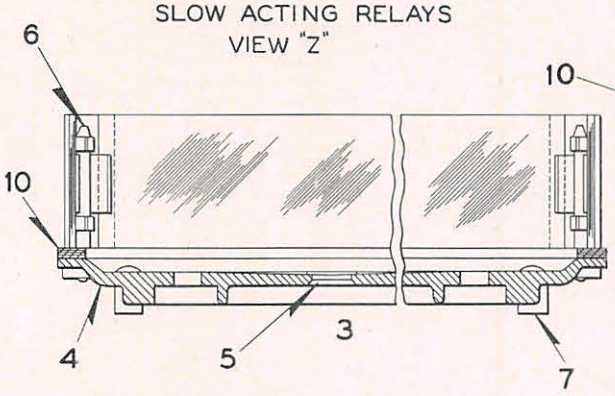

FOR ALL OTHER DETAILS REFER TO
PLATE W-25A

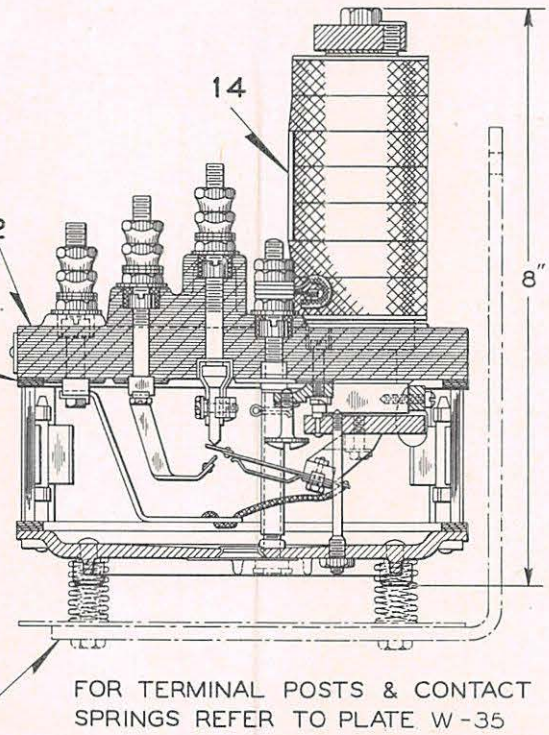

FOR TERMINAL POSTS & CONTACT
SPRINGS REFER TO PLATE W-35

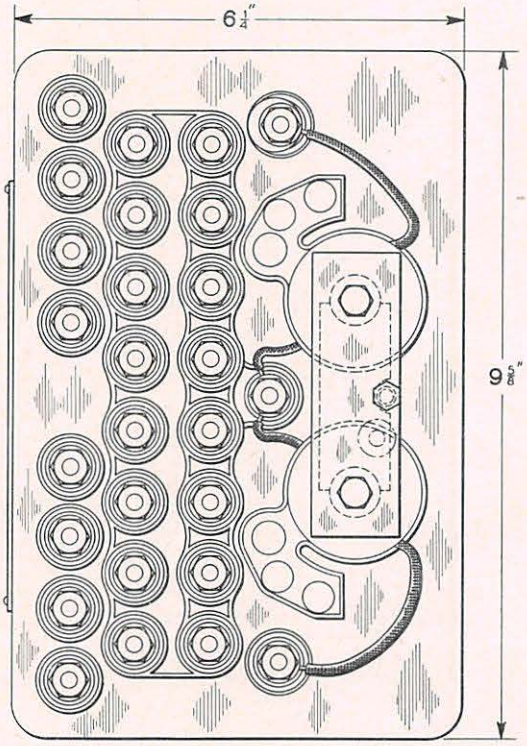

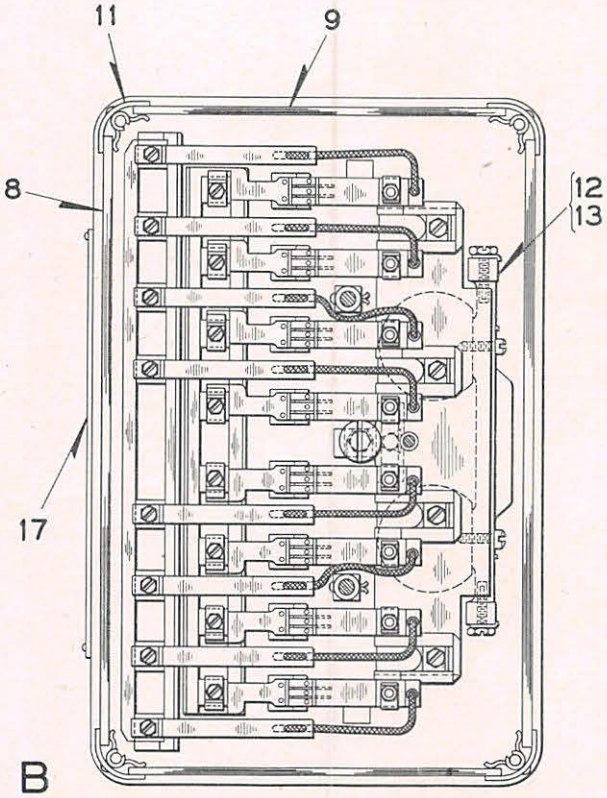

STYLE "DN-11" D.C. NEUTRAL RELAY (8 POINT)

9-9-40 2-2-42 11-25-46

UNION SWITCH & SIGNAL CO.

CODED TRACK CIRCUIT CONTROL SYSTEM
STYLE "DN-11" D.C. NEUTRAL RELAY
(EIGHT POINT)

Note:- Unless otherwise specified "low voltage" means Silver Spring to Silver Imp. Carbon Post Front and Silver to Silver Back.
For Contact Springs and Terminal Posts refer to Plate W-35.
For details not shown on this Plate refer to Plate W-25A.
Plug Couplers for 8-Point Relays will be found on Plate E-5035-1.

Order by Plate, Piece, Reference and Abbreviated Description

STYLE "DN-11" D.C. NEUTRAL RELAY

PIECE	REF.	CONTACT DESCRIPTION	COILS OHMS PER PAIR	REMARKS	DWG.REF.
216353	B	8F-8B L.V.	35 (One Coil)	Slow Release (Using one Coil and One Ferrule per View "Z")	C-9077-48
213859	Ba	8F-6B L.V. (Sil.Imp. Carbon front and back posts)	200 (One Coil)	Slow Release (Using one Coil and One Ferrule per View "Z")	C-9077-48
159870	Bb	8F-8B L.V.	500		C-9077-48
215532	Bc	8F-6B L.V. (Sil. Imp. Carbon front and back posts)	670		C-9077-48
161333	Bd	8F-8B L.V.	1000		C-9077-48

PIECE	REF.	DESCRIPTION	DWG. REF.
156886	2	TOP PLATE, without Cores	C-9078-8
142671	3	BASE, WITH GLASS SHIELDS AND GASKET (Inc. 1-3a, 2-8, 2-9, 1-10 and 4-11)	C-9078-6
142669	3a	BASE, WITH VENTILATOR, CORNER AND SUPPORTING STUDS (Inc. 1-4, 1-5, 4-6 and 4-7)	C-9078-10
142668	4	BASE ONLY	C-9078-10
34340	5	VENTILATOR	C-7459-6
142633	6	CORNER STUD	8114-632
145116	7	SUPPORTING STUD	8114-631
142647	8	GLASS SHIELD (Side)	8163-294
142646	9	GLASS SHIELD (End)	8163-294
142638	10	GASKET	8078-1436
142653	11	SHIELD SUPPORT	10932-29
155487	12	ARMATURE COMPLETE WITH BRACKET, PIVOT SCREWS AND LOCK WASHERS (Inc. 1-13 of this Plate and 2-19, 1-20 and 2-66 of Plate W-25A)	C-9078-7

11-25-46

PLATE W-44 —(CONTINUED)

UNION SWITCH & SIGNAL CO.

PIECE	REF.	DESCRIPTION	DWG. REF.
214031	24a	TERMINAL POST ONLY for Ref.24.....	8094-982
	25	TERMINAL POST COMPLETE with Nuts and Washers (Inc.1-25a, 1-26, 1-27, 1-28, 3-29 and 2-30).....	12451-
115706	25a	TERMINAL POST ONLY for Ref.25.....	8094-1192
60706	26	NUT	

UNION SWITCH & SIGNAL CO.

CODED TRACK CIRCUIT CONTROL SYSTEM
STYLE "DN-11" D.C. NEUTRAL RELAY
(EIGHT POINT)

Note:- Unless otherwise specified "low voltage" means Silver Spring to Silver Imp. Carbon Post Front and Silver to Silver Back.
For Contact Springs and Terminal Posts refer to Plate W-35.
For details not shown on this Plate refer to Plate W-25A.
Plug Couplers for 8-Point Relays will be found on Plate E-5035-1.

Order by Plate, Piece, Reference and Abbreviated Description

STYLE "DN-11" D.C. NEUTRAL RELAY					
PIECE	REF.	CONTACT DESCRIPTION	COILS OHMS PER PAIR	REMARKS	DWG.REF.
216353	B	8F-8B L.V.	35 (One Coil)	Slow Release (Using one Coil and One Ferrule per View "Z")	C-9077-48
213859	Ba	8F-6B L.V. (Sil.Imp. Carbon front and back posts)	200 (One Coil)	Slow Release (Using one Coil and One Ferrule per View "Z")	C-9077-48
159870	Bb	8F-8B L.V.	500		C-9077-48
215532	Bc	8F-6B L.V. (Sil. Imp. Carbon front and back posts)	670		C-9077-48
161333	Bd	8F-8B L.V.	1000		C-9077-48

PIECE	REF.	DESCRIPTION	DWG. REF.
156886	2	TOP PLATE, without Cores	C-9078-8
142671	3	BASE, WITH GLASS SHIELDS AND GASKET (Inc. 1-3a, 2-8, 2-9, 1-10 and 4-11)	C-9078-6
142669	3a	BASE, WITH VENTILATOR, CORNER AND SUPPORTING STUDS (Inc. 1-4, 1-5, 4-6 and 4-7)	C-9078-10
142668	4	BASE ONLY	C-9078-10
34340	5	VENTILATOR	C-7459-6
142633	6	CORNER STUD	8114-632
145116	7	SUPPORTING STUD	8114-631
142647	8	GLASS SHIELD (Side)	8163-294
142646	9	GLASS SHIELD (End)	8163-294
142638	10	GASKET	8078-1436
142653	11	SHIELD SUPPORT	10932-29
155487	12	ARMATURE COMPLETE WITH BRACKET, PIVOT SCREWS AND LOCK WASHERS (Inc. 1-13 of this Plate and 2-19, 1-20 and 2-66 of Plate W-25A)	C-9078-7

UNION SWITCH & SIGNAL CO.

PIECE	REF.	DESCRIPTION	DWG. REF.
155808	13	ARMATURE ONLY for Ref. 12	8157-361
157895	14	MAGNET COIL COMPLETE (200-Ohms) for Ref. Ba	8133-388
144561	14a	MAGNET COIL COMPLETE (335-Ohms) for Ref. Bc	8133-339
177100	14b	MAGNET COIL COMPLETE (35-Ohms) for Ref. B	8133-339
143067	14c	MAGNET COIL COMPLETE (500-Ohms) for Ref. Bd	8133-339
153698	14d	MAGNET COIL COMPLETE (250-Ohms) for Ref. Bb	8133-452
173294	15	WALL TYPE SHOCK ABSORBER BASE COMPLETE for Style "DN-11" Relay (8 Pt.)	12404-28
172591	15a	SHELF TYPE SHOCK ABSORBER BASE COMPLETE for Style "DN-11" Relay (8 Pt.)	12404-27
178061	16	FERRULE for Ref. Ba	8350-785
220441	16a	FERRULE for Ref. B	8350-785
180894	17	NAME PLATE	8225-425

11-25-46

PLATE W-35

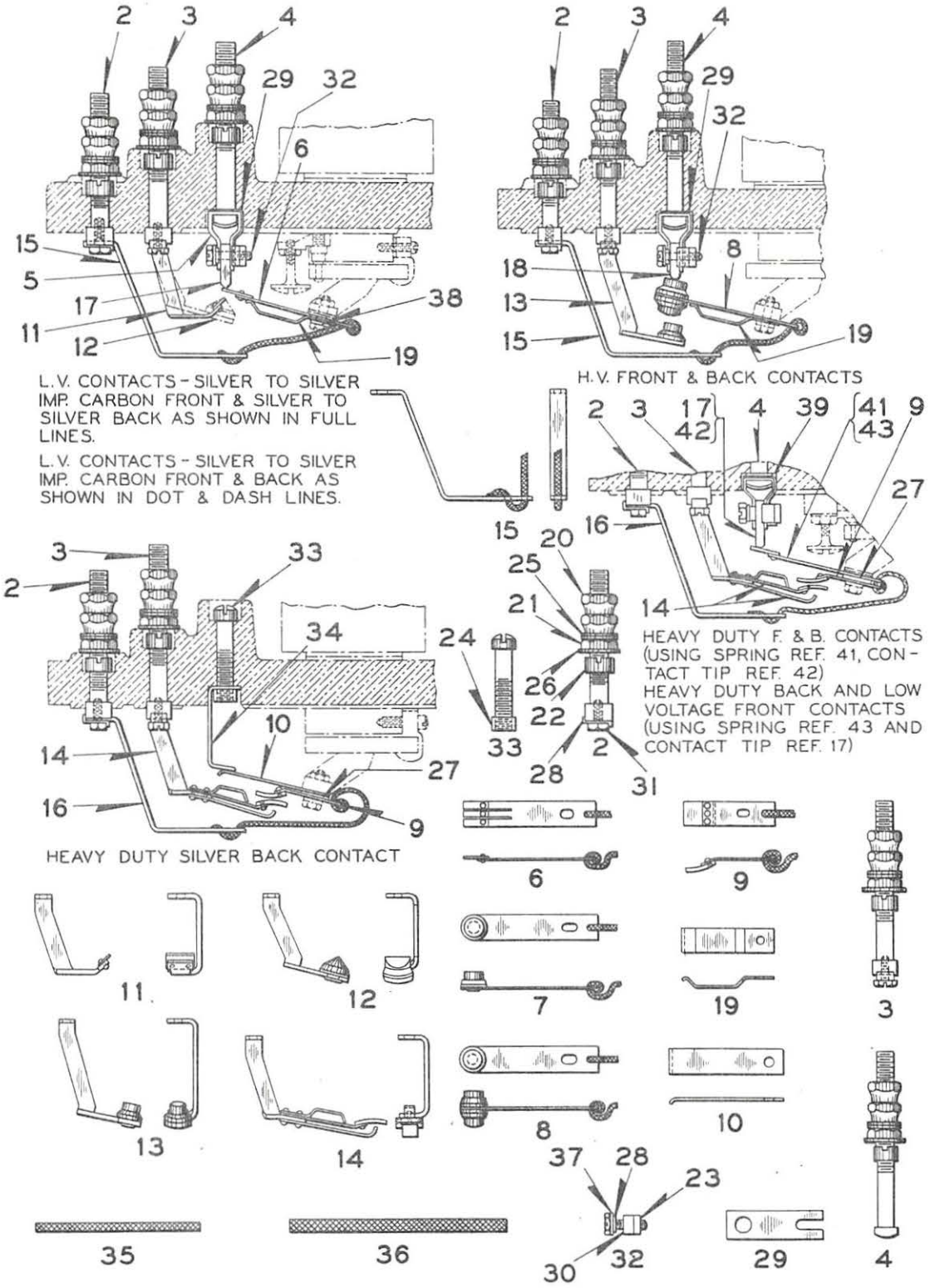

2-2-42
9-9-40 CONTACT SPRINGS & TERMINAL POSTS

UNION SWITCH & SIGNAL CO.

CODED TRACK CIRCUIT CONTROL SYSTEM

STYLE "DN-11", "DN-18" AND "DN-19" RELAYS

DETAIL PARTS

CONTACT SPRINGS AND TERMINAL POSTS

Order by Plate, Piece, Reference and Abbreviated Description Given in Heavy Face Type Only

PIECE	REF.	DESCRIPTION	DWG. REF.
	2	TERMINAL POST WITH NUTS, WASHERS, LOCK WASHER AND SCREW (Inc. 1-2a, 2-20, 1-21, 1-22, 2-25, 1-26, 1-28 and 1-31) for Connector	12451-
131234	2a	TERMINAL POST ONLY, for Ref.2	8094-2125
	3	TERMINAL POST WITH NUTS, WASHERS, LOCK WASHER AND SCREW (Inc. 1-3a, 2-20, 1-21, 1-22, 2-25, 1-26, 1-28 and 1-31) for L.V. or H.V. Back Contact	12451-
142631	3a	TERMINAL POST ONLY, for Ref.3	8094-2125
148207	4	TERMINAL POST WITH NUTS AND WASHERS (Inc.1-4a, 2-20, 1-21, 1-22, 2-25 and 1-26) for L.V. or H.V. Front Contact	12451-**241**
131237	4a	TERMINAL POST ONLY, for Ref.4	8094-1192
131245	5	FRONT TERMINAL POST (Contact Holder)	8094-2122
180974	6	CONTACT SPRING (With Flexible Connector) Low Voltage Front and Back (.010" thick)	8385-2336
180973	6a	CONTACT SPRING (Without Flexible Connector) Low Voltage Front and Back (.010" thick)	8385-2336
189129	6b	CONTACT SPRING (With Flexible Connector) Low Voltage Front and Back (.0089" thick)	8385-2336
189129	6c	CONTACT SPRING (Without Flexible Connector) Low Voltage Front and Back (.0089" thick)	8385-2336
180980	7	CONTACT SPRING (With Flexible Connector) High Voltage Front only	8385-2099
180979	7a	CONTACT SPRING WITH SILVER IMP.CARBON TIP (Without Flexible Connector) High Voltage Front only	8385-2099
180978	8	CONTACT SPRING WITH SILVER IMP.CARBON TIP (With Flexible Connector) High Voltage Front and Back	8385-2098
180977	8a	CONTACT SPRING WITH SILVER IMP.CARBON TIP (Without Flexible Connector) High Voltage Front and Back	8385-2098
	9	CONTACT SPRING (With Flexible Connector) for Heavy Duty Silver Back Contacts	8385-2430
192792	9a	CONTACT SPRING (Without Flexible Connector) for Heavy Duty Silver Back Contacts	8385-2430
192830	10	FLAT SPRING, used with Ref.9	8735-810
131261	11	L.H. BACK POST (Low Voltage) with Silver Tip	8094-2123
131262	11a	R.H. BACK POST (Low Voltage) with Silver Tip	8094-2123
157394	12	L.H. BACK POST (Low Voltage) with Silver Imp.Carbon Tip	8094-2234
157395	12a	R.H. BACK POST (Low Voltage) with Silver Imp.Carbon Tip	8094-2234

UNION SWITCH & SIGNAL CO.

PIECE	REF.	DESCRIPTION	DWG. REF.
145164	13	L.H. BACK POST (High Voltage) with Silver Imp.Carbon Tip.....	8094-2190
145165	13a	R.H. BACK POST (High Voltage) with Silver Imp.Carbon Tip.....	8094-2190
192794	14	L.H. BACK POST, for Heavy Duty Silver Back Contacts.....	8385-2458 ~~8094-1073~~
192795	14a	R.H. BACK POST, for Heavy Duty Silver Back Contacts.....	8385-2458 ~~8094-1073~~
142643	15	CONNECTOR, COMPLETE WITH FLEXIBLE CONNECTOR 2-9/16" LONG.....	8064-631
142674	15a	CONNECTOR,without Flexible Connector.....	8064-631
279518 ~~192929~~	16	CONNECTOR, COMPLETE WITH FLEXIBLE CONNECTOR and with contact and binding post connector 3-3/8" LONG, for Heavy Duty Silver Contacts.....	8064-631
142674 ~~192878~~	16a	CONNECTOR, without Flexible Connector.....	8064-631
158043	17	CONTACT TIP (Silver Imp.Carbon) for Low Voltage.....	8341-476
168308	18	CONTACT TIP (Silver Imp.Carbon) for High Voltage.....	8341-485
180975	19	STOP SPRING.....	8735-769
29101	20	NUT.....	8109-193
29103	21	NUT.....	8109-194
72948	22	NUT.....	8109-383
151836	23	NUT.....	8109-445
410442	24	NUT	
29102	25	WASHER.....	7828-139
69705	26	WASHER.....	7828-287
~~184002~~	~~27~~	~~WASHER, used between Refs.9 and 10, between 9 and 41 and between 9 and 43~~.....	~~7828-378~~
134516	28	LOCK WASHER.....	8486-368
134400	29	LOCK WASHER.....	8486-371
173737	30	LOCK WASHER.....	8486-403
62977	31	SCREW.....	8098-845
216546	32	SCREW COMPLETE for attaching Front Contact Tip to Contact Holder (Inc.1-32a, 1-23, 1-28, 1-30 and 1-37).....	12471-65
57996	32a	SCREW.....	8098-845
	33	MACHINE SCREW NO.14-24 x 1-3/8" Fil.Hd.S. (Tin Pl.) with Nut Ref.24	
192829	34	BRACKET, for Heavy Duty Silver Back Contacts.....	10914-667
152571	35	FLEXIBLE CONNECTOR 2-9/16" LONG.....	10934-87
170447	36	FLEXIBLE CONNECTOR 3-3/8" LONG for Heavy Duty Silver Back Contacts.....	10934-147
20686	37	WASHER.....	7828-108
150140	38	WASHER.....	8486-367
52335	39	WASHER.....	7828-184
142777	40	TAG (Orders should specify marking desired) Not shown.....	8988-75
106289	41	CONTACT SPRING (Without Flexible Connector) Heavy Duty Front Contact.....	8385-2615
106290	42	CONTACT TIP (Silver Imp.Carbon) for Heavy Duty.....	8341-242
150268	43	CONTACT SPRING (Without Flexible Connector) Low Voltage Front Only when used with Heavy Duty Back (.0113" thick).....	8385-2336

PLATE W-40

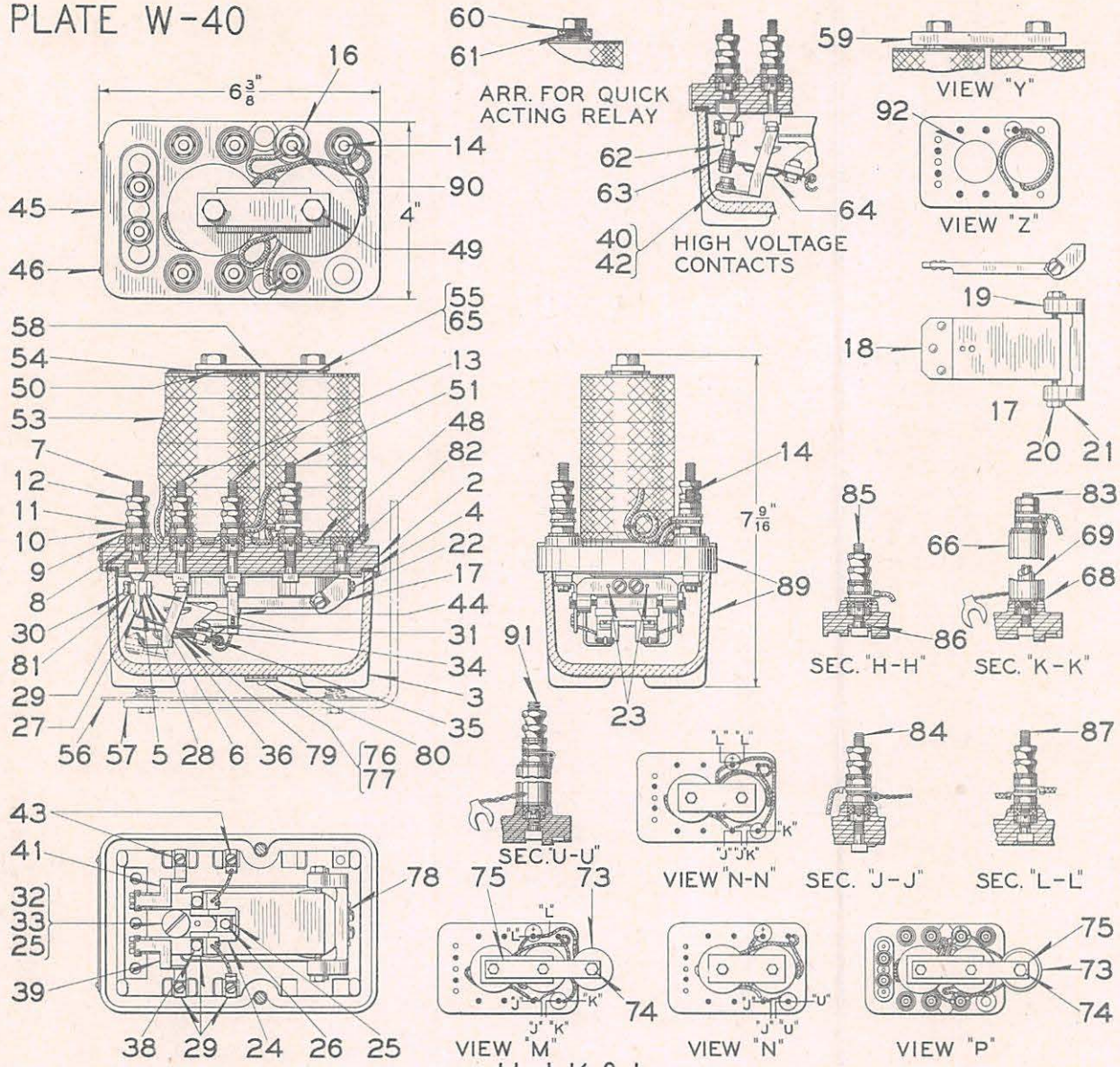

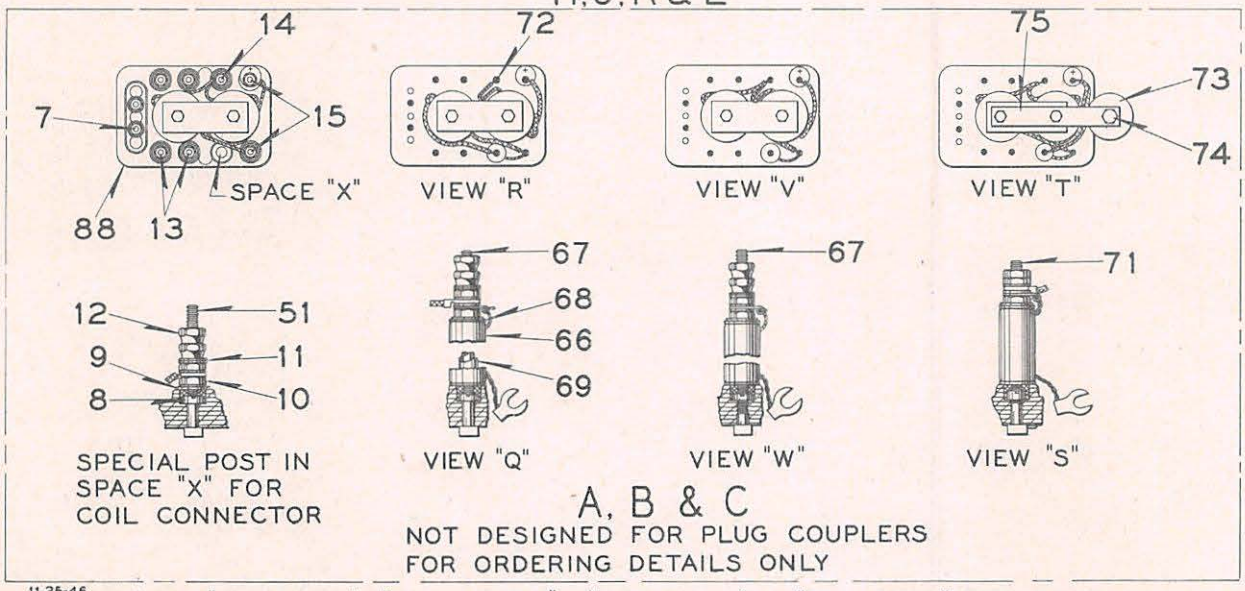

11-25-46
2-2-42

"DN-22", "DN-22A", "DN-22C" & "DN-22L" RELAYS

UNION SWITCH & SIGNAL CO.

CODED TRACK CIRCUIT CONTROL SYSTEM

STYLES "DN-22", "DN-22A", "DN-22C" AND "DN-22L" D.C.NEUTRAL RELAYS

NOTE:- Unless otherwise specified "low voltage" means Silver Spring to Silver Imp.Carbon Post Front and Silver to Silver Back.

If Shock Absorbers Refs.56 or 57 are desired for any of the following Relays, orders should so state.
For Plug Couplers refer to Plate E-5035-2.

Order by Plate, Piece, Reference and Abbreviated Description

STYLE "DN-22C" D.C. NEUTRAL RELAY WITH BACKSTRAP per View "Y" (Original design, not designed for Plug Couplers. All these relays with the exception of Ref.Ak have been superseded by Relays designed for Plug Couplers and orders for complete Relays should refer to Refs.H to Hz).....Dwg. C-9432-9

PIECE	REF.	SUPER-SEDED BY REF.	CONTACT DESCRIPTION	COILS OHMS PER PAIR	RELAY WITHOUT COILS	REMARKS
185127	A	Hx	2F-2B Low Voltage	250	88	
187999	Aa	Hb	2F-2B Low Voltage	4	88	
188770	Ac	He	2F-2B Low Voltage	55	88d	"J" Relay. With One Washer Ref.70 on top of each Coil.
188686	Ad	Hk	2F-2B Low Voltage (Sil.Imp.Carbon front and back posts)	60	88a	"FSA" Relay. With 120-Ohm Resistance Unit Ref.66a per View "W" in Space "X". Top Plate arranged per View "V". With One Washer Ref. 70 on top of each coil.
206943	Ah	Hl	2F-2B Low Voltage (Sil.Imp.Carbon front and back posts)	60	88a	"BSA" Relay. With 200-Ohm Resistance Unit Ref.66d per View "W" in Space "X". Top Plate arranged per View "V" with 2 Washers Ref.70 on top of each coil.
207811	Aj	Hz	2F-2B Low Voltage (Sil.Imp.Carbon front and back posts)	2000	88b	"SA" Relay. With Rectifier Ref.73 and 120-Ohm Resistance Unit Ref.66a per View "S" in Space "X". Top Plate arranged per View "T".
212530	Ak		2F-2B Low Voltage (Sil.Imp.Carbon front and back posts)	100-100	88c	"TM" Relay. With 120-Ohm Resistance Unit Ref.66a per View "Q" in Space "X". Top Plate arranged per View "R".
213999	Am	H	2F-2B Low Voltage	0.74	88	"TRA" Relay.
215187	An	Hc	2F-2B Low Voltage	4	88f	"VMA" Relay. With 6-Ohms Resistance Unit Ref.66e per View "W" in Space "X". Top Plate arranged per View "V".

UNION SWITCH & SIGNAL CO.

STYLE "DN-22A" D.C.NEUTRAL RELAY WITH BACKSTRAP per View "Y" (Original design, not designed for Plug Couplers. All these Relays have been superseded by Relays designed for Plug Couplers and orders for complete Relays should refer to Refs.J to Jm)...Dwg.C-9432-8

REF.	SUPER-SEDED BY REF.	CONTACT DESCRIPTION	COILS OHMS PER PAIR	RELAY WITHOUT COILS	REMARKS
B	Jb	2F-2B Low Voltage	100	88	Slow Release
Ba	Jg	2F-2B Low Voltage	500	88	Slow Release
Bb	Jk	2F-2B Low Voltage	250	88	

STYLE "DN-22" D.C.NEUTRAL RELAY WITH BACKSTRAP AS SHOWN (Original design, not designed for Plug Couplers. All these Relays have been superseded by Relays designed for Plug Couplers and orders for complete Relays should refer to later references)..Dwg.C-9432-3

C	K	2F-2B Low Voltage	60	88	
Ca	Jj	2F-2B Low Voltage (Sil.Imp.Carbon front and back posts)	1000	88e	
Cb	Jg	2F-2B Low Voltage	1000	88	

STYLE "DN-22C" D.C.NEUTRAL RELAY DESIGNED FOR PLUG COUPLERS WITH BACKSTRAP per View "Y".....Dwg. C-9432-17

REF.	CONTACT DESCRIPTION	COILS OHMS PER PAIR	RELAY WITHOUT COILS	REMARKS
H	2F-2B Low Voltage	0.74	89	"TRA" Relay
Ha	2F-2B Low Voltage	3	89o	2 Volt "SA" Relay (Slow Release) Top Plate arranged per View "N-N" with 30-Ohm Resistance Unit Ref.66
Hb	2F-2B Low Voltage	4	89	
Hc	2F-2B Low Voltage	4	89a	"VMA" Relay. Top Plate arranged per View "N" with 6-Ohm Resistance Unit Ref.66e
Hd	2F-2B Low Voltage (Sil.Imp.Carbon front and back posts)	30	89h	"FSA" Relay. Top Plate arranged per View 'N-N' with 30-Ohm Resistance Unit Ref.66 and One Washer Ref.70 on top of each coil.
He	2F-2B Low Voltage	55	89b	"J" Relay. (With One Washer Ref.70 on top of each coil).
Hf	2F-2B Low Voltage (1F-1B Heavy Duty)	55	89g	"J" Relay. (With One Washer Ref.70 on top of each coil).
Hg	2F-2B Low Voltage (Sil.Imp.Carbon front and back posts)	55	89j	"J" Relay. (With One Washer Ref.70 on top of each coil).
Hh	2F-2B Low Voltage	55	89k	Top Plate arranged per View 'N-N' with 250-Ohm Resistance Unit Ref.66g and One Washer Ref.70 on top of each coil.

UNION SWITCH & SIGNAL CO.

STYLE "DN-22C" D.C.NEUTRAL RELAY DESIGNED FOR PLUG COUPLERS WITH BACKSTRAP per View "Y".....Dwg. C-9432-17 (cont'd.)

PIECE	REF.	CONTACT DESCRIPTION	COILS OHMS PER PAIR	RELAY WITHOUT COILS	REMARKS
224082	Hj	2F-2B Low Voltage (Sil.Imp.Carbon front and back posts)	55	89m	Top Plate arranged per View 'N-N' with 250-Ohm Resistance Unit Ref.66g and One Washer Ref.70 on top of each coil.
224078	Hk	2F-2B Low Voltage (Sil.Imp.Carbon front and back posts)	60	89d	"FSA" Relay. Top Plate arranged per View "N" with 120-Ohm Resistance Unit Ref.66a and One Washer Ref.70 on top of each coil.
224079	Hl	2F-2B Low Voltage (Sil.Imp.Carbon front and back posts)	60	89d	"BSA" Relay. Top Plate arranged per View "N" with 200-Ohm Resistance Unit Ref.66d and two Washers Ref.70 on top of each coil.
225736	Hm	2F-2B Low Voltage	60	89	Quick Acting
231376	Hn	2F-2B Low Voltage (Sil.Imp.Carbon front and back posts)	60	89p	"SA" Relay. Top Plate arranged per View "N" with 80-Ohm Resistance Unit Ref.66h. Fast Release.
237024	Ho	2F-2B Low Voltage	60	89q	"SA" Relay. Top Plate arranged per View "N" with 80-Ohm Resistance Unit Ref.66h. Fast Release.
231375	Hp	2F-2B Low Voltage (Heavy Duty front and back contacts)	70	89r	10 Volt "SA" Relay. Top Plate arranged per View "N-N" with 750-Ohm Resistance Unit Ref.66f. Slow Release.
223422	Hq	2F-2B Low Voltage	100	89f	"VM" or "AP" Relay. Top Plate arranged per View 'N-N' with 750-Ohm Resistance Unit Ref.66f. Slow Release.
224085	Hr	2F-2B Low Voltage	100	89s	"VM" or "AP" Relay. Slow Release.
225389	Hs	2F-2B Low Voltage (Sil.Imp.Carbon front and back posts)	100	89n	"VM" or "AP" Relay. Top Plate arranged per View 'N-N' with 750-Ohm Resistance Unit Ref.66f. Slow Release.
231084	Ht	2F-2B Low Voltage (Heavy Duty front and back posts)	100	89r	12 Volt "SA" Relay. Top Plate arranged per View "N-N" with 750-Ohms Resistance Unit Ref.66f. Slow Release.
261633	Hu	2F-2B L.V. (1F-1B Sil.Imp.Carbon front and back posts.1F-1B Heavy Duty Posts)	200	89t	One Washer Ref.70 on top of each coil. Decoding Relay
261634	Hv	2F-2B Low Voltage (Heavy Duty front and back posts)	200	89u	One Washer Ref.70 on top of each coil. Decoding Relay.
261635	Hw	2F-2B Low Voltage (Sil.Imp. Carbon front and back posts)	200	89j	One Washer Ref.70 on top of each coil. Decoding Relay.

UNION SWITCH & SIGNAL CO.

PIECE	REF.	CONTACT DESCRIPTION	COILS OHMS PER PAIR	RELAY WITHOUT COILS	REMARKS
STYLE "DN-22C" D.C.NEUTRAL RELAY DESIGNED FOR PLUG COUPLERS WITH BACKSTRAP per View "Y".....Dwg. C-9432-17 (cont'd.)					
224076	Hx	2F-2B Low Voltage	250	89	
239953	Hy	2F-2B Low Voltage	250	89b	One Washer Ref.70 on top of each coil.
224083	Hz	2F-2B Low Voltage (Sil.Imp.Carbon front and back posts)	2000	89e	"SA" Code Detector Relay for Back Contact Coding. Top Plate arranged per View "M" with Rectifier Ref.73 and 120-Ohm Resistance Unit Ref.66a
STYLE "DN-22A" D.C.NEUTRAL RELAY DESIGNED FOR PLUG COUPLERS WITH BACKSTRAP per View "Y".....Dwg.C-9432-25 and 25A					
224123	J	2F-2B Low Voltage	60	89	
224126	Ja	2F-2B Low Voltage	100	89	
224387	Jb	2F-2B Low Voltage	100	89	Slow Release
224129	Jc	2F-2B Low Voltage	250	89	
224388	Jd	2F-2B Low Voltage	250	89	Slow Release
245359	Je	2F-2B Low Voltage (Sil.Imp.Carbon front and back posts)	250	89v	Special Slow Release. Slow release coil on rear core and ferrule Ref.92 on front core. Top Plate arranged per View "Z"
255968	Jf	2F-2B Low Voltage (Heavy Duty back contacts)	250	89w	Special Slow Release. Slow release coil on rear core and ferrule Ref.92 on front core. Top Plate arranged per View "Z"
224390	Jg	2F-2B Low Voltage	500	89	Slow Release
224890	Jh	2F-2B Low Voltage	1000	89	
256958	Jj	2F-2B Low Voltage (Sil.Imp.Carbon front and back posts)	1000	89c	
224392	Jk	2F-2B Low Voltage	1500	89	Slow Release
234820	Jl	2F-1B Low Voltage Independent	1500	89x	Slow Release
224382	Jm	2F-2B Low Voltage	2000	89	
STYLE "DN-22" D.C.NEUTRAL RELAY DESIGNED FOR PLUG COUPLERS WITH BACKSTRAP AS SHOWN.....Dwg. C-9432-24					
224095	K	2F-2B Low Voltage	60	89	
224096	Ka	2F-2B Low Voltage (Sil.Imp.Carbon front and back posts)	60	89c	

UNION SWITCH & SIGNAL CO.

STYLE "DN-22L" LIGHTOUT RELAY DESIGNED FOR PLUG COUPLERS WITH BACKSTRAP per View "Y".....Dwg. C-9432-22

PIECE	REF.	CONTACT DESCRIPTION	COILS OHMS PER PAIR	RELAY WITHOUT COILS	REMARKS
223430	L	2F-2B Low Voltage	0.185	89	Top Plate arranged per View "P" with Rectifier Ref.73a
224396	La	2F-2B Low Voltage	0.08	89	Top Plate arranged per View "P" with Rectifier Ref.73a

PIECE	REF.	DESCRIPTION	DWG.REF.
184904	2	TOP PLATE, without Cores	C-9433-1
184908	3	CASE	8163-215
184893	4	GASKET	8078-729
131245	5	FRONT TERMINAL POST (Contact Holder)	8094-2122
134400	6	SHEET METAL LOCK WASHER	8486-371
	7	TERMINAL POST COMPLETE WITH NUTS AND WASHERS (Inc.1-7a, 1-8, 1-9, 1-10, 2-11 and 2-12)	12451-
115706	7a	TERMINAL POST ONLY, for Ref.7	8094-1192
72948	8	NUT	8109-383
69705	9	WASHER	7828-287
29103	10	NUT	8109-194
29102	11	WASHER	7828-139
29101	12	NUT	8109-193
	13	TERMINAL POST COMPLETE WITH NUTS AND WASHERS (Inc.1-13a, 1-8, 1-9, 1-10, 2-11 and 2-12)	12451-
131234	13a	TERMINAL POST ONLY, for Ref.13	8094-2125
	14	TERMINAL POST COMPLETE WITH NUTS AND WASHERS (Inc.1-14a, 1-8, 1-9, 3-10 and 2-11)	12451-
199852	14a	TERMINAL POST ONLY, for Ref.14	8094-1192
	15	TERMINAL POST COMPLETE WITH NUTS AND WASHERS (Inc.1-15a, 1-8, 1-9, 2-10, 3-11 and 2-12)	12451-
113978	15a	TERMINAL POST ONLY, for Refs.15 and 87	8094-1192
142777	16	TAG (Marked +)	8988-75
185123	17	ARMATURE AND BRACKET COMPLETE (Inc.1-18, 1-19, 2-20 and 2-21)	C-9433-2
213040	17a	ARMATURE AND BRACKET COMPLETE (Inc.1-18a, 1-19, 2-20 and 2-21)	C-9433-2
236172	17b	ARMATURE AND BRACKET COMPLETE (Inc.1-18b, 1-19, 2-20 and 2-21)	C-9433-2
184891	18	ARMATURE ONLY, for Ref.17	8157-415

UNION SWITCH & SIGNAL CO.

PIECE	REF.	DESCRIPTION	DWG. REF.
180557	18a	ARMATURE ONLY, for Ref.17a	8157-415
236173	18b	ARMATURE ONLY, for Ref.17b	8157-415
183695	19	BRACKET for Refs.17, 17a and 17b	8303-128
159814	20	PIVOT SCREW for Refs.17, 17a and 17b	8378-354
159815	21	LOCK WASHER for Refs.17, 17a and 17b	8486-395
	22	MACHINE SCREW, Ref.22a with Washer Ref.78 and Lock Washer Ref.22b	
195913	22a	MACHINE SCREW ONLY for Ref.22	8098-1300
259269	22b	LOCK WASHER	8486-432
57497	23	DOWEL PIN	8097-872
150113	24	CONTACT SPRING SUPPORT (2-Way)	9968-849
170966	24a	CONTACT SPRING SUPPORT (3-Way)	9968-1014
149339	25	SHEET METAL LOCK WASHER (for 2-Way Support and Back Stop Screw)	8486-368
178251	25a	SHEET METAL LOCK WASHER (for 3-Way Support)	8486-405
142673	26	SCREW	8098-1300
158043	27	CONTACT TIP (Silver Imp.Carbon)	8341-476
106290	27a	CONTACT TIP (Silver Imp.Carbon) Heavy Duty Contact	8341-242
173737	28	SHEET METAL LOCK WASHER	8486-403
134516	29	SHEET METAL LOCK WASHER for Back Posts, Front Contact Tips, Connectors, 2-Way Contact Spring Support and Outside Springs on 3-Way Contact Spring Support	8486-368
171092	29a	SHEET METAL LOCK WASHER for Middle Spring on 3-Way Contact Spring Support	8486-405
57996	30	SCREW	8098-845
151836	31	NUT	8109-445
184898	32	BACK STOP SCREW	8098-549
1506	33	NUT for Ref.32	8109-12
150268	34	FRONT CONTACT SPRING COMPLETE (Without Connector)	8385-2336
189835	34b	FRONT CONTACT SPRING COMPLETE (Without Connector)	8385-2336
223873	34c	FRONT CONTACT SPRING COMPLETE (Without Connector) Heavy Duty Contact	8385-2615
184902	35	WASHER (Between contact springs)	7828-379
	36	BACK CONTACT SPRING COMPLETE (With flexible connector)	8385-2376
184901	36a	BACK CONTACT SPRING COMPLETE (Without connector)	8385-2376

UNION SWITCH & SIGNAL CO.

PIECE	REF.	DESCRIPTION	DWG. REF.
223980	36b	BACK CONTACT SPRING COMPLETE (Without connector) Heavy Duty Contact	8385-2376
234980	36c	BACK CONTACT SPRING COMPLETE (Without connector)	8385-2376
150140	37	LOCK WASHER for contact springs (Used in place of Ref.79 previous to 9-7-39; also for Ref.89x. Not shown)	8486-367
150166	38	SCREW	8098-550
185134	39	L.H. BACK POST COMPLETE (L.V.) with Silver Tip	8094-2334
189079	39a	L.H. BACK POST COMPLETE (L.V.) (With Silver Imp.Carbon Tip) (As shown in dot and dash lines)	8094-981
187079	39b	L.H. BACK POST COMPLETE (L.V.) with Silver Tip	8094-2342
106758	39c	L.H. BACK POST COMPLETE (L.V.) with Sil.Imp.Carbon Tip	8094-2396
223969	39d	L.H. BACK POST COMPLETE (L.V.) with Silver Tip. Heavy Duty Contact	8094-2429
186906	40	R.H. BACK POST COMPLETE (H.V.)	8094-2338
185135	41	R.H. BACK POST COMPLETE (L.V.) with Silver Tip	8094-2334
189080	41a	R.H. BACK POST COMPLETE (L.V.) (With Silver Imp.Carbon Tip) (As shown in dot and dash lines)	8094-981
187078	41b	R.H. BACK POST COMPLETE (L.V.) with Silver Tip	8094-2342
106757	41c	R.H. BACK POST COMPLETE (L.V.) with Sil.Imp.Carbon Tip	8094-2396
230395	41d	R.H. BACK POST COMPLETE (L.V.) with Sil.Tip (Heavy Duty)	8094-2429
187058	41e	R.H. BACK POST COMPLETE (L.V.) with Sil.Tip	8094-2340
186905	42	L.H. BACK POST COMPLETE (H.V.)	8094-2338
62977	43	SCREW	8098-845
184900	44	CONNECTOR with Flexible Connector	8244-151
184899	44a	CONNECTOR (without Flexible Connector)	8244-151
169336	44b	FLEXIBLE CONNECTOR ONLY	10934-87
196531	44c	CONNECTOR WITH FLEXIBLE CONNECTOR (Used with Heavy Duty Contacts)	8244-151
194343	44d	CONNECTOR WITH FLEXIBLE CONNECTOR for use with L.V.Independent Back Contact	8244-155
184892	45	NAME PLATE	8225-455
193864	45a	NAME PLATE for Ref.89x	8225-478
	46	SCREW, NO.4 x 1/4 in. Rd.Hd.Self Tapping (Tin Pl.)	
184896	47	U-BOLT with Washers and Nuts (Used previous to 10-7-35) Not shown	8782-196
44618	47a	WASHER for Refs.47 and 76	7828-184

UNION SWITCH & SIGNAL CO.

PIECE	REF.	DESCRIPTION	DWG. REF.
190681	47b	NUT for Refs.47 and 76	8109-383
168826	48	COIL SPACING WASHER	8078-1499
	49	CAP SCREW, 5/16 in.-18 x 3/4 in. Hex.Hd.S. (Cad.Pl.)	
184909	50	COIL LOCK	8735-784
	51	TERMINAL POST COMPLETE with Nuts and Washers (Inc.1-51a, 1-8, 1-9, 2-10, 4-11 and 2-12)	12451-
118271	51a	TERMINAL POST ONLY, for Refs.51 and 84	8094-1192
142777	52	TAG (Orders should specify marking desired)	8988-75
138111	53	MAGNET COIL (125-Ohms) for Refs.Hx, Hy, Jc	8133-339
184897	53a	MAGNET COIL (2-Ohms) for Refs.Aa, An, Hb and Hc	8133-452
189122	53c	MAGNET COIL (27.5-Ohms) for Refs.Ac, He, Hf, Hg, Hh, and Hj	8133-452
159678	53d	MAGNET COIL (30-Ohms) for Refs.Ad, Ah, Hk, Hl, Hm, Hn, Ho, J, K and Ka	8133-339
147953	53e	MAGNET COIL (1000-Ohms) for Refs.Aj, Hz and Jm	8133-339
212578	53f	MAGNET COIL (100-Ohms) for Refs.Ak, Hu, Hv and Hw	8133-452
196624	53g	MAGNET COIL (0.37-Ohm) for Refs.Am, H and L	8133-452
157893	53h	MAGNET COIL (50-Ohms) for Refs.B and Jb	8133-388
157896	53j	MAGNET COIL (250-Ohms) for Refs.Ba, Je, Jf and Jg	8133-388
143067	53k	MAGNET COIL (500-Ohms) for Refs.Ca, Cb, Jh and Jj	8133-339
156669	53m	MAGNET COIL (50-Ohms) for Refs.Hq, Hr, Hs and Ht	8133-352
214563	53n	MAGNET COIL (15-Ohms) for Ref.Hd	8133-452
172632	53p	MAGNET COIL (750-Ohms) for Refs.Jk and Jl	8133-388
169440	53q	MAGNET COIL (1.5-Ohms) for Ref.Ha	8133-388
177100	53r	MAGNET COIL (35-Ohms) for Ref.Hp	8133-388
153693	53s	MAGNET COIL (50-Ohms) for Ref.Ja	8133-452
157894	53t	MAGNET COIL (125-Ohms) for Ref.Jd	8133-388
206446	53u	MAGNET COIL (0.16-Ohm) for Ref.La	8133-452
184906	54	FRONT MAGNET CORE	8101-365
184907	55	REAR MAGNET CORE	8101-365
185129	56	SHELF TYPE SHOCK ABSORBER BASE COMPLETE for Styles "DN-22", "DN-22A", "DN-22C" and "DN-22L" Relays	12404-50
185131	57	WALL TYPE SHOCK ABSORBER BASE COMPLETE for Styles "DN-22", "DN-22A" and "DN-22C" Relays without Rectifier	12404-28

UNION SWITCH & SIGNAL CO.

PIECE	REF.	DESCRIPTION	DWG. REF.
196403	57a	WALL TYPE SHOCK ABSORBER BASE COMPLETE for Styles "DN-22", "DN-22A", "DN-22C" and "DN-22L" Relays with Rectifier	12404-28
184894	58	BACKSTRAP	8162-253
184895	59	BACKSTRAP	8162-253
145747	60	WASHER for use with Back Strap Refs.58 and 59	7828-218
188132	61	BUSHING for use with Back Strap Ref.58	8161-144
25107	61a	BUSHING for use with Back Strap Ref.59	C-7459-2
168308	62	CONTACT TIP (Silver Imp.Carbon) H.V.	8341-485
180978	63	CONTACT SPRING with Silver Imp.Carbon Tip (with Flexible Connector) (H.V. Front and Back)	8385-2098
180977	63a	CONTACT SPRING with Silver Imp.Carbon Tip (without Connector) (H.V. Front and Back)	8385-2098
180980	63b	FRONT SPRING ONLY (H.V.) with Silver Imp.Carbon Tip (with Flexible Connector)	8385-2099
180979	63c	FRONT SPRING ONLY (H.V.) with Silver Imp.Carbon Tip (without Connector)	8385-2099
180975	64	STOP SPRING	8735-769
104169	65	NUT for Magnet Cores	8265-359
191572	66	RESISTANCE UNIT (30-Ohms) (1-7/8 in. long)	9065-249
189505	66a	RESISTANCE UNIT (120-Ohms) (1-1/2 in. long)	9065-249
191670	66b	RESISTANCE UNIT (135-Ohms) (1-1/2 in. long)	9065-249
191668	66c	RESISTANCE UNIT (900-Ohms) (1-1/2 in. long)	9065-249
207884	66d	RESISTANCE UNIT (200-Ohms) (1-1/2 in. long)	9065-249
215255	66e	RESISTANCE UNIT (6-Ohms) (1-1/2 in. long)	9065-249
219079	66f	RESISTANCE UNIT (750-Ohms) (1-1/2 in. long)	9065-249
221807	66g	RESISTANCE UNIT (250-Ohms) (1-1/2 in. long)	9065-249
231425	66h	RESISTANCE UNIT (80-Ohms) (1-1/2 in. long)	9065-249
	67	TERMINAL POST COMPLETE with Nuts, Washers and Bushing for use with Resistors 1-1/2 in. long (Inc.1-67b, 1-8, 1-9, 2-10, 4-11, 2-12, 2-68 and 1-69)	12451-
	67a	TERMINAL POST COMPLETE with Nuts, Washers and Bushing for use with Resistors 1-7/8 in. long (Inc.1-67c, 1-8, 1-9, 2-10, 4-11, 2-12, 2-68 and 1-69)	12451-
189070	67b	TERMINAL POST ONLY, 3-7/8 in. long, for Ref.67	8094-1192
189076	67c	TERMINAL POST ONLY, 4-1/4 in. long, for Ref.67a	8094-1192
78530	68	WASHER	8078-1092

UNION SWITCH & SIGNAL CO.

PIECE	REF.	DESCRIPTION	DWG. REF.
185961	69	BUSHING, 1-7/16 in. long	8095-678
180795	70	WASHER (Not Shown) Used under Coil Lock when required	7828-176
	71	TERMINAL POST WITH NUTS AND WASHERS (Inc.1-71a, 3-10, 2-11, 1-9, 2-68, 1-69 and 1-8)	12451-
210080	71a	TERMINAL POST ONLY, 3-5/16 in. long, for Ref.71	8094-2207
	72	TERMINAL POST WITH NUTS AND WASHERS (Inc.1-15a, 2-12, 3-11, 2-10, 1-8 and 1-9)	12451-
102413	73	RECTIFIER (Style RE-3D)	12558-40
196623	73a	RECTIFIER (Style RE-8)	12558-31
141603	74	NUT	8265-253
196409	75	STRAP	12538-154
	76	CLAMP STUD WITH NUTS AND WASHERS (Inc.1-76a, 1-47a, 1-47b and 1-77)	8114-889
195626	76a	CLAMP STUD ONLY	8114-889
56349	77	WASHER	7826-180
260688	78	WASHER	7828-265
156580	79	STOP SPRING	8385-2191
195622	80	CLAMP PLATE	9999-1175
20686	81	WASHER	7828-108
239949	82	DUMMY PLUG	8078-732
	83	TERMINAL POST WITH NUTS, WASHERS AND BUSHING for use with Resistance Units 1-1/2 in. long (Inc.1-83b, 1-8, 1-9, 3-10, 2-11, 2-68 and 1-69)	12451-
	83a	TERMINAL POST WITH NUTS, WASHERS AND BUSHING for use with Resistance Units 1-7/8 in. long (Inc.1-83c, 1-8, 1-9, 3-10, 2-11, 2-68 and 1-69)	12451-
157456	83b	TERMINAL POST ONLY, 3 in. long	8094-2207
150920	83c	TERMINAL POST ONLY, 3-3/8 in. long	8094-2207
	84	TERMINAL POST WITH NUTS AND WASHERS (Inc.1-51a, 1-8, 1-9, 2-10, 4-11 and 2-12)	12451-
	85	TERMINAL POST WITH NUTS AND WASHERS (Inc.1-7a, 1-8, 1-9, 1-10, 3-11, 2-12 and 1-86)	12451-
188259	86	LOCK WASHER	8486-310
	87	TERMINAL POST WITH NUTS AND WASHERS (Inc.1-15a, 1-8, 1-9, 2-10, 5-11 and 2-12)	12451-

UNION SWITCH & SIGNAL CO.

RELAY COMPLETE without Coils, Resistance Unit, Rectifier and Backstrap (Not designed for Plug Couplers).....Dwg. C-9432-2

PIECE	REF.	CONTACT DESCRIPTION	CONTACT SPRING COMPLETE		BACK POST COMPLETE		ARMATURE ASSEMBLY
			FRONT	BACK	LEFT HAND	RIGHT HAND	
185125	88	2F-2B Low Voltage	34	36a	39	41	17
189061	88a	2F-2B Low Voltage Sil.Imp.Carbon front and back posts. Top Plate arranged per View "V"	34	36a	39a	41a	17
208829	88b	2F-2B Low Voltage Sil.Imp.Carbon front and back posts. Top Plate arranged per View "T"	34	36a	39a	41a	17
212607	88c	2F-2B Low Voltage Sil.Imp.Carbon front and back posts. Top Plate arranged per View "R"	34	36a	39a	41a	17
212927	88d	2F-2B Low Voltage	34b	36a	39	41	17a
213012	88e	2F-2B Low Voltage Sil.Imp.Carbon front and back posts.	34	36a	39a	41a	17
215252	88f	2F-2B Low Voltage Top Plate arranged per View "V"	34	36a	39	41	17

RELAY COMPLETE without Coils, Resistance Unit, Rectifier and Backstrap (Designed for Plug Couplers).....Dwg. C-9432-16

PIECE	REF.	CONTACT DESCRIPTION	CONTACT SPRING COMPLETE		BACK POST COMPLETE		ARMATURE ASSEMBLY
			FRONT	BACK	LEFT HAND	RIGHT HAND	
222648	89	2F-2B Low Voltage Top Plate arranged as shown	34	36a	39	41	17
223420	89a	2F-2B Low Voltage Top Plate arranged per View "N"	34	36a	39	41	17b
223424	89b	2F-2B Low Voltage Top Plate arranged as shown	34b	36a	39	41	17a
224064	89c	2F-2B Low Voltage (Sil.Imp.Carbon front and back posts). Top Plate arranged as shown	34	36a	39a	41a	17

UNION SWITCH & SIGNAL CO.

RELAY COMPLETE without Coils, Resistance Unit, Rectifier and Backstrap (Designed for Plug Couplers).....Dwg. C-9432-16 (cont'd.)

PIECE	REF.	CONTACT DESCRIPTION	CONTACT SPRING COMPLETE		BACK POST COMPLETE		ARMATURE ASSEMBLY
			FRONT	BACK	LEFT HAND	RIGHT HAND	
224066	89d	2F-2B Low Voltage (Sil.Imp.Carbon front and back posts). Top Plate arranged per View "N"	34	36a	39a	41a	17
224071	89e	2F-2B Low Voltage (Sil.Imp.Carbon front and back posts). Top Plate arranged per View "M"	34	36a	39a	41a	17
225737	89f	2F-2B Low Voltage	34	36a	39	41	17b
223866	89g	2F-2B Low Voltage (1F-1B Heavy Duty)	34b (R.H.) 34c (L.H.)	36a (R.H.) 36b (L.H.)	39d	41	17a
224086	89h	2F-2B Low Voltage (Sil.Imp.Carbon front and back posts). Top Plate arranged per View "NN"	34b	36a	39a	41a	17a
224068	89j	2F-2B Low Voltage (Sil.Imp.Carbon front and back posts)	34b	36a	39a	41a	17a
224069	89k	2F-2B Low Voltage Top Plate arranged per View "NN"	34b	36a	39	41	17a
224070	89m	2F-2B Low Voltage (Sil.Imp.Carbon front and back posts). Top Plate arranged per View "NN"	34b	36a	39a	41a	17a
228342	89n	2F-2B Low Voltage (Sil.Imp.Carbon front and back posts). Top Plate arranged per View "NN"	34	36a	39a	41a	17b
231407	89o	2F-2B Low Voltage Top Plate arranged per View "NN"	34c	36b	39d	41d	17a
224066	89p	2F-2B Low Voltage Sil.Imp.Carbon front and back posts. Top Plate arranged per View "N"	34	36a	39a	41a	17
237025	89q	2F-2B Low Voltage Top Plate arranged per View "N"	34	36a	39	41	17

UNION SWITCH & SIGNAL CO.

RELAY COMPLETE without Coils, Resistance Unit, Rectifier and Backstrap (Designed for Plug Couplers).....Dwg. C-9432-16 (cont'd.)

PIECE	REF.	CONTACT DESCRIPTION	CONTACT SPRING COMPLETE FRONT	CONTACT SPRING COMPLETE BACK	BACK POST COMPLETE LEFT HAND	BACK POST COMPLETE RIGHT HAND	ARMATURE ASSEMBLY
231406	89r	2F-2B Low Voltage (Heavy Duty front and back contacts). Top Plate arranged per View "N-N"	34c	36b	39d	41d	17a
236431	89s	2F-2B Low Voltage Top Plate arranged as shown	34	36a	39	41	17b
263711	89t	2F-2B Low Voltage (1F-1B Sil.Imp.Carbon front and back posts, 1F-1B Heavy Duty Contacts). Top Plate arranged as shown	34b (R.H.) 34c (L.H.)	36a (R.H.) 36b (L.H.)	39d	41a	17a
263726	89u	2F-2B Low Voltage (Heavy Duty front and back posts). Top Plate arranged as shown	34c	36b	39d	41d	17a
245358	89v	2F-2B L.V. (Sil.Imp. Carbon front and back posts). Top Plate arranged per View "Z"	34	36a	39a	41a	17
224072	89w	2F-2B Low Voltage (2F Standard and 2B Heavy Duty). Top Plate arranged per View "Z"	34	36b	39d	41d	17
224033	89x	2F-1B Low Voltage Independent	34	36c	--	41e	17

PIECE	REF.	DESCRIPTION	DWG.REF.
	90	TERMINAL POST COMPLETE with Nuts and Washers (Inc.1-15a, 1-8, 1-9, 2-10, 4-11 and 2-12).....	12451-
	91	TERMINAL POST COMPLETE with Nuts, Washers and Bushing (Inc. 1-91b, 1-9, 2-10, 4-11, 2-12, 2-68 and 1-69) for use with Resistance Unit 1-1/2 in.long.....	12451-
	91a	TERMINAL POST COMPLETE with Nuts, Washers and Bushing (Inc. 1-91c, 1-9, 2-10, 4-11, 2-12, 2-68 and 1-69) for use with Resistance Unit 1-7/8 in.long.....	12451-
226412	91b	TERMINAL POST ONLY, 3-5/8 in. long.....	8094-2207
226413	91c	TERMINAL POST ONLY, 4 in. long.....	8094-2207
220441	92	COPPER FERRULE.....	8350-785

PLATE W-42A

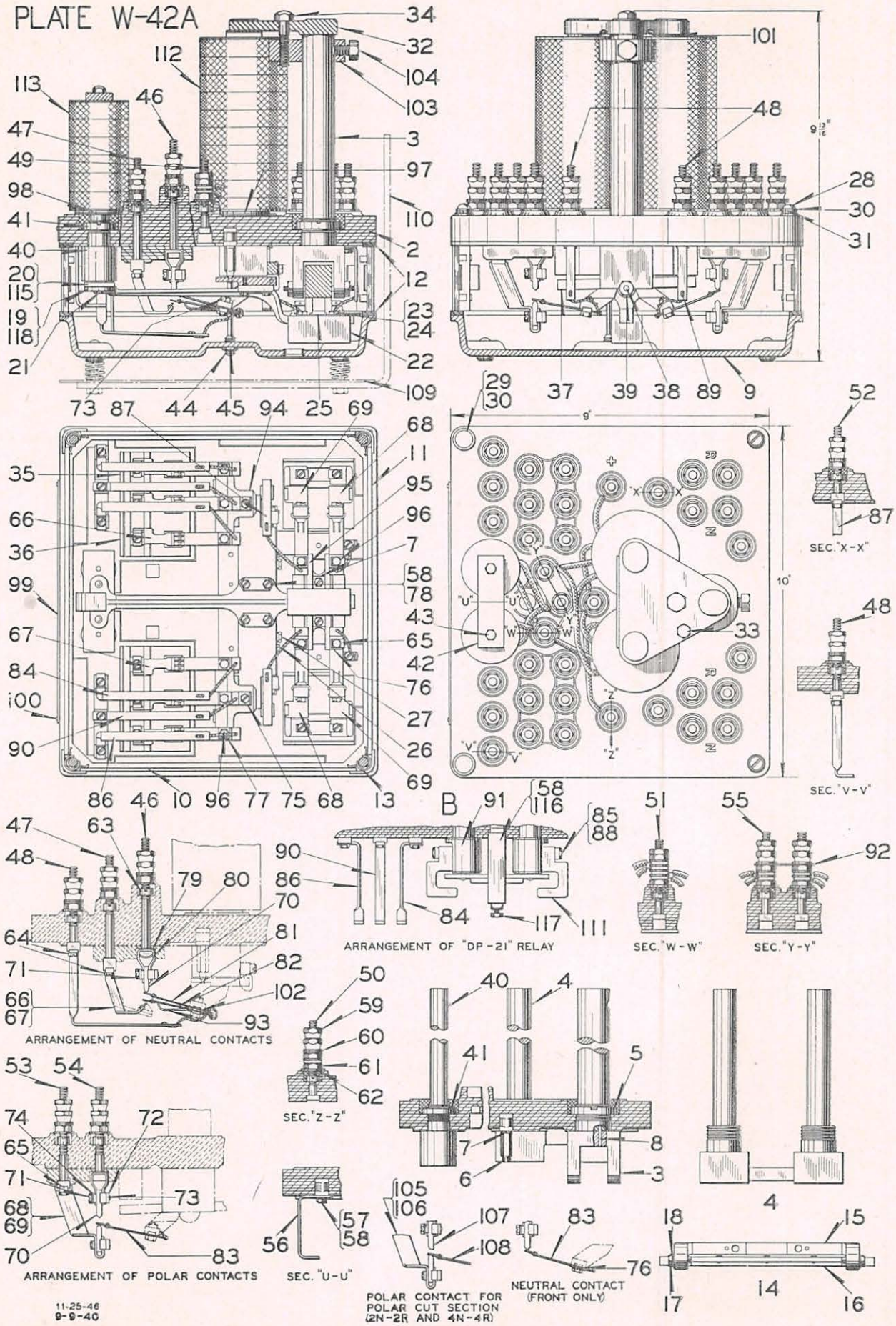

"DP-20" & "DP-21" RELAYS (6 POINT)

UNION SWITCH & SIGNAL CO.

SIX POINT STYLES "DP-20" AND "DP-21" RETAINED NEUTRAL POLARIZED RELAYS

Order by Plate, Piece, Reference and Abbreviated Description

PIECE	REF.	DESCRIPTION	DWG. REF.
181442	B	STYLE "DP-20" RETAINED NEUTRAL ARMATURE POLARIZED RELAY with six front and six back low voltage neutral contacts (Silver Imp.Carbon front posts and Silver back posts) and four normal and four reverse polarized contacts. Main Coils 670-Ohms per pair and Auxiliary Coils 270-Ohms per pair	C-9407-3
188759	Ba	STYLE "DP-21" RETAINED NEUTRAL ARMATURE POLARIZED RELAY with six front and six back low voltage neutral contacts (Silver Imp.Carbon front post and Silver back post) and four normal and four reverse polarized contacts. Main Coils 400-Ohms per pair and Auxiliary Coils 270-Ohms per pair	C-9407-9
213234	Bb	STYLE "DP-21" RETAINED NEUTRAL ARMATURE POLARIZED RELAY with six front and six back low voltage neutral contacts (Silver Imp.Carbon front and back posts) and four normal and four reverse polarized contacts. Main Coils 670-Ohms per pair and Auxiliary Coils 270-Ohms per pair	C-9407-9
181101	2	TOP PLATE without Cores	C-9406-2
	3	PERMANENT MAGNET CORE COMPLETE (Magnetized and wrapped in corrugated paper for shipping)	8101-355
182613	4	PAIR OF MAIN CORES (Cores should be ordered in pairs so they can be ground to the same dimensions at our factory)	C-9271-8
104169	5	NUT	8265-359
181817	6	CORE PIN	8114-826
149339	7	LOCK WASHER	8486-368
37789	8	PIN	8097-279
181142	9	BASE WITH GLASS SHIELDS, GASKET AND SHIELD SUPPORTS (Inc. 1-9a, 2-10, 2-11, 1-12 and 4-13)	C-9406-3
181141	9a	BASE ONLY, for Ref.9	C-9406-3
181152	10	GLASS SHIELD (Sides)	8163-309
181153	11	GLASS SHIELD (Front and Back)	8163-309
181155	12	GASKET	8078-1553
181150	13	SHIELD SUPPORT	10932-33

UNION SWITCH & SIGNAL CO.

PIECE	REF.	DESCRIPTION	DWG. REF.
181278	14	ARMATURE WITH BRACKET, PIVOT SCREWS AND LOCK WASHERS (Inc.1-15, 1-16, 2-17 and 2-18)	C-9406-4
	14a	ARMATURE WITH BRACKET, PIVOT SCREWS, LOCK WASHERS AND PINS (Inc.1-14 and 2-26)	C-9406-
157243	15	BRACKET	8303-107
181178	16	ARMATURE	8157-400
164165	17	PIVOT SCREW	8378-356
159815	18	LOCK WASHER	8486-395
184534	19	AUXILIARY ARMATURE ARM AND COUNTERWEIGHT SUPPORT COMPLETE (Inc.1-19a, 1-20, 2-21, 1-22, 2-23, 2-24, 1-25) for "DP-20" Relay	C-9406-1
181046	19a	AUXILIARY ARMATURE ARM AND COUNTERWEIGHT SUPPORT ONLY	C-9406-1
184336	20	ARMATURE for Ref.19	8157-401
54933	21	RIVET	10301-30
232779	22	COUNTERWEIGHT	9672-214
53428	23	SCREW	8098-995
1506	24	NUT	8109-12
45338	25	NUT LOCK	8486-155
57497	26	PIN (Dowel)	8097-872
	27	SCREW, Ref.27a with Lock Washer Ref.27b	
195913	27a	SCREW ONLY	8098-1300
185878	27b	LOCK WASHER	8486-405
59371	28	SCREW	8098-1172
59306	29	SCREW	8098-1172
73493	30	WASHER	7826-78
176217	31	WASHER	8078-1407
194251	32	BACK STRAP	8162-262
137935	33	PLUG	8098-1289
	34	CAP SCREW, 5/16 in.-18 x 1-1/4 in. Hex.Hd.S. (Cad.Pl.)	
161270	35	INSULATION BLOCK for one contact	8750-2348
157218	36	INSULATION BLOCK for two contacts	8750-2348
181448	37	POLAR ARMATURE WITH CORE PINS AND BUSHINGS. For 4N-4R Polar Contacts	8157-374

UNION SWITCH & SIGNAL CO.

PIECE	REF.	DESCRIPTION	DWG. REF.
163325	37a	POLAR ARMATURE WITH CORE PINS AND BUSHINGS. (For Track Relays with Polar Contacts for Polar Cut Section) For 4N-4R Polar Contacts	8157-374
157854	38	TRUNNION SCREW	8378-353
26545	39	NUT	8109-181
181182	40	AUXILIARY CORE for "DP-20" Relay	8101-357
181219	41	NUT	8109-465
181184	42	AUXILIARY BACK STRAP	8162-249
45931	43	SCREW	8098-390
	44	SCREW with Nut Ref.45	12471-
142642	44a	SCREW ONLY, for Ref.44	8098-1298
537	45	NUT	8109-1
	46	TERMINAL POST WITH NUTS AND WASHERS (Inc.1-46a, 2-59, 2-60, 1-61, 1-62 and 1-63)	12451-
157862	46a	TERMINAL POST ONLY, for Ref.46	8094-2207
	47	TERMINAL POST WITH NUTS, WASHERS AND LOCK WASHER (Inc.1-47a, 2-59, 2-60, 1-61, 1-62, 1-63, 1-64 and 1-65)	12451-
181217	47a	TERMINAL POST ONLY, for Ref.47	8094-2125
	48	TERMINAL POST WITH NUTS, WASHERS AND LOCK WASHER (Inc. 1-48a, 2-59, 2-60, 1-61, 1-62, 1-63, 1-64 and 1-65)	12451-
131234	48a	TERMINAL POST ONLY, for Ref.48	8094-2125
	49	TERMINAL POST WITH NUTS AND WASHERS (Inc.1-49a, 2-60, 3-61, 1-62 and 1-63)	12451-
115706	49a	TERMINAL POST ONLY, for Ref.49	8094-1192
	50	TERMINAL POST WITH NUTS AND WASHERS (Inc.1-50a, 2-59, 3-60, 2-61, 1-62 and 1-63)	12451-
130200	50a	TERMINAL POST ONLY, for Refs.50 and 51	8094-1192
	51	TERMINAL POST WITH NUTS AND WASHERS (Inc.1-50a, 4-60, 3-61, 1-62 and 1-63)	12451-
	52	TERMINAL POST WITH NUTS, WASHERS AND LOCK WASHER (Inc. 1-52a, 2-59, 2-60, 1-61, 1-62, 1-63, 1-64 and 1-65)	12451-
158035	52a	TERMINAL POST ONLY, for Ref.52	8094-2125
	53	TERMINAL POST WITH NUTS, WASHERS AND LOCK WASHER (Inc. 1-53a, 2-59, 2-60, 1-61, 1-62, 1-63, 1-64 and 1-65)	12451-
157858	53a	TERMINAL POST ONLY, for Ref.53	8094-2235
	54	TERMINAL POST WITH NUTS AND WASHERS (Inc. 1-54a, 2-59, 2-60, 1-61, 1-62 and 1-63)	12451-

UNION SWITCH & SIGNAL CO.

PIECE	REF.	DESCRIPTION	DWG. REF.
112417	54a	TERMINAL POST ONLY, for Refs.54 and 55	8094-1192
	55	TERMINAL POST WITH NUTS AND WASHERS (Inc.1-54a, 2-59, 3-60, 2-61, 1-62 and 1-63)	12451-
181188	56	AUXILIARY BACKSTOP	8303-119
164005	57	LOCK WASHER used for Ref.58	8486-368
142673	58	SCREW for fastening Refs.56 or 116 to top plate	8098-1300
29101	59	NUT	8109-193
29102	60	WASHER	7828-139
29103	61	NUT	8109-194
69705	62	WASHER	7828-287
72948	63	NUT	8109-383
62977	64	SCREW	8098-845
134516	65	LOCK WASHER	8486-368
131262	66	R.H. BACK POST WITH SILVER TIP	8094-2123
157395	66a	R.H. BACK POST WITH SILVER IMP.CARBON TIP	8094-2234
131261	67	L.H. BACK POST WITH SILVER TIP	8094-2123
157394	67a	L.H. BACK POST WITH SILVER IMP. CARBON TIP	8094-2234
165540	68	R.H. BACK POST WITH SILVER IMP. CARBON TIP (Inc.1-68a, 1-70 and 1-71)	8094-2271
159558	68a	R.H. BACK POST ONLY, for Refs.68 and 105	8094-2233
167528	69	L.H. BACK POST WITH SILVER IMP.CARBON TIP (Inc.1-69a, 1-70 and 1-71)	8094-2271
159559	69a	L.H. BACK POST ONLY, for Refs. 69 and 106	8094-2233
158043	70	CONTACT TIP, SILVER IMP. CARBON	8341-476
	71	SCREW WITH NUT AND WASHERS (Inc.1-65, 1-71a, 1-72, 1-73 and 1-74)	12471-
57996	71a	SCREW ONLY, for Ref.71	8098-845
173737	72	NUT LOCK	8486-403
151836	73	NUT	8109-445
20686	74	WASHER	7828-108
178251	75	LOCK WASHER	8486-405
150140	76	LOCK WASHER	8486-367
171092	77	LOCK WASHER	8486-405
138073	78	LOCK WASHER	8486-155

UNION SWITCH & SIGNAL CO.

PIECE	REF.	DESCRIPTION	DWG. REF.
134400	79	NUT LOCK	8486-371
131245	80	TERMINAL POST (Front Contact Holder)	8094-2122
140833	81	CONTACT SPRING (No flexible connector, used with Ref.82)	8385-2336
	82	CONTACT SPRING WITH FLEXIBLE CONNECTOR	8385-2336
	83	CONTACT SPRING WITH FLEXIBLE CONNECTOR	8385-2336
181198	84	CONNECTOR without Flexible Connector	8064-746
184290	85	SCREW	8098-924
181200	86	CONNECTOR without Flexible Connector	8064-746
163331	87	CONNECTOR without Flexible Connector	8064-692
179443	88	BOLT LOCK	8486-399
181196	89	CONNECTOR without Flexible Connector	8064-747
188746	90	CONNECTOR without Flexible Connector	8064-795
248700	91	AUXILIARY CORE for "DP-21" Relay	8101-357
47290	92	CONNECTOR	8064-305
156580	93	STOP SPRING	8385-2191
170966	94	CONTACT SPRING SUPPORT	9968-1014
150113	95	CONTACT SPRING SUPPORT	9968-849
150166	96	SCREW	8098-550
168826	97	WASHER	8078-1499
181483	98	WASHER, 1/16 in. thick	8078-1499
181481	98a	WASHER, 1/8 in. thick	8078-1499
180392	99	NAME PLATE for 6 Pt. 4N-4R "DP-20" Relay	8225-433
188762	99a	NAME PLATE for 6 Pt. 4N-4R "DP-21" Relay	8225-377
	100	SCREW, NO.4-40 x 1/4 in. Rd.Hd.Self Tapping (Tin Pl.)	
184680	101	COIL LOCK	8735-784
184902	102	WASHER (Spacer)	7828-379
193420	103	BACKSTRAP BRACKET	8231-74
199199	104	CAP SCREW	8099-232
206460	105	R.H. BACK POST WITH SILVER IMP. CARBON TIP (Inc.1-68a, 1-71, and 1-107)	8094-2271
206461	106	L.H. BACK POST WITH SILVER IMP. CARBON TIP (Inc.1-69a, 1-71, and 1-107)	8094-2271

UNION SWITCH & SIGNAL CO.

PIECE	REF.	DESCRIPTION	DWG. REF.
100769	107	CONTACT TIP, SILVER IMP.CARBON	8341-518
	108	CONTACT SPRING WITH FLEXIBLE CONNECTOR	8385-2336
242427	109	SHELF TYPE SHOCK ABSORBER BASE COMPLETE	12404-50
242471	110	WALL TYPE SHOCK ABSORBER BASE COMPLETE	12404-51
184289	111	HOLD DOWN POLE PIECE	8250-100
181444	112	MAIN COIL (335-Ohms) for Refs.B and Bb	8133-426
181641	112a	MAIN COIL (200-Ohms) for Ref.Ba	8133-426
181445	113	AUXILIARY COIL (135-Ohms) for Refs.B, Ba and Bb	8133-427
	114	MACHINE SCREW, NO.14-24 x 1-5/8 in. Fil.Hd.S. (Tin Pl.) with Nut Ref.114a, (Not shown. Used for attaching insulating blocks Refs.35 or 36 to top plate when back contacts are not required)	
410442	114a	NUT ONLY for Ref.114	
248024	115	BACKSTOP PIN	8097-955
248022	116	BACKSTOP BRACKET	10914-1666
	117	SCREW Ref.117a, with Nut Ref.24 and Lock Washer Ref.57	
248023	117a	SCREW	8098-1475
248704	118	AUXILIARY ARMATURE ARM AND COUNTERWEIGHT SUPPORT COMPLETE (Inc.1-19a, 1-20, 2-21, 1-22, 2-23, 2-24, 1-25 and 1-115) for "DP-21" Relay	C-9406-1

11-25-46

PLATE W-44

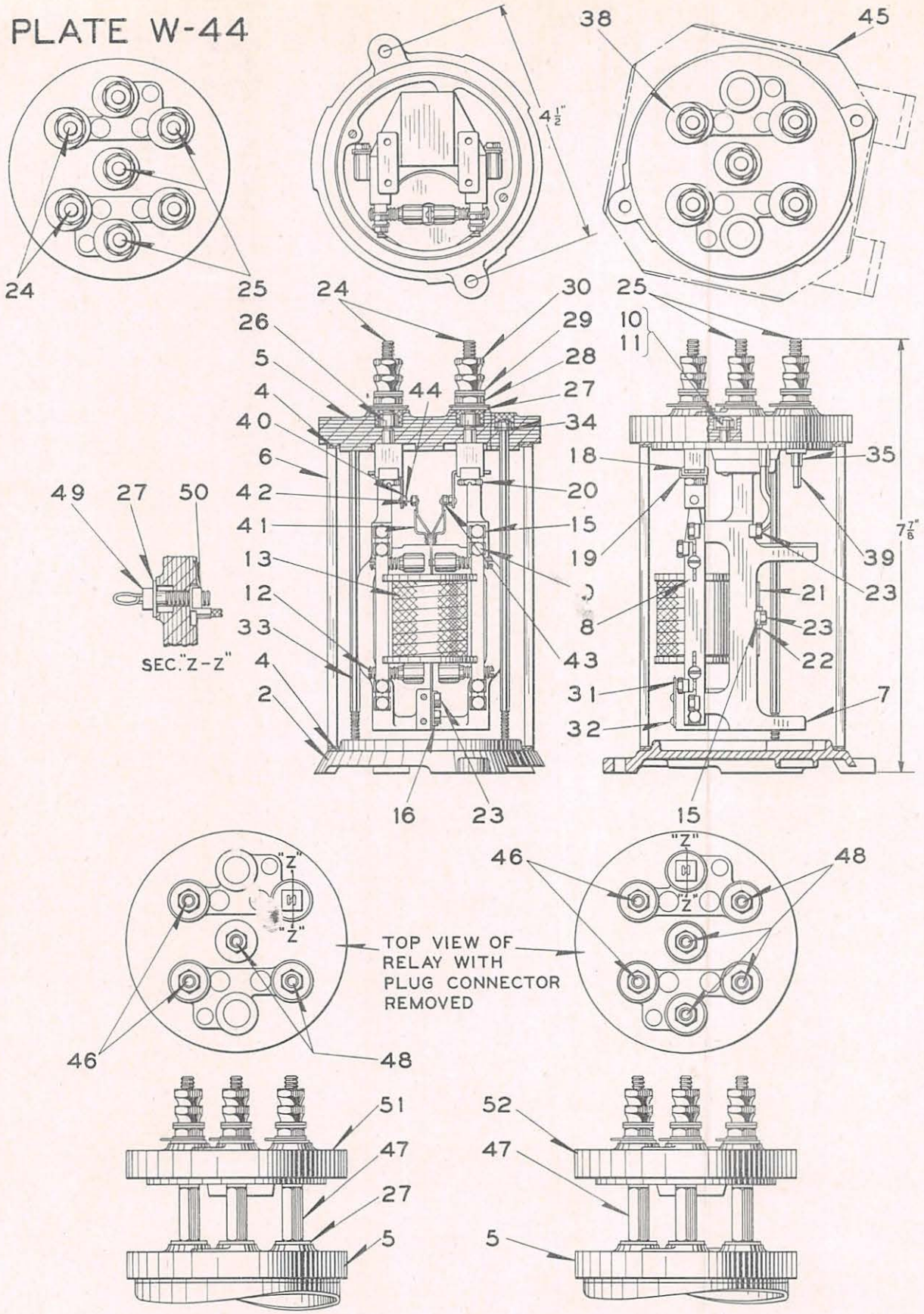

2-2-42

STYLE P-4 RELAY (1 POINT)

UNION SWITCH & SIGNAL CO.

STYLE "P-4" RELAY

(1 POINT)

For Plug Connectors refer to Plate W-75A.

Use this Plate for ordering repair parts for original design only. See Plate W-44-1 for complete relays.

Order by Plate, Piece, Reference and Abbreviated Description

PIECE	REF.	DESCRIPTION	DWG. REF.
214034	2	BASE WITH GASKET	B-12577-1
116925	4	GASKET for Refs.2 and 5	8078-514
	5	TOP PLATE WITH GASKET	C-16642-5
213947	6	GLASS SHIELD	8163-49
107079	7	MOUNTING FRAME	C-16642-6
107149	8	BACK STRAP	8162-275
211046	9	SCREW	8098-1437
	10	MACHINE SCREW, NO.10-30 x 7/8 in. Fil.Hd.S. (Tin Pl.)	
44999	11	WASHER	7828-206
101622	12	POLE PIECE	8250-110
221359	13	MAGNET COIL COMPLETE, 0.70-Ohm (0.60-0.10)	8133-551
222521	13a	MAGNET COIL COMPLETE, 0.30-Ohm	8133-548
223348	13b	MAGNET COIL COMPLETE, 6-Ohms	8133-548
224223	13c	MAGNET COIL COMPLETE, 0.40-Ohm (0.30 - 0.10)	8133-551
225470	13d	MAGNET COIL COMPLETE, 0.3-90-Ohms	8133-551
134516	15	LOCK WASHER	8486-368
214138	16	LOCK WASHER	8486-399
109438	18	LOCK WASHER	8486-310
163639	19	LOCK WASHER	8486-197
189165	20	SCREW	8098-403
101635	21	PERMANENT MAGNET	12586-13
107154	22	PERMANENT MAGNET CLAMP	10914-1037
162755	23	SCREW	8098-165
	24	TERMINAL POST COMPLETE with Nuts and Washers (Inc.1-24a, 1-18, 1-19, 1-20, 1-26, 1-27, 1-28, 3-29, 2-30)	12451-

UNION SWITCH & SIGNAL CO.

PIECE	REF.	DESCRIPTION	DWG. REF.
214031	24a	TERMINAL POST ONLY for Ref.24	8094-982
	25	TERMINAL POST COMPLETE with Nuts and Washers (Inc.1-25a, 1-26, 1-27, 1-28, 3-29 and 2-30)	12451-
115706	25a	TERMINAL POST ONLY for Ref.25	8094-1192
69706	26	NUT	8109-383
69705	27	WASHER	7828-287
29103	28	NUT	8109-194
29102	29	WASHER	7828-139
29101	30	NUT	8109-193
107155	31	NAME PLATE	8225-538
	32	MACHINE SCREW, NO.2-56 x 1/8 in. Rd.Hd.Br. (N.P.)	
107243	33	SCREW	8098-1425
195397	34	WASHER	7828-368
133634	35	TERMINAL	8244-120
152702	36	SEAL (Not shown)	8988-33
	37	SEAL WIRE 9 in. LONG (Not shown)	
142777	38	TAG (Orders should specify marking desired)	8988-75
	39	CAMBRIC TUBING .097 in. I.D. x .157 in. O.D. Varnished Black (Orders should specify length desired)	
219329	40	FRONT OR BACK POST COMPLETE (Sil.Plat.Contact Tip)	8094-2420
219335	41	ARMATURE COMPLETE (Sil.Plat.Contact Tips)	8157-472
219332	42	FRONT CONTACT TIP (Sil.Plat.) for Ref.41	8385-2680
219333	43	BACK CONTACT TIP (Sil.Plat.) for Ref.41	8385-2680
189166	44	CONTACT TIP (Sil.Plat.) for Ref.40	8341-516
221663	45	WALL MOUNTING BRACKET	12404-42
	46	TERMINAL POST COMPLETE with Plug Receptacle, Washers and Screw (Inc.1-46a, 1-18, 1-19, 1-20, 1-26, 1-27 and 1-47)	12451-
214032	46a	TERMINAL POST ONLY for Ref.46	8094-982
107195	47	TERMINAL POST (Plug Receptacle)	8094-2398
	48	TERMINAL POST COMPLETE with Plug Receptacle and Washer (Inc. 1-48a, 1-26, 1-27 and 1-47)	12451-
141688	48a	TERMINAL POST ONLY for Ref.48	8094-1192
	49	TERMINAL POST COMPLETE with Nut and Washer (Plug) (Inc.1-49a, 1-27 and 1-50)	12451-

UNION SWITCH & SIGNAL CO.

PIECE	REF.	DESCRIPTION	DWG. REF.
107894	49a	TERMINAL POST ONLY (Plug) for Ref.49.....	8094-2399
410442	50	NUT	
250570	51	FIVE WAY PLUG CONNECTOR COMPLETE. For details refer to Plate W-75A.....	C-16642-7
220730	52	SEVEN WAY PLUG CONNECTOR COMPLETE. For details refer to Plate W-75A.....	C-16642-7

11-25-46

UNION SWITCH & SIGNAL CO.

STYLE "P-4" RELAY

(1 POINT)

For Plug Connectors refer to Plate W-75A.
If Wall Mounting Bracket Ref.54 is desired, orders should so state.

Order by Plate, Piece, Reference and Abbreviated Description

STYLE "P-4" ONE POINT RELAY COMPLETE. With Single Winding Coil and Top Plate not arranged for Plug Coupler.....Dwg. C-16643-4

PIECE	REF.	CONTACT DESCRIPTION	KIND OF RELAY	COIL OHMS	MIN.WORKING CURRENT	REMARKS
222974	A	1F-1B (Sil.Plat.to Sil.Plat.)	Track	0.30	0.215 Amp.	For Primary Battery Track Circuit
225329	Aa	1F-1B (Sil.Plat.to Sil.Plat.)	Track	0.30	0.425 Amp.	For Storage Battery Track Circuit
223178*	Ab	1F-1B (Sil.Plat.to Sil.Plat.)	Track	6	0.05 Amp.	For Multiple Approach Track Circuit
237722	Ac	1F-1B (Sil.Plat.to Sil.Plat.)	Track	0.3	0.600 Amp.	For Storage Battery Track Circuit
239636	Ad	1F-1B (Sil.Plat.to Sil.Plat.)	Track	0.30	0.320 Amp.	For Edison Storage Battery Track Circuit

STYLE "P-4" ONE POINT RELAY COMPLETE. With Double Winding Coil and Top Plate not arranged for Plug Coupler.....Dwg.C-16643-4

PIECE	REF.	CONTACT DESCRIPTION	KIND OF RELAY	COIL OHMS	MIN.WORKING CURRENT	REMARKS
224274	B	1F-1B (Sil.Plat.to Sil.Plat.)	Track	0.4 (0.3-0.1)	0.215 Amp.	For Primary Battery Track Circuit
224275	Ba	1F-1B (Sil.Plat.to Sil.Plat.)	Track	0.4 (0.3-0.1)	0.425 Amp.	For Storage Battery Track Circuit
223958	Bb	1N-1R (Sil.Plat.to Sil.Plat.)	Track	0.3-90	0.300 Amp.	For Polar Stick
213177	Bc	1F-1B (Sil.Plat.to Sil.Plat.)	Track	0.7 (0.6-0.1)	0.200 Amp.	For "V" Relay Operation.
236750	Bd	1N-1R (Sil.Plat.to Sil.Plat.)	Track	0.16-18.0	0.500 Amp.	For Polar Stick
257737	Be	1F-1B (Sil.Plat.to Sil.Plat.)	Track	0.10-300	0.820 Amp.	For Storage Battery Track Circuit
236749	Bf	1F-1B (Sil.Plat.to Sil.Plat.)	Track	0.41 (0.16-0.25)	0.550 Amp.	For Storage Battery Track Circuit. Using Resistor, Ref.14

UNION SWITCH & SIGNAL CO.

STYLE "P-4" ONE POINT RELAY COMPLETE. With Single Winding
Coil and Top Plate arranged for Plug Coupler Ref.50.....Dwg.C-16643-4

PIECE	REF.	CONTACT DESCRIPTION	KIND OF RELAY	COIL OHMS	MIN.WORKING CURRENT	REMARKS
228605	C	1F-1B (Sil.Plat.to Sil.Plat.)	Track	0.30	0.215 Amp.	For Primary Battery Track Circuit (without Plug Connector)
228595	Ca	1F-1B (Sil.Plat.to Sil.Plat.)	Track	0.30	0.215 Amp.	For Primary Battery Track Circuit (with Plug Connector)
228607	Cb	1F-1B (Sil.Plat.to Sil.Plat.)	Track	0.30	0.425 Amp.	For Storage Battery Track Circuit (without Plug Connector)
228597	Cc	1F-1B (Sil.Plat.to Sil.Plat.)	Track	0.30	0.425 Amp.	For Storage Battery Track Circuit (with Plug Connector)
228606	* Cd	1F-1B (Sil.Plat.to Sil.Plat.)	Track	6	0.05 Amp.	For Multiple Approach Track Circuit (without Plug Connector)
228596	* Ce	1F-1B (Sil.Plat.to Sil.Plat.)	Track	6	0.05 Amp.	For Multiple Approach Track Circuit (with Plug Connector)

STYLE "P-4" ONE POINT RELAY COMPLETE. With Double Winding
Coil and Top Plate arranged for Plug Coupler Ref.51.....Dwg.C-16643-4

PIECE	REF.	CONTACT DESCRIPTION	KIND OF RELAY	COIL OHMS	MIN.WORKING CURRENT	REMARKS
226239	D	1F-1B (Sil.Plat.to Sil.Plat.)	Track	0.4 (0.3-0.1)	0.215 Amp.	For Primary Battery Track Circuit (without Plug Connector)
226240	Da	1F-1B (Sil.Plat.to Sil.Plat.)	Track	0.4 (0.3-0.1)	0.215 Amp.	For Primary Battery Track Circuit (with Plug Connector)
225380	Db	1F-1B (Sil.Plat.to Sil.Plat.)	Track	0.4 (0.3-0.1)	0.425 Amp.	For Storage Battery Track Circuit (without Plug Connector)
225381	Dc	1F-1B (Sil.Plat.to Sil.Plat.)	Track	0.4 (0.3-0.1)	0.425 Amp.	For Storage Battery Track Circuit (with Plug Connector)

STYLE "P-4" ONE POINT RELAY COMPLETE. With Single Winding
Coil and Top Plate arranged for Screw-Down Plug Coupler Ref.55...Dwg.C-16643-10

PIECE	REF.	CONTACT DESCRIPTION	KIND OF RELAY	COIL OHMS	MIN.WORKING CURRENT	REMARKS
264821	E	1F-1B (Sil.Plat.to Sil.Plat.)	Track	0.30	0.215 Amp.	For Primary Battery Track Circuit

* Without Magnet Shield

PLATE W-44-1

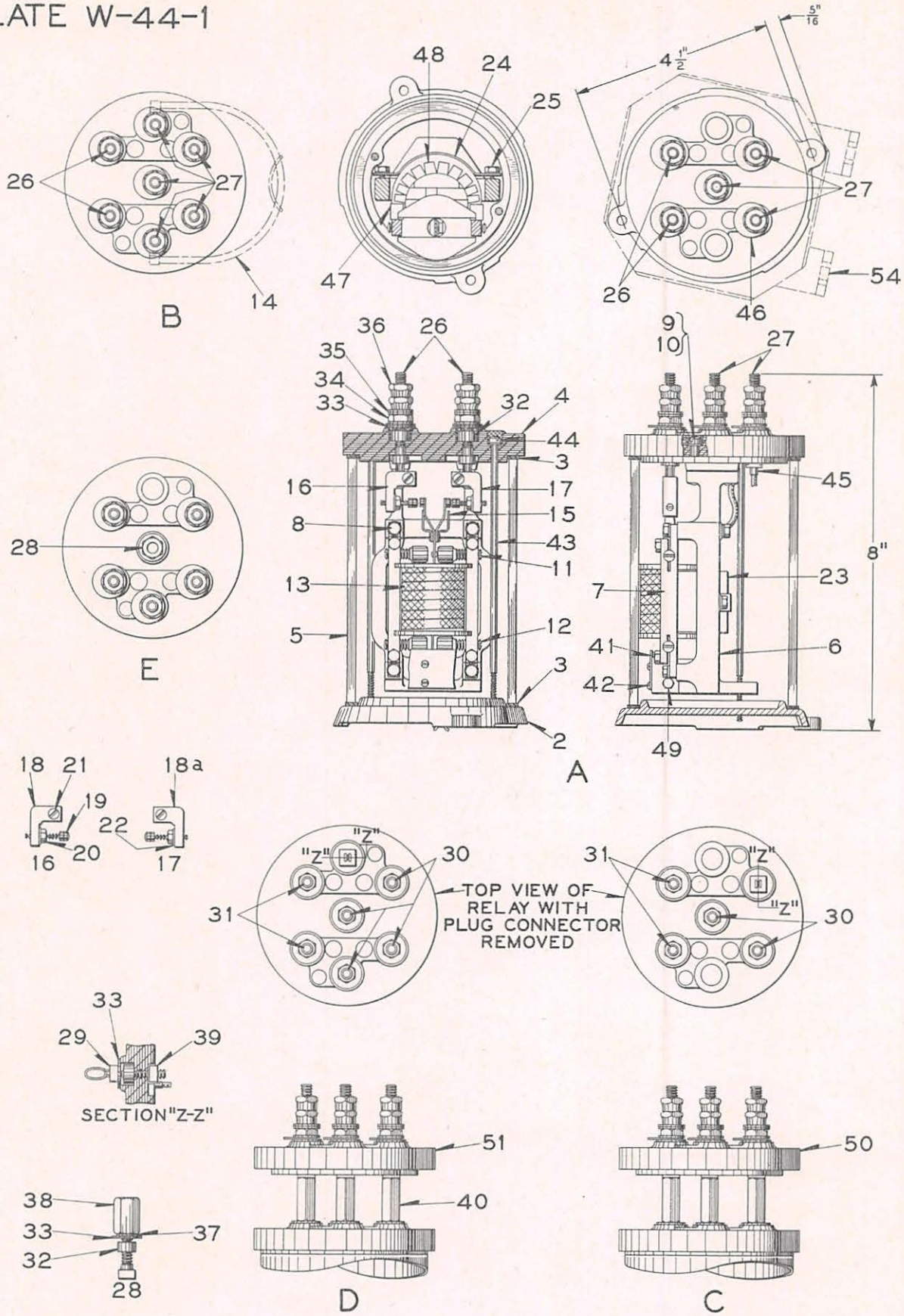

11-25-46

STYLE "P-4" ONE POINT RELAY.

UNION SWITCH & SIGNAL CO.

PIECE	REF.	DESCRIPTION	DWG. REF.
234611	2	BASE WITH GASKET	C-16642-1
219978	3	GASKET for Refs.2 and 4	8078-1705
107078	4	TOP PLATE WITH GASKET	C-16642-5
213947	5	GLASS SHIELD	8163-49
107079	6	MOUNTING FRAME	C-16642-6
107149	7	BACK STRAP	8162-275
211046	8	SCREW	8098-1437
	9	MACHINE SCREW, NO.10-30 x 7/8 in. Fil.Hd.S. (Tin Pl.)	
44999	10	WASHER	7828-206
101622	11	POLE PIECE (Upper)	8250-110
246932	12	POLE PIECE (Lower)	8250-110
222521	13	MAGNET COIL COMPLETE, 0.30-Ohm	8133-548
223348	13a	MAGNET COIL COMPLETE, 6-Ohms	8133-548
224223	13b	MAGNET COIL COMPLETE, 0.4-Ohm (0.3-0.1)	8133-551
225470	13c	MAGNET COIL COMPLETE, 0.3-90 Ohms	8133-551
221359	13d	MAGNET COIL COMPLETE, 0.7-Ohm (0.6-0.1)	8133-551
237384	13e	MAGNET COIL COMPLETE, 0.16-18.0 Ohms	8133-551
257736	13f	MAGNET COIL COMPLETE, 0.10-300 Ohms	8133-551
237383	13g	MAGNET COIL COMPLETE, 0.41-Ohms (0.16-0.25)	8133-551
238569	14	RESISTOR (Nominal Resistance 0.25 Ohm)	9065-299
219335	15	ARMATURE COMPLETE (Silver Plat.Contact Tips)	8157-472
227679	15a	ARMATURE COMPLETE (Silver Plat.Contact Tips) for Polar Stick Relay	8157-487
237055	16	FRONT CONTACT POST COMPLETE (Inc.1-18, 1-19, 1-20, 1-21 and 1-22)	8094-2454
237056	17	BACK CONTACT POST COMPLETE (Inc.1-18a, 1-19, 1-20, 1-21 and 1-22)	8094-2454
219041	18	R.H. CONTACT SUPPORT	C-16642-9
219727	18a	L.H. CONTACT SUPPORT	C-16642-9
219051	19	CONTACT POST (Sil.Plat.Tip)	8094-2419
1505	20	NUT	8109-11
	21	MACHINE SCREW, NO.6-40 x 3/8 in. Flat.Hd.S. (Tin Pl.)	
	22	LOCK WASHER, NO. 6 Ph.Bz. (Internal Teeth) (N.P.)	

UNION SWITCH & SIGNAL CO.

PIECE	REF.	DESCRIPTION	DWG. REF.
101635	23	PERMANENT MAGNET	12586-13
242737	24	PERMANENT MAGNET CLAMP	11893-1023
234612	24a	PERMANENT MAGNET CLAMP (Used when magnet shield is not required)	10914-1037
	25	SCREW Ref.25a with No.6 Ph.Bz.Lock Washer (Internal Teeth) (N.P.)	
162755	25a	SCREW ONLY	8098-165
	26	TERMINAL POST COMPLETE with Nuts and Washers (Inc.1-26a, 1-32, 1-33, 1-34, 3-35, and 2-36)	12451-
237075	26a	TERMINAL POST ONLY for Ref.26	8094-2417
	27	TERMINAL POST COMPLETE with Nuts and Washers (Inc.1-27a, 1-32, 1-33, 1-34, 3-35, and 2-36)	12451-
115706	27a	TERMINAL POST ONLY for Ref.27	8094-1192
	28	TERMINAL POST COMPLETE with Nuts and Washers (Inc.1-28a, 1-32, 1-33, 1-37 and 1-38)	12451-
123633	28a	TERMINAL POST ONLY for Ref.28	8094-1192
	29	TERMINAL POST COMPLETE with Nuts and Washers (Plug) (Inc.1-29a, 1-33 and 1-39)	12451-
107894	29a	TERMINAL POST ONLY (Plug) for Ref.29	8094-2399
	30	TERMINAL POST COMPLETE with Nut, Plug Receptacle and Washer (Inc.1-30a, 1-32, 1-33 and 1-40)	12451-
141688	30a	TERMINAL POST ONLY for Ref.30	8094-1192
	31	TERMINAL POST COMPLETE with Nut, Plug Receptacle and Washer (Inc.1-31a, 1-32, 1-33 and 1-40)	12451-
237106	31a	TERMINAL POST ONLY for Ref.31	8094-2417
69706	32	NUT	8109-383
69705	33	WASHER	7828-287
29103	34	NUT	8109-194
29102	35	WASHER	7828-194
29101	36	NUT	8109-193
	37	1/4 in. PLAIN S. LOCK WASHER (3/32 in. x 1/16 in.) (Tin Pl.)	
260579	38	NUT	8109-509
410422	39	NUT	
107195	40	TERMINAL POST (Plug Receptacle)	8094-2398
107155	41	NAME PLATE	8225-538
	42	SCREW, NO.4-40 x 1/4 in. Rd.Hd. (N.P.)	

UNION SWITCH & SIGNAL CO.

PIECE	REF.	DESCRIPTION	DWG. REF.
107243	43	SCREW	8098-1425
195397	44	WASHER	7828-368
133634	45	TERMINAL	8244-120
142777	46	TAG (Orders should specify marking desired)	8988-75
242735	47	SEPARATOR	8072-941
242721	48	MAGNET SHIELD	11893-1021
	49	SCREW Ref.25 with Washer Ref.49a	
20686	49a	WASHER	7828-108
250570	50	FIVE WAY PLUG CONNECTOR COMPLETE, for details refer to Plate W-75A	C-16642-7
220730	51	SEVEN WAY PLUG CONNECTOR COMPLETE, for details refer to Plate W-75A	C-16642-7
152702	52	SEAL (Not shown)	8988-33
	53	SEAL WIRE 9 in. LONG (Not shown)	
221663	54	WALL MOUNTING BRACKET	12404-42
264852	55	PLUG COUPLER COMPLETE, Screw Down Type. For details refer to Plate W-75A (Not shown)	C-16765-8

11-25-46

PLATE W-44-2

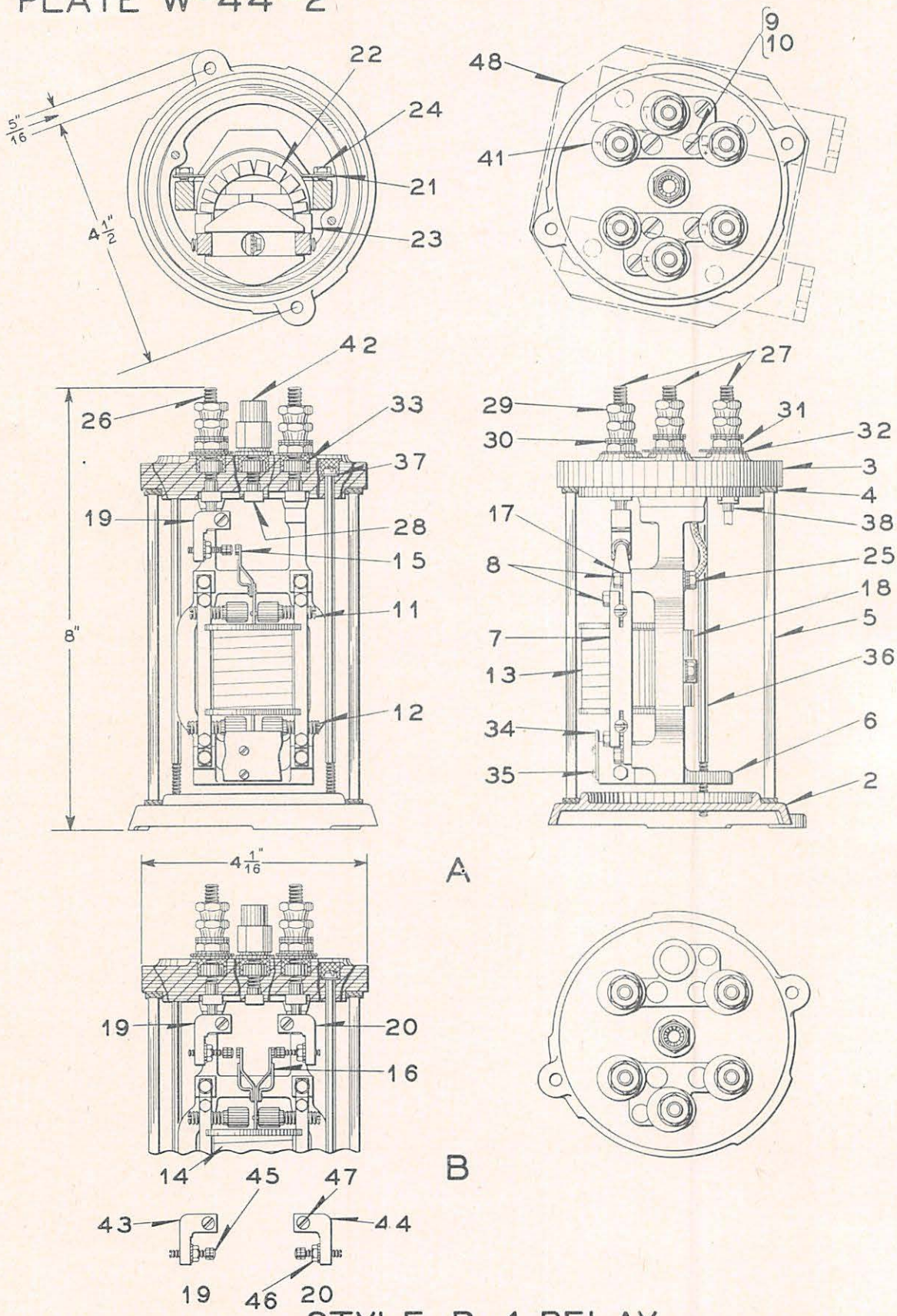

STYLE P-4 RELAY

UNION SWITCH & SIGNAL CO.

STYLE "P-4" RELAY

For Plug Couplers refer to Plate W-75A.
If Wall Mounting Bracket Ref.48 is desired, orders should so state.

Order by Plate, Piece, Reference and Abbreviated Description Given in Heavy Face Type Only

PIECE	REF.	DESCRIPTION	DWG. REF.
273463	A	STYLE "P-4" ONE POINT RELAY COMPLETE. With 1F Contact, Coil 0.30 and 15.0-Ohms, 0 Amp.Minimum Working Current. For approach control service	C-16643-10
264821	B	STYLE "P-4" ONE POINT RELAY COMPLETE. With 1F-1B Contacts, Coil 0.3-Ohms, 0.215 Amp.Minimum Working Current. For primary battery track circuit	C-16643-10
234610	2	BASE	C-16642-1
253609	3	TOP PLATE COMPLETE with Gasket. (Orders should state relay with which Top Plate is to be used so proper holes can be drilled)	C-16642-5
219978	4	GASKET	8078-1705
213947	5	GLASS SHIELD	8163-49
107079	6	FRAME	C-16642-6
107149	7	BACK STRAP	8162-275
211046	8	SCREW	8098-1437
	9	MACHINE SCREW, No.10-30 x 7/8" Fil.Hd.S. (Tin Pl.)	
44999	10	WASHER	7828-206
101622	11	POLE PIECE (Upper)	8250-110
246932	12	POLE PIECE (Lower)	8250-110
273470	13	COIL COMPLETE, 0.3-15 Ohms	8133-551
222521	14	COIL COMPLETE, 0.3 Ohm	8133-548
273473	15	ARMATURE COMPLETE (Sil.Plat.Contact Tip)	8157-511
219335	16	ARMATURE COMPLETE (Sil.Plat.Contact Tips)	8157-472
	17	LOCK WASHER, No.6 Ph.Bz.(Int.Teeth) (N.P.)	
101635	18	PERMANENT MAGNET	12586-13
237055	19	FRONT CONTACT POST COMPLETE (Inc.1-17, 1-43, 1-45, 1-46 and 1-47)	8094-2454

UNION SWITCH & SIGNAL CO.

PIECE	REF.	DESCRIPTION	DWG. REF.
237056	20	BACK CONTACT POST COMPLETE (Inc.1-17, 1-44, 1-45, 1-46 and 1-47)	8094-2454
242737	21	PERMANENT MAGNET CLAMP	11893-1023
242721	22	MAGNET SHIELD	11893-1021
242735	23	SEPARATOR	8072-941
	24	SCREW Ref.24a with No.6 Ph.Bz.Lock Washer (Int.Teeth) (N.P.)	
162755	24a	SCREW	8098-165
	25	SCREW Ref.24a with No.6 Ph.Bz.Lock Washer (Int.Teeth) (N.P.) and Washer Ref.25a	
20686	25a	WASHER	7828-108
	26	TERMINAL POST COMPLETE with Nuts and Washers (Inc.1-26a, 2-29, 3-30, 1-31, 1-32 and 1-33)	12451-
237075	26a	TERMINAL POST ONLY	8094-2417
	27	TERMINAL POST CCMPLETE with Nuts and Washers (Inc.1-27a, 2-29, 3-30, 1-31, 1-32 and 1-33)	12451-
115706	27a	TERMINAL POST ONLY	8094-1192
	28	TERMINAL POST COMPLETE with Nut, Plug Receptacle and Washer (Inc.1-28a, 1-32, 1-33, 1-42 and one 1/4" Pl.S.Lock Washer (M) (Tin Pl.)	12451-
123633	28a	TERMINAL POST ONLY	8094-1192
29101	29	NUT	8109-193
29102	30	WASHER	7828-139
29103	31	NUT	8109-194
69705	32	WASHER	7828-287
69706	33	NUT	8109-383
107155	34	NAME PLATE	8225-538
	35	SCREW, No.4-40 x 1/4" Rd.Hd.Self Tapping (Tin Pl.)	
107243	36	SCREW	8098-1425
195397	37	WASHER	7828-368
133634	38	TERMINAL	8244-120
152702	39	SEAL (Not Shown)	8988-33
	40	SEAL WIRE, 9" long (Not Shown)	
142777	41	TAG (Orders should specify marking desired)	8988-75
260579	42	NUT	8109-509

UNION SWITCH & SIGNAL CO.

PIECE	REF.	DESCRIPTION	DWG. REF.
219041	43	R.H. CONTACT SUPPORT	C-16642-9
219727	44	L.H. CONTACT SUPPORT	C-16642-9
219051	45	CONTACT POST (Sil.Plat.Tip)	8094-2419
1505	46	NUT	8109-11
	47	SCREW, No.6-40 x 3/8" Flat Hd.S. (Tin Pl.)	
221663	48	WALL MOUNTING BRACKET	12404-42
273472	49	PLUG COUPLER COMPLETE, Screw Down Type (Not Shown) For details refer to Plate W-75A	C-16765-8
264852	49a	PLUG COUPLER COMPLETE, Screw Down Type (Not Shown) For details refer to Plate W-75A	C-16765-8

3-23-49

PLATE W-44A

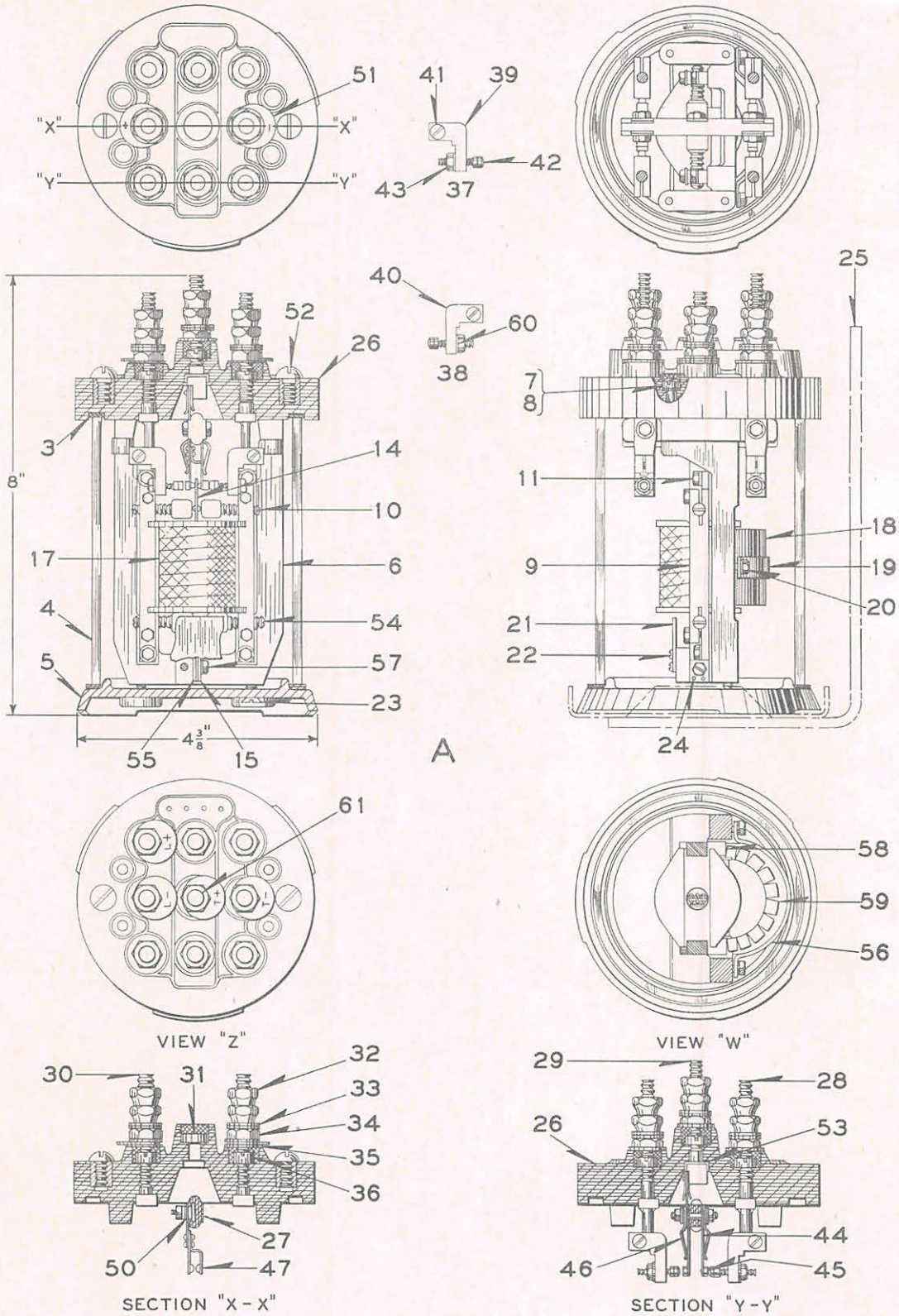

11-25-46 STYLE P-4 RELAY (2-POINT)

UNION SWITCH & SIGNAL CO.

STYLE "P-4" RELAY

(2-POINT)

For Plug Couplers refer to Plate W-75A.

If Wall Mounting Bracket Ref.25 is desired, orders should so state.

Order by Plate, Piece, Reference and Abbreviated Description

STYLE "P-4" RELAY WITH 2F-2B CONTACTS (Without Wall Mounting Bracket Ref.25).....						C-16643-6
PIECE	REF.	CONTACT DESCRIPTION	COIL REF.	OHMS	MINIMUM WORKING CURRENT	REMARKS
218510	A	2F-2B (Sil.Plat.to Sil.Plat.)	17	0.80	0.500 Amp.	A.R.Polar Stick Relay. Using Shield per View "W"
218528	Aa	2F-2B (Sil.Plat.to Sil.Plat.)	17a	0.60	0.225 Amp.	TR Polar Bias Relay. As shown
220119	Ab	2F-2B (Sil.Plat.to Sil.Plat.)	17a	0.60	0.300 Amp.	TR Polar Bias Relay. As shown
222390	Ac	2F-2B (Sil.Plat.to Sil.Plat.)	17b	0.3	0.320 Amp.	TR Polar Bias Relay. Using Shield per View "W"
222391	Ad	2F-2B (Sil.Plat.to Sil.Plat.)	17b	0.3	0.425 Amp.	TR Polar Bias Relay. Using Shield per View "W"
224432	Ae	2F-2B (Sil.Plat.to Sil.Plat.)	17	0.08	1 Amp.	A.R.Polar Stick Relay. Using Shield per View "W"
224434	Af	2F-2B (Sil.Plat.to Sil.Plat.)	17b	0.3	0.600 Amp.	TR Polar Bias Relay. Using Shield per View "W"
232638	Ah	2F-2B (Sil.Plat.to Sil.Plat.)	17d	270	.016 Amp.	Line Polar Bias. As shown
236450	Aj	2F-2B (Sil.Plat.to Sil.Plat.)	17e	4.0	.075 Amp.	Line Polar Bias. As shown
242217	Ak	2F-2B (Sil.Plat.to Sil.Plat.)	17f	0.20	.316 Amp.	A.R.Polar Stick Relay. Using Shield per View "W"
253906	Al	2F-2B (Sil.Plat.to Sil.Plat.)	17g	0.10 700	.500 Amp.	A.R.Polar Stick Relay Using Shield per View "W" and Top Plate View "Z"
257335	Am	2F-2B (Sil.Plat.to Sil.Plat.)	17h	0.10	.820 Amp.	A.R.Polar Bias Relay Using Shield per View "W"

UNION SWITCH & SIGNAL CO.

PIECE	REF.	DESCRIPTION	DWG. REF.
219978	3	GASKET	8078-1705
130616	4	GLASS SHIELD	8163-49
219040	5	BASE with Gasket Ref.3	C-16642-9
219038	6	MOUNTING FRAME	C-16642-9
	7	MACHINE SCREW, NO.10-30 x 1-3/16 in. Fil.Hd.Br. (N.P.)	
139539	8	WASHER	7828-346
107149	9	BACK STRAP	8162-275
101622	10	POLE PIECE (Upper)	8250-110
	11	SCREW Ref.11a with No.6 Ph.Bz.Lock Washer (N.P.)	
211046	11a	SCREW ONLY	8098-1437
219319	12	SCREW	8098-1437
219318	14	ARMATURE COMPLETE	8157-471
219046	15	CLAMPING PLATE	12538-238
221276	17	COIL COMPLETE (0.08-Ohm)	8133-546
221275	17a	COIL COMPLETE (0.60-Ohm)	8133-548
222521	17b	COIL COMPLETE (0.3-Ohm)	8133-548
232636	17d	COIL COMPLETE (270-Ohms)	8133-572
236699	17e	COIL COMPLETE (4.0-Ohms)	8133-548
242085	17f	COIL COMPLETE (0.20-Ohm)	8133-546
253907	17g	COIL COMPLETE (0.10 - 700 ohms) Double Winding	8133-551
257733	17h	COIL COMPLETE (0.10-Ohm)	8133-546
101635	18	PERMANENT MAGNET	12586-13
219325	19	PERMANENT MAGNET CLAMP	10914-1147
	20	SCREW Ref.20a with No.6 Ph.Bz.Lock Washer (N.P.)	8098-165
166184	20a	SCREW ONLY	8098-165
219326	21	NAME PLATE	8225-564
	22	MACHINE SCREW, NO.4-40 x 1/4 in. Rd.Hd.S. (N.P.)	
	23	MACHINE SCREW, NO.10-30 x 13/16 in. Flat Hd.Br. (N.P.)	
156497	24	PIN	8097-409
221663	25	WALL MOUNTING BRACKET	12404-42
219037	26	TOP PLATE ONLY (Index Pin Holes not drilled)	C-16642-8

UNION SWITCH & SIGNAL CO.

PIECE	REF.	DESCRIPTION	DWG. REF.
219053	27	CONTACT SPRING SUPPORT	8750-2984
	28	TERMINAL POST WITH NUTS AND WASHERS (Inc.1-28a, 2-32, 2-33, 1-34, 1-35 and 1-36)	12451-
237074	28a	TERMINAL POST ONLY	8094-2417
	29	TERMINAL POST WITH SPRING, REINFORCING SPRINGS, NUT LOCK, NUTS AND WASHERS (Inc.1-29a, 2-32, 2-33, 1-34, 1-35, 1-36 and 1-53).	12451-
219048	29a	TERMINAL POST WITH SPRING AND REINFORCING SPRINGS	8094-2416
	30	TERMINAL POST WITH NUTS AND WASHERS (Inc.1-30a, 2-32, 3-33, 1-34, 1-35 and 1-36)	12451-
130200	30a	TERMINAL POST ONLY	8094-1192
	31	DUMMY PLUG..	
29101	32	NUT	8109-193
29102	33	WASHER	7828-139
29103	34	NUT	8109-194
69705	35	WASHER	7828-287
69706	36	NUT	8109-383
219730	37	L.H. CONTACT POST COMPLETE	8094-2418
219050	38	R.H. CONTACT POST COMPLETE	8094-2418
219727	39	L.H. CONTACT SUPPORT	C-16642-9
219041	40	R.H. CONTACT SUPPORT	C-16642-9
	41	MACHINE SCREW, NO.6-40 x 3/8 in. Flat Hd.S. (Tin Pl.)	
219051	42	CONTACT POST WITH SILVER PLAT.TIP	8094-2419
1505	43	NUT	8109-11
219056	44	CONTACT SPRING WITH SILVER PLAT.TIP	8385-2679
189209	45	SILVER PLAT.TIP for Ref.44	8341-516
219061	46	CONTACT SPRING STOP	8735-961
219060	47	OPERATING ARM COMPLETE	12748-21
20686	50	WASHER	7828-108
142777	51	TAG (Orders should specify marking desired)	8988-75
	52	MACHINE SCREW, NO. 14-24 x 3/8 in. Rd.Hd.Br. (N.P.)	
209796	53	NUT LOCK	8486-405
246932	54	POLE PIECE (Lower)	8250-110
241391	55	CLAMPING PLATE	12538-238

UNION SWITCH & SIGNAL CO.

PIECE	REF.	DESCRIPTION	DWG. REF.
242734	56	PERMANENT MAGNET CLAMP	11893-1022
	57	SCREW Ref.57a with No.6 Ph.Bz.Lock Washer (N.P.)	
172622	57a	SCREW ONLY	8098-845
242735	58	SEPARATOR	8072-941
242736	58a	SEPARATOR used previous to 6-17-43	8072-941
242721	59	MAGNET SHIELD	11893-1021
242915	59a	MAGNET SHIELD used previous to 6-17-43	11893-1024
	60	NO.6 PH.BZ.LOCK WASHER (Internal Teeth) N.P.	
	61	TERMINAL POST WITH NUTS AND WASHERS (Inc.1-61a, 2-32, 3-33, 1-34 and 1-35)	12451-
115706	61a	TERMINAL POST ONLY	8094-1192

11-25-46

PLATE W-44E

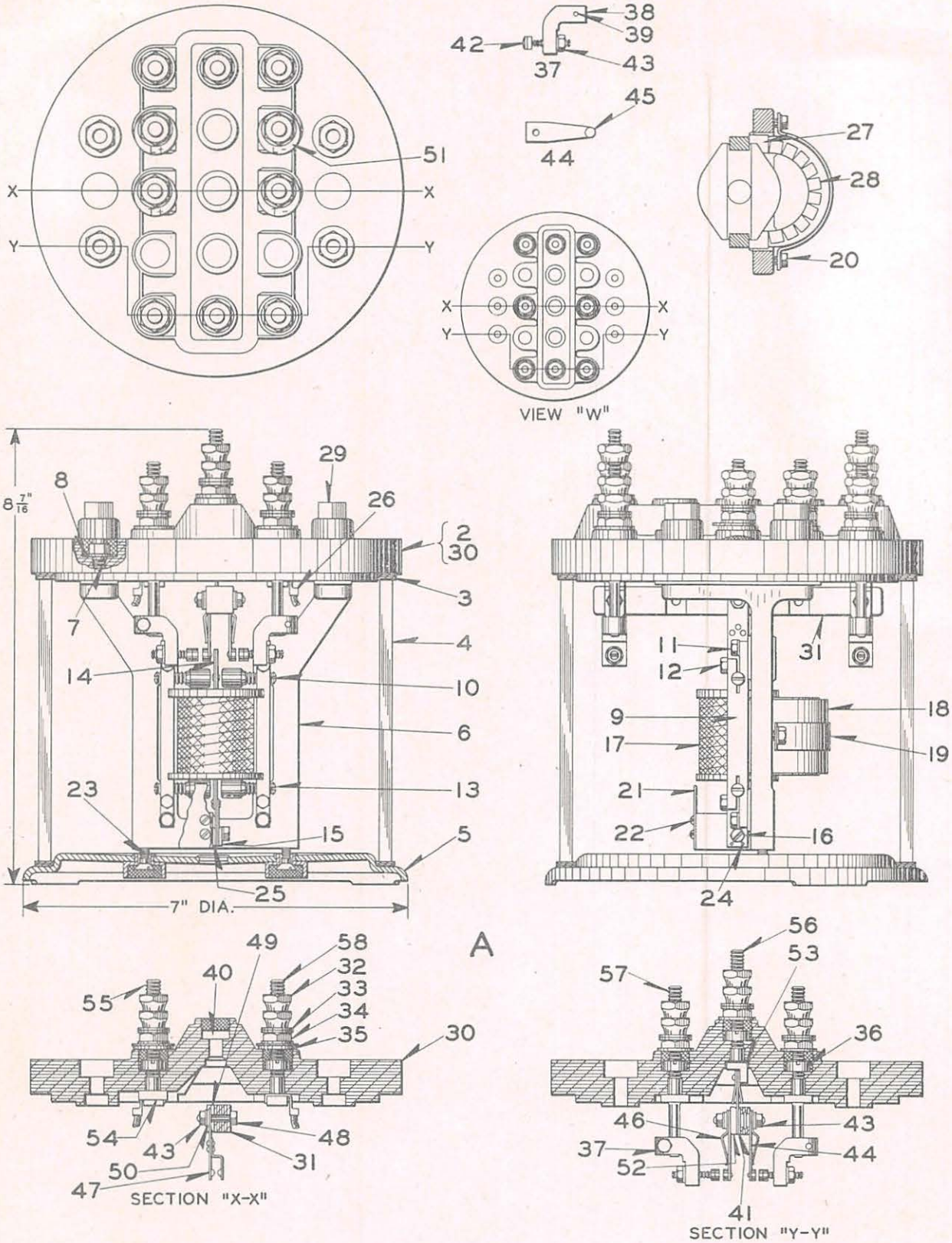

6-25-46

STYLE "P-10" RELAY

UNION SWITCH & SIGNAL CO.

STYLE "P-10" RELAY (2-POINT)

For Plug Couplers refer to Plate W-75

Order by Plate, Piece, Reference and Abbreviated Description

STYLE "P-10" RELAY WITH 2F-2B Contacts..... C-16872-1

PIECE	REF.	CONTACT DESCRIPTION	COIL REF.	OHMS	D. C. VOLTS SECOND WINDING	REMARKS
259730	A	2F-2B L.V. (Sil.Plat. to Sil.Plat.)	17	0.10 300	12	AR Polar Bias Relay
259748	Aa	2F-2B L.V. (Sil.Plat. to Sil.Plat.)	17a	0.10 20	2	AR Polar Bias Relay
261371	Ab	2F-2B L.V. (Sil.Plat to Sil.Plat.)	17b	0.10	--	AR Polar Bias Relay, Single Winding Coil

PIECE	REF.	DESCRIPTION	DWG. REF.
259876	2	TOP PLATE COMPLETE WITH 2F-2B L. V. SILVER PLATINUM TO SILVER PLATINUM CONTACTS, for Refs. A and Aa.....	C-16873-1
262097	2a	TOP PLATE COMPLETE WITH 2F-2B L. V. SILVER PLATINUM TO SILVER PLATINUM CONTACTS, For Ref. Ab (Per View "W").....	C-16873-1
33872	3	GASKET.....	8078-76
259893	4	GLASS SHIELD.....	8163-96
259835	5	BASE with Ventilator and Collars.....	C-16873-3
259843	6	MOUNTING FRAME COMPLETE.....	C-16873-2
219560	7	STUD.....	8114-972
38448	8	WASHER.....	7826-98
107149	9	BACK STRAP.....	8162-275
101622	10	POLE PIECE.....	8250-110
	11	SCREW Ref. 11a with No. 6 Ph. Bz. Lock Washer (Int. Teeth) (N.P.)	
211046	11a	SCREW ONLY.....	8098-1437
219319	12	SCREW.....	8098-1437
246932	13	POLE PIECE.....	8250-110

UNION SWITCH & SIGNAL CO.

PIECE	REF.	DESCRIPTION	DWG. REF.
219318	14	ARMATURE COMPLETE	8157-471
219046	15	CLAMPING PLATE	12538-238
	16	SCREW Ref. 16a with No. 6 Ph. Bz. Lock Washer (Int. Teeth) (N.P.)	8098-845
172622	16a	SCREW ONLY	8098-845
257736	17	DOUBLE WINDING COIL COMPLETE (0.10-300 Ohms)	8133-551
259891	17a	DOUBLE WINDING COIL COMPLETE (0.10-20 Ohms)	8133-551
257733	17b	SINGLE WINDING COIL COMPLETE (0.10 Ohms)	8133-546
101635	18	PERMANENT MAGNET	12586-13
242734	19	PERMANENT MAGNET CLAMP	11893-1022
	20	SCREW Ref. 20a with No. 6 Ph. Bz. Lock Washer (Int. Teeth) (N. P.)	8098-165
166184	20a	SCREW ONLY	8098-165
259947	21	NAME PLATE	8225-866
	22	SCREW, No. 4-40 x 1/4 in. Rd. Hd. S. (Tin Pl.)	
	23	MACHINE SCREW, No. 10-32 x 3/4 in. Flat Hd. S. (Tin Pl.)	
156497	24	PIN	8097-409
241391	25	CLAMP PLATE	12538-238
254130	26	TERMINAL	8244-159
242735	27	SEPARATOR	8072-941
242721	28	MAGNET SHIELD	11893-1021
105713	29	INSULATED NUT	12770-1
103091	30	TOP PLATE ONLY	C-9453-6
102527	31	CONTACT SPRING SUPPORT	8750-2827
29101	32	NUT	8109-193
29102	33	WASHER	7828-139
29103	34	NUT	8109-194
69705	35	WASHER	7828-287
69706	36	NUT	8109-383
259874	37	CONTACT POST COMPLETE	8094-2413
102524	38	CONTACT SUPPORT	C-9453-5
211046	39	SCREW	8098-1437
239949	40	DUMMY PLUG	8078-732

UNION SWITCH & SIGNAL CO.

PIECE	REF.	DESCRIPTION	DWG. REF.
244066	41	GUIDE	12538-241
	42	CONTACT POST WITH NUT AND WASHER (Inc. 1-42a, 1-43 and No. 6 Ph. Bz. Lock Washer (N. P.)	8094-2419
219051	42a	CONTACT POST WITH SILVER PLAT. TIP	8094-2419
1505	43	NUT	8109-11
234910	44	CONTACT SPRING WITH SILVER PLAT. TIP	8385-2679
189166	45	SILVER PLAT. TIP for Ref. 44	8341-516
219061	46	CONTACT SPRING STOP	8735-961
219060	47	OPERATING ARM COMPLETE	12748-21
	48	SCREW Ref. 48a with Nut Ref. 43, Washer Ref. 50 and No. 6 Ph. Bz. Lock Washer (Int. Teeth) (N. P.)	8098-165
259867	48a	SCREW ONLY, for Ref. 48	8098-165
259849	49	GUIDE	12538-241
20686	50	WASHER	7828-108
142777	51	TAG (Orders should specify marking desired)	8988-75
221049	52	GUIDE	12538-241
209796	53	NUT LOCK	8486-405
188259	54	LOCK WASHER	8486-310
	55	TERMINAL POST COMPLETE WITH NUTS AND WASHERS (Inc. 1-58a, 2-32, 3-33, 1-34, 1-35, 1-36 and 1-54)	12451-
	56	TERMINAL POST WITH SPRING, REINFORCING SPRINGS, NUT LOCK, NUTS AND WASHERS (Inc.1-56a, 2-32, 2-33, 1-34, 1-35, 1-36 and 1-53)	12451-
107425	56a	TERMINAL POST WITH SPRING AND REINFORCING SPRINGS	8094-2424
	57	TERMINAL POST COMPLETE WITH NUTS AND WASHERS (Inc.1-57a, 2-32, 2-33, 1-34, 1-35 and 1-36)	12451-
259850	57a	TERMINAL POST ONLY	8094-2368
	58	TERMINAL POST COMPLETE WITH NUTS AND WASHERS (Inc. 1-58a, 2-32, 3-33, 1-34, 1-35 and 1-36)	12451-
130200	58a	TERMINAL POST ONLY	8094-1192

PLATE W-45

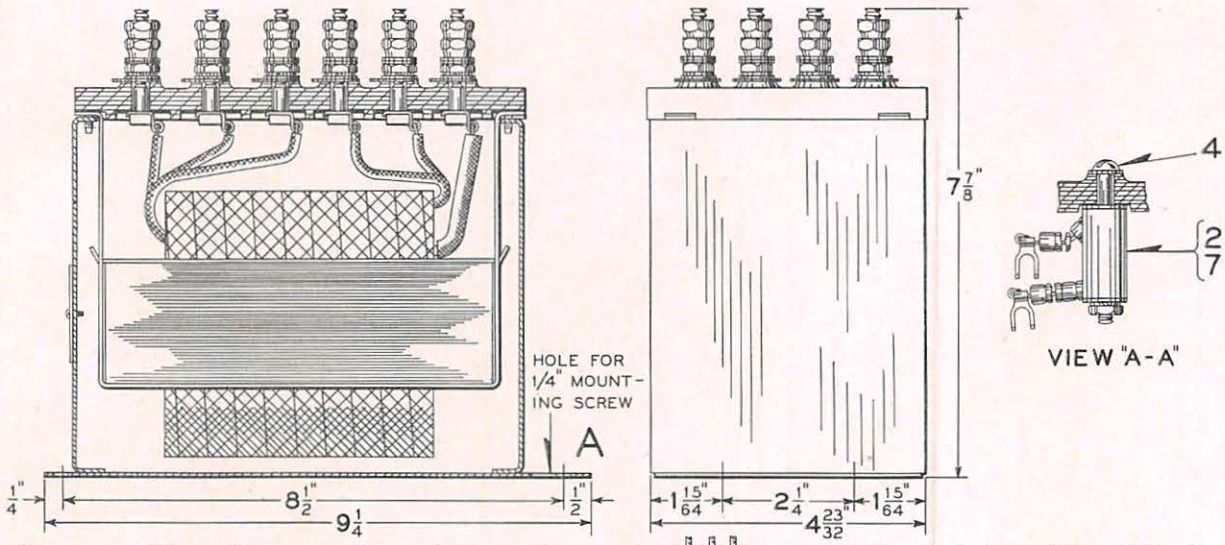

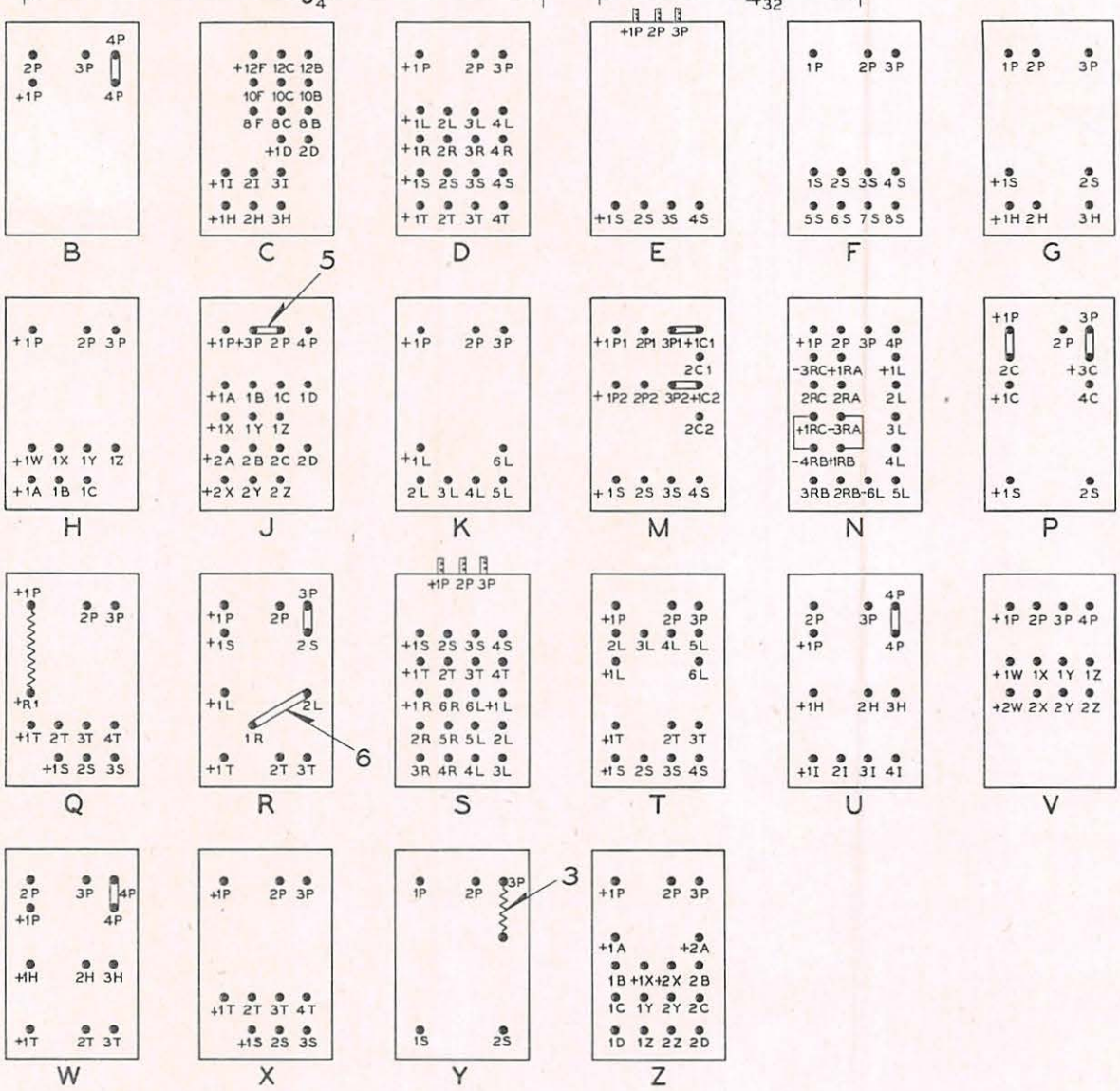

11-25-46 "W-7," "W-10" AND "W-11" TRANSFORMERS

UNION SWITCH & SIGNAL CO.

CODED TRACK CIRCUIT CONTROL SYSTEM

STYLES W-7, W-10 AND W-11 TRANSFORMERS

TRACK, LINE, AND TUNED ALTERNATOR OUTPUT TRANSFORMERS

PIECE	REF.	STYLE	V.A.	CYCLES	PRIMARY VOLTAGE	SECONDARIES: NO.OF OUTPUT SECS.	SECONDARIES: SECONDARY VOLTAGES	SECONDARIES: CURRENT CAP. OF SECS.AMPS.	REMARKS	TERM. BOARD DIAGRAM	SPEC.	DWG. C-9228 SH.
156455	A	W-10	300	60/100	110/100	1	0.37 to 17.0	17.9	Track Transf.with a Main Secondary and an Adjusting Winding	X	2019	4
158698	Ab	W-11	300	60/100	110/100	2	0.37 to 17.0	Each Secondary 9.0	Track Transf.with Two Main Secondaries and Two Adjusting Windings	Z	2052	4
171840	Ac	W-11	300	60/100	220/110	2	0.37 to 17.0	Each Secondary 9.0	Track Transformer with Two Output Secondaries and Two Adjusting Windings for either 110 V. or 220 V. Input	J	2270	4
199863	Ad	W-10	150	25	115/100	1	0.33 to 12.4	12.0	Track Transformer with One Output Secondary and One Adjusting Winding	H	2879	4
212497	Ae	W-10	300	60/100	115/100	2	Rect.Secondary (.335 to 27.8) Relay Secondary (11.0 to 13.67)	Rect.Secondary 10.5 Relay Secondary 0.2	Line Transformer with a Rectifier Secondary, a Relay Secondary, and Adj. Windings	N	3113	4
212503	Af	W-10	55	60/100	57.5/50	1	0.23 to 10.5	5.0	Track Transformer with a Main Secondary and an Adjusting Winding with Resistor Ref.3a	Q	3124	4
214823	Ag	W-10	240	60/100	460/400	4	Track Secondaries (1.1 to 6.0) Rect.Secondary (1.9 to 25.1) Lighting Sec. (1.1 to 15.0)	Each Track Sec. 8.0 Rect.Secondary 5.0 Lighting Sec. 1.5	Track Transformer with Four Secondary Windings. (Two Track, One Rectifier, and One Lighting Secondaries)	S	3204	2
215540	Ah	W-10	600	60	110	2	Each Adj.Winding (2.74 to 126.5)	Each Adj.Winding 3.5	Auto Transformer with Two Adjusting Windings	V	3223	15
107588	Aj	W-10	90	60	10 D.C.	1	91 to 110	1	Tuned Alternator Output Transformer with Two Primary and Two Condenser Windings. One Output Secondary	M	3188	15
212504	Ak	W-10	57.5	100	13 D.C.	1	57.5	1	Tuned Alternator Output Transformer with One Primary and Two Condenser Windings. One Output Secondary	P	3126	4

11-25-46

TRACK, LINE, AND TUNED ALTERNATOR OUTPUT TRANSFORMERS (cont'd.)

PIECE	REF.	STYLE	V.A.	CYCLES	PRIMARY VOLTAGE	SECONDARIES: NO. OF OUTPUT SECS.	SECONDARIES: SECONDARY VOLTAGES	SECONDARIES: CURRENT CAP. OF SECS. AMPS.	REMARKS	TERM. BOARD DIAGRAM	SPEC.	DWG. C-9228 SH.
213130	Am	W-11	60/110	100	13 D.C.	2	Line Secondary 40.7 to 125 Track Secondary .42 to 15	Line Secondary 1.0 Track Secondary 7.0	Tuned Alternator Output Transf. with Two Output Secondaries and Two Adjusting Windings, Track and Line Secondaries	T	3155	15
215841	An	W-10	100	60	16 D.C.	1	62.5 to 170.0	0.6	Tuned Alternator Output Transf. with One Secondary	K	3242	15
213914	Aw	W-10	220	60/100	115/100	4	Each Secondary 1 to 6	Each Secondary 9.0	Line Transformer With Four Rectifier Secondaries	D	3217	4
175942	Ax	W-10	300	60/100	115/100	2	0.37 to 17.0	Each Secondary 9.0	Track Transformer With Two Output Secondaries and Two Adjusting Windings	Z	2316	4
199754	Ay	W-10	275	60/100	460/400	1	115 to 125	2.25	Line Insulating Transformer	E	2871	2

DECODING TRANSFORMERS

PIECE NUMBER	REF.	STYLE	CYCLES	PRIMARY VOLTAGE	REMARKS	TERMINAL BOARD DIAGRAM VIEW	SPEC.	DWG. C-9228 SH.
187866	Ap	W-10	3	12 D.C.	1 Winding	F	2576	4
188692	Aq	W-10	3	12 D.C.	1 Winding with Resistor Ref.3	Y	2623	4
207175	Ar	W-7	3	12 D.C.	3 Windings	R	3123	11
212921	As	W-7	3	12 D.C.	3 Windings	W	3144	11
213131	At	W-7	1.25/3	12 D.C.	3 Windings	U	3178	11
214393	Au	W-7	3	10 D.C.	2 Windings	G	3193	11
219972	Av	W-7	1.25/3	10 D.C.	3 Windings	U	3341	11
261506	Az	W-10	1.25/3	10 D.C.	Auto.Trans. 1 Winding	B	3783	4
261507	Aaa	W-10	1.25/3	12 D.C.	Auto.Trans. 1 Winding	B	3784	4
231713	Abb	W-7	1.25/3	8 D.C.	3 Windings	U	3476	11
245720	Acc	W-7	1.25/3	8-10-12 D.C.	3 Windings Resistor Ref. 2 mounted per View "AA"	C	3633	11

11-25-46

UNION SWITCH & SIGNAL CO.

PIECE	REF.	DESCRIPTION	DWG. REF.
246196	2	RESISTOR (8-Ohms)	9065-245
132037	3	RESISTOR (2400-Ohms)	9065-227
134550	3a	RESISTOR (10-Ohms)	9065-152
	4	MACHINE SCREW NO.14-24 x 2-1/2 in. Rd.Hd.S. (Tin.Pl.) with 1/4 in. Plain S.Lock Washer (3/32 in. x 1/16 in.) Tin.Pl.,Two Washers Ref.4a and Nut Ref.4b	
79653	4a	WASHER	7826-180
29103	4b	NUT	8109-194
47290	5	CONNECTOR	8064-305
141963	6	CONNECTOR	8064-305
18947	7	BUSHING	B-10270-1

11-25-46

PLATE W-45 A

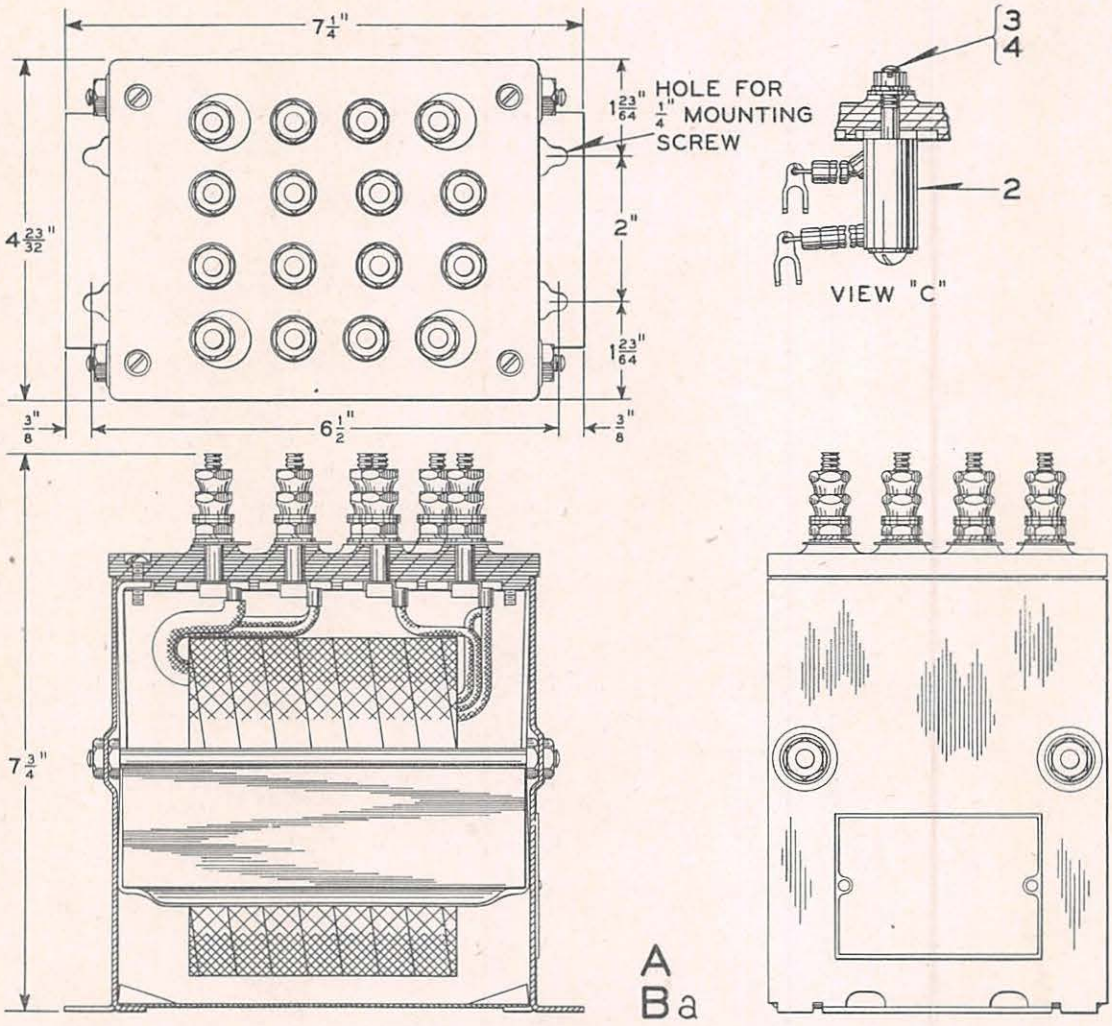

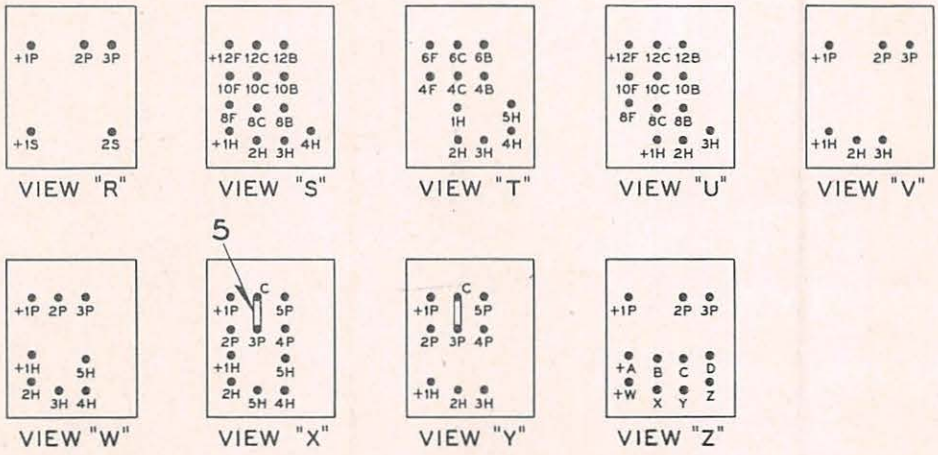

11-25-46 "W-5" & "W-5A" TRANSFORMER

UNION SWITCH & SIGNAL CO.

CODED TRACK CIRCUIT CONTROL SYSTEM

STYLES "W-5" AND "W-5A" TRANSFORMERS

Order by Plate, Piece, Reference and Abbreviated Description

STYLES "W-5" AND "W-5A" TRANSFORMERS

PIECE	REF.	STYLE	CYCLES	PRIMARY VOLTAGE	REMARKS	TERMINAL BD.DIAGRAM	SPEC.	DWG.
107000	A	W-5	60/100	115/100	One main and one adjusting secondary	Z	3157	C-16725-2
220958	Ba	W-5A	1.25/3	10-12DC.	For fast release HR Decoding Trans.	Y	3361	C-16725-2
242673	Bb	W-5A	1.25/3	10-12DC.	Efficient Type Decoding Trans.	X	3595	C-16725-2
242674	Bc	W-5A	1.25/3	8 DC.	Efficient Type Decoding Trans.	W	3596	C-16725-2
231276	Bd	W-5A	1.25/3	8 DC.	For fast release HR Decoding Trans.	V	3460	C-16725-2
245721	Be	W-5A	1.25/3	8-10-12 DC.	For fast release HR Decoding Trans. with 15-Ohm Resistor Ref.2 mounted per View "C"	U	3634	C-16725-2
245973	Bf	W-5A	1-25/3	8-10-12 DC.	Efficient Type Decoding Trans.with 60-Ohm Resistor Ref.2a mounted per View "C"	S	3642	C-16725-2
252514	Bg	W-5A	1.25/3	4-6 DC.	Efficient Type Decoding Trans. with 25-Ohm Resistor Ref.2b mounted per View "C"	T	3700	C-16725-2
239637	Bh	W-5A	100	16DC.	Tuned Alternator Trans.	R	3571	C-16725-2

PIECE	REF.	DESCRIPTION	DWG.REF.
246197	2	RESISTOR (15-Ohms).....	9065-245
248348	2a	RESISTOR (60-Ohms).....	9065-245
253909	2b	RESISTOR (25-Ohms).....	9065-245
	3	SCREW, NO.14-24 x 2-1/2 in. Rd.Hd.S. (Tin Pl.) with 2 Washers Ref.3a, 1/4 in. Pl.S.Lock Washer (3/32 in. x 1/16 in.) (Tin Pl.) and Nut Ref.3b.	
29104	3a	WASHER.....	7828-138

UNION SWITCH & SIGNAL CO.

PIECE	REF.	DESCRIPTION	DWG. REF.
251360	3b	NUT	8109-383
18947	4	BUSHING	B-10270-1
120343	5	CONNECTOR	8064-305

11-25-46

PLATE W-45B

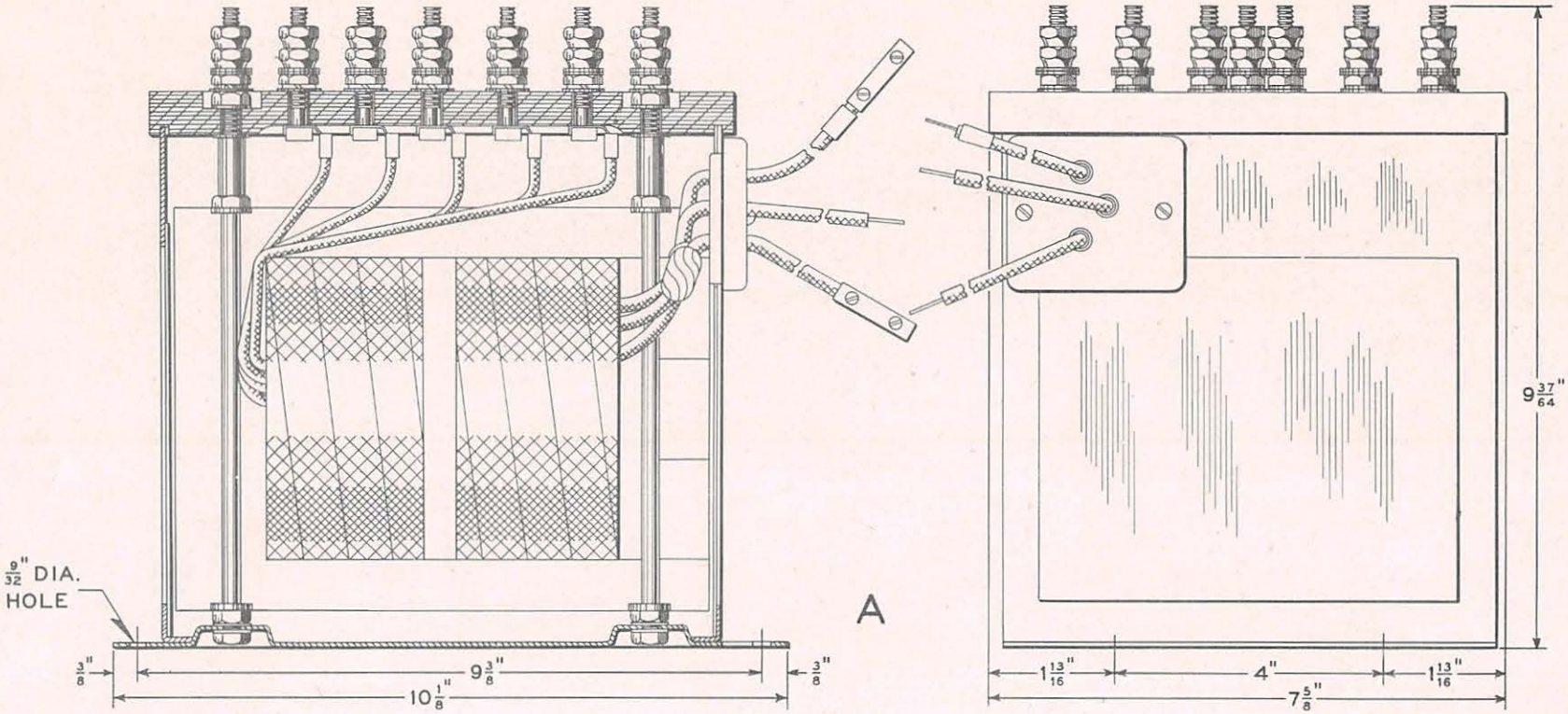

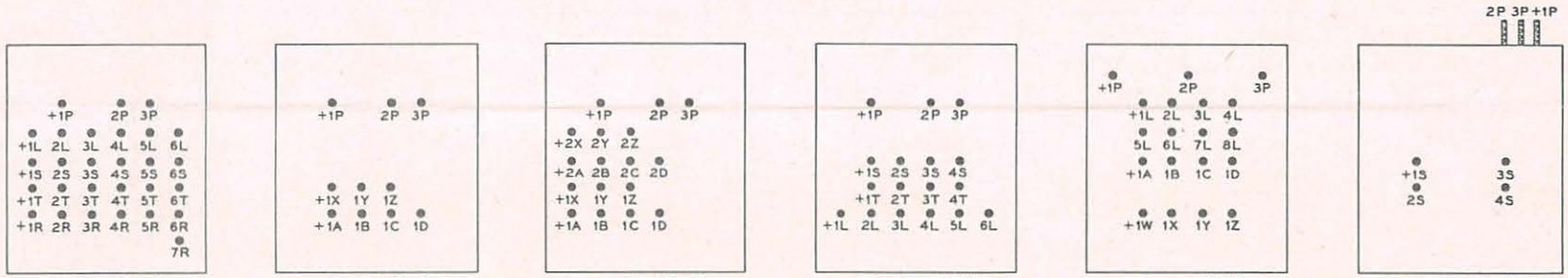

VIEW "U" VIEW "V" VIEW "W" VIEW "X" VIEW "Y" VIEW "Z"

11-25-46

STYLE "W-20" TRANSFORMER

UNION SWITCH & SIGNAL CO.

CODED TRACK CIRCUIT CONTROL SYSTEM

STYLES "W-20" AND "W-22" TRANSFORMERS

Order by Plate, Piece, Reference and Abbreviated Description

PIECE	REF.	DESCRIPTION	DWG. REF.
191583	A	STYLE "W-20" TRANSFORMER COMPLETE, 460/400 Volts, 60/100 Cycles Spec.2688. Top Plate arranged per View "Z" (Primary Leads connected at side of case as shown).....	C-9273-2
220890	Aa	STYLE "W-22" TRANSFORMER COMPLETE, 13 Volts D.C., 100 Cycles, Spec.3354. Top Plate arranged per View "Y" (Primary Leads connected to Top Plate).....	C-9273-4
216569	Ab	STYLE "W-20" TRANSFORMER COMPLETE, 115/100 Volts, 25/100 Cycles Spec.3288. Top Plate arranged per View "X" (Primary Leads connected to Top Plate).....	C-9273-4
168176	Ac	STYLE "W-20" TRANSFORMER COMPLETE, 110/100 Volts, 50/100 Cycles Spec.2211. Top Plate arranged per View "W" (Primary Leads connected to Top Plate).....	C-9273-4
176466	Ad	STYLE "W-20" TRANSFORMER COMPLETE, 110/100 Volts, 60/100 Cycles Spec.2323. Top Plate arranged per View "V" (Primary Leads connected to Top Plate).....	C-9273-4
223870	Ae	STYLE "W-20" TRANSFORMER COMPLETE, 115/100 Volts, 60/100 Cycles Spec.3390. Top Plate arranged per View "U" (Primary Leads connected to Top Plate).....	C-9273-4

11-25-46

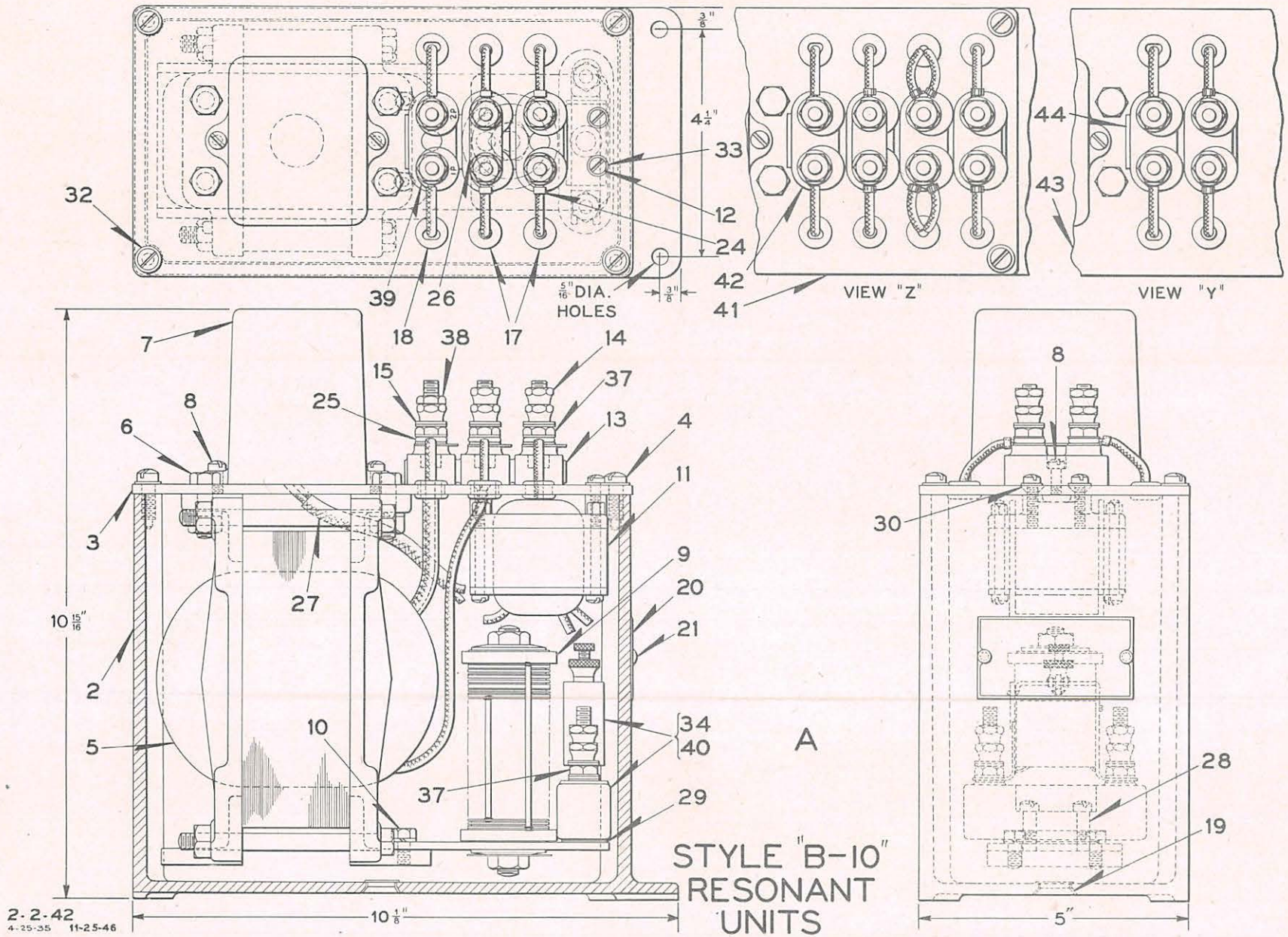
PLATE W-50
32
39
26
18
38
17
5/16" DIA. HOLES
3/8"
4 1/4"
33
12
24
42
41
VIEW "Z"
44
43
VIEW "Y"
7
8
6
3
2
5
10 15/16"
15
25
14
37
13
4
11
9
20
21
27
10
37
34
40
29
A
STYLE "B-10" RESONANT UNITS
10 1/8"
8
30
28
19
5"
2-2-42
4-25-35 11-25-46

UNION SWITCH & SIGNAL CO.

CODED TRACK CIRCUIT CONTROL SYSTEM

STYLE "B-10" RESONANT UNIT

Order by Plate, Piece, Reference and Abbreviated Description

PIECE	REF.	DESCRIPTION	DWG. REF.
188696	A	STYLE "B-10" RESONANT UNIT COMPLETE as shown. Tuned for 100 Cycle Operation	C-9464-1
225425	Aa	STYLE "B-10" RESONANT UNIT COMPLETE as shown. Tuned for 103 Cycle Operation	C-9464-1
207140	Ab	STYLE "B-10" RESONANT UNIT COMPLETE per View "Z". Tuned for 100 Cycle Operation	C-9464-1
211341	Ac	STYLE "B-10" RESONANT UNIT COMPLETE per View "Y". Tuned for 100 Cycle Operation	C-9464-1
188829	2	CASE	C-9463-1
188845	3	TOP PLATE for Refs.A and Aa	C-9463-2
	4	MACHINE SCREW, NO.14-24 x 5/8 in. Fil.Hd.S. (Tin Pl.)	
189135	5	TRANSFORMER COMPLETE for Refs.A, Aa and Ab	C-8021-67
211336	5a	TRANSFORMER COMPLETE for Ref.Ac	C-8021-67
	6	CAP SCREW, 5/16 in.-18 x 1 in. Hex.Hd.S. (Cad.Pl.) with 5/16 in. Pl.S. Lock Washer (5/32 in. x 3/32 in.) (Cad.Pl.) and 5/16 in.-18 Hex.S.Nut (Cad.Pl.)	
189138	7	CONDENSER COMPLETE with two Leads (0.6 Mfd.) for Refs.A, Aa and Ab	B-12549-29
211337	7a	CONDENSER COMPLETE with four Leads (.06 Mfd.) for Ref.Ac	B-12549-29
	8	MACHINE SCREW, NO.10-32 x 1/2 in. Fil.Hd.S. (Tin Pl.)	
188834	9	RECTIFIER COMPLETE for Refs.A, Aa, Ab and Ac	12558-27
	10	TAP BOLT, 1/4 in.-20 x 1/2 in. Hex.Hd.S. (Tin Pl.)	
	10a	LOCK WASHER, 1/4 in. Pl.S. (9/64 in. x 5/64 in.) (Tin Pl.)	
189133	11	FILTER REACTOR COMPLETE for Refs.A, Aa and Ab	C-8025-17
211339	11a	FILTER REACTOR COMPLETE for Ref.Ac	C-8025-17
	12	MACHINE SCREW, NO.10-32 x 5/8 in. Fil.Hd.S. (Tin Pl.)	
	13	TERMINAL BOARD COMPLETE (Three-Way) with Nuts and Washers for Refs.A and Aa (Inc.1-13a, 10-14, 22-15, 6-37, 2-38 and Six 1/4 in. Lock Washers (3/32 in. x 1/16 in.) (Tin Pl.)	9968-

UNION SWITCH & SIGNAL CO.

PIECE	REF.	DESCRIPTION	DWG. REF.
181830	13a	TERMINAL BOARD (Three-Way) without Nuts and Washers	9968-1100
29101	14	NUT	8109-193
29102	15	WASHER	7828-139
139691	17	BUSHING	8095-644
165822	18	BUSHING	8095-683
34340	19	VENTILATOR	7318-119
188846	20	NAME PLATE	8225-465
	21	DRIVE SCREW, NO.4 x 1/4 in. Rd.Hd.Hardened (Tin Pl.)	
68929	24	WIRE TERMINAL	8064-471
67335	25	WIRE TERMINAL	8064-299
56224	26	CONNECTOR	8064-348
	27	LINEN TUBING, 1/4 in. I.D. x 5/16 in. O.D. 3 in. long Black Varnished	
	28	MACHINE SCREW, NO.14-24 x 3/4 in. Fil.Hd.S. (Tin Pl.)	
121356	29	GASKET	8078-1372
	30	MACHINE SCREW, NO.10-32 x 5/8 in. Flat Hd.S. (Tin Pl.)	
36073	32	WASHER	7828-161
44618	33	WASHER	7828-184
	34	RESISTANCE UNIT COMPLETE with Terminal Block	9065-
149880	34a	RESISTANCE UNIT (Without Terminal Block), (0.75 Amp.Capacity, 10-Ohms total resistance, adjusting in steps of 0.38)	9065-186
127260	37	NUT	8109-194
410047	38	NUT	
142777	39	TAG (Orders should specify marking desired)	8988-75
	40	TERMINAL BLOCK with Nuts and Washers (Inc.1-40a, 4-14, 8-15, 2-37 and Two 1/4 in. Pl.S.Lock Washers (3/32 in. x 1/16 in.)(Tin Pl.)	9968-1030
170363	40a	TERMINAL BLOCK with Terminal Posts (Without Nuts and Washers)	9968-1030
207139	41	TOP PLATE for Ref.Ab	C-9436-2
	42	TERMINAL BOARD COMPLETE (Four-Way) with Nuts and Washers for Ref.Ab (Inc.1-42a, 14-14, 30-15, 8-37, 2-38 and Eight 1/4 in. Pl.S.Lock Washers (3/32 in. x 1/16 in.) (Tin Pl.)	9968-
181829	42a	TERMINAL BOARD (Four-Way) Without Nuts and Washers	9968-1100
211340	43	TOP PLATE for Ref.Ac	C-9463-2
	44	TERMINAL BOARD COMPLETE (Two-Way) with Nuts and Washers for Ref.Ac (Inc.1-44a, 8-14, 16-15, 4-37, 2-38 and Four 1/4 in. Pl.S.Lock Washers (3/32 in. x 1/16 in.) (Tin Pl.)	9968-
181831	44a	TERMINAL BOARD (Two-Way) Without Nuts and Washers	9968-1100

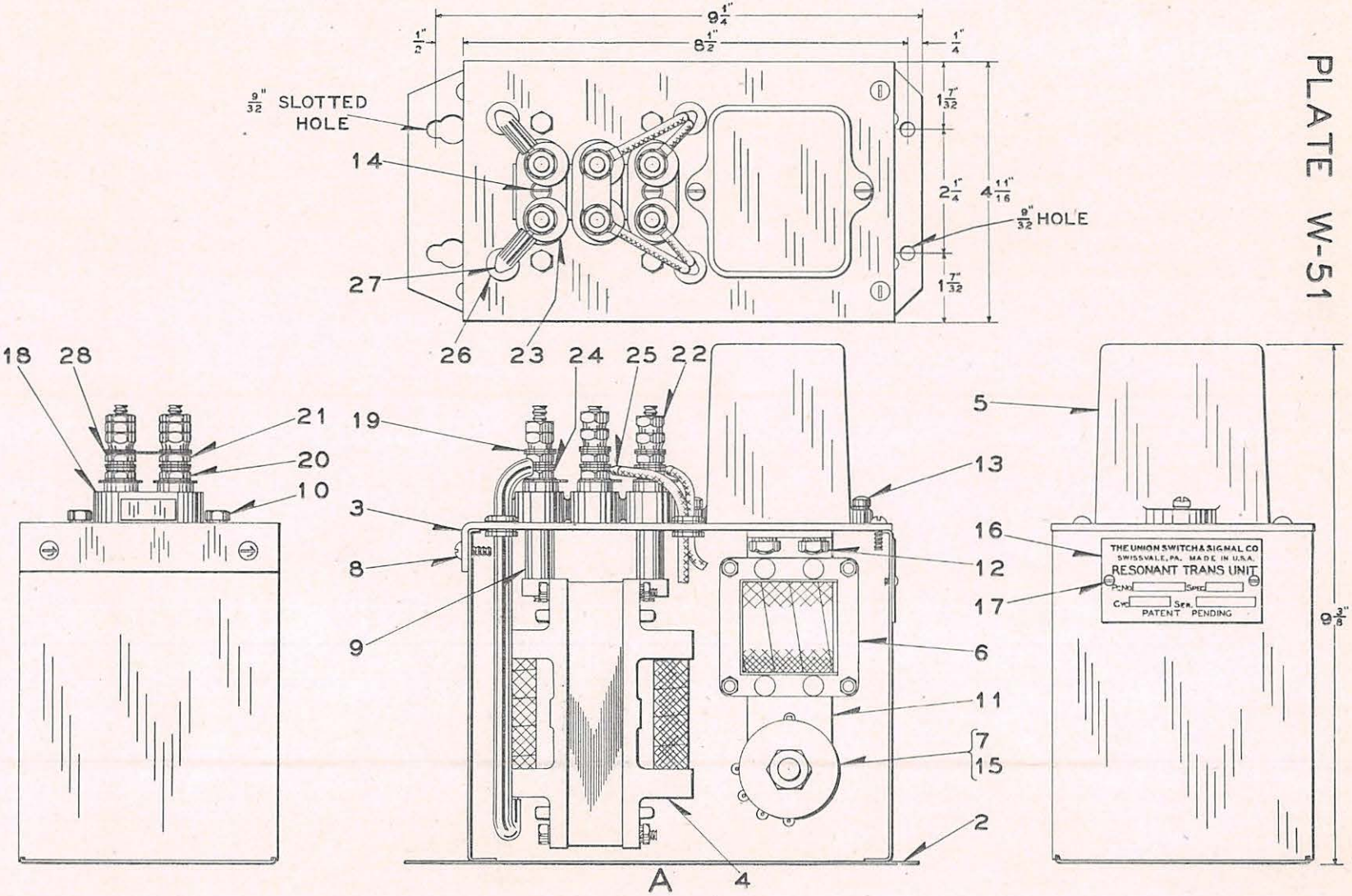

11-25-46

60 CYCLE RESONANT UNIT

PLATE W-51

UNION SWITCH & SIGNAL CO.

CODED TRACK CIRCUIT CONTROL SYSTEM

60 CYCLE RESONANT UNIT

Order by Plate, Piece, Reference and Abbreviated Description

PIECE	REF.	DESCRIPTION	DWG. REF.
246966	A	60 CYCLE RESONANT UNIT	C-9464-13
243593	2	CASE	C-16745-17
249863	3	TOP PLATE	C-9463-5
249855	4	TRANSFORMER COMPLETE	C-8021-68
189138	5	CONDENSER (.60 MFD.)	B-12549-29
249856	6	REACTOR COMPLETE	C-8025-40
249857	7	RECTIFIER COMPLETE	C-9134-46
	8	SCREW, NO.8-1/2 in. Rd.Hd.Hardened (Tin Pl.)	
249862	9	SEPARATOR	8072-889
	10	SCREW Ref.10a with No.12 Plain S.Lock Washer (1/16 in. x 3/64 in.) Tin Pl.	
249861	10a	SCREW ONLY, for Ref.10	8098-921
249860	11	BRACKET	10914-1708
	12	MACHINE SCREW, NO.14-24 x 5/8 in. Flat Hd.S. (Tin Pl.) with 1/4 in. Plain S.Lock Washer (3/32 in. x 1/16 in.) Tin Pl. and Nut Ref.12a	
33217	12a	NUT for Ref.12	8265-114
	13	MACHINE SCREW, NO.10-32 x 1/2 in. Fil.Hd.S. (Tin Pl.) with No.10 Plain S.Lock Washer (1/16 in. x 3/64 in.) (Tin Pl.)	
	14	MACHINE SCREW, NO.10-32 x 1/2 in. Fil.Hd.S. (Tin Pl.)	
	15	HEX.JAM NUT, Std.3/8 in. S. (Cad.Pl.) with 3/8 in. Lock Washer (Internal Teeth) Cad.Pl. (Not shown. Used for fastening Rectifier Ref.7 to Bracket Ref.11)	
188846	16	NAME PLATE	8225-465
	17	DRIVE SCREW, NO.2 x 3/16 in. Rd.Hd. (Tin Pl.)	
	18	TERMINAL BOARD COMPLETE (3-Way) with Nuts and Washers (Inc. 1-18a, 24-19, 8-20, 6-21 and 10-22	
181830	18a	TERMINAL BOARD (3-Way) without Nuts and Washers	9968-1100

UNION SWITCH & SIGNAL CO.

PIECE	REF.	DESCRIPTION	DWG. REF.
29102	19	WASHER	7828-139
127260	20	NUT	8109-194
29103	21	NUT	8109-194
29101	22	NUT	8109-193
142777	23	TAG (Orders should specify marking desired)	8988-75
67335	24	EYELET	8064-299
68929	25	TERMINAL	8064-471
165822	26	BUSHING	8095-683
	27	LINEN TUBING, .263 in. I.D. x .301 in. O.D. Black Varnished 9-1/2 in. long	
	27a	LINEN TUBING, .263 in. I.D. x .301 in. O.D. Black Varnished 3-1/2 in. long	
56224	28	CONNECTOR	8064-348

PLATE W-53

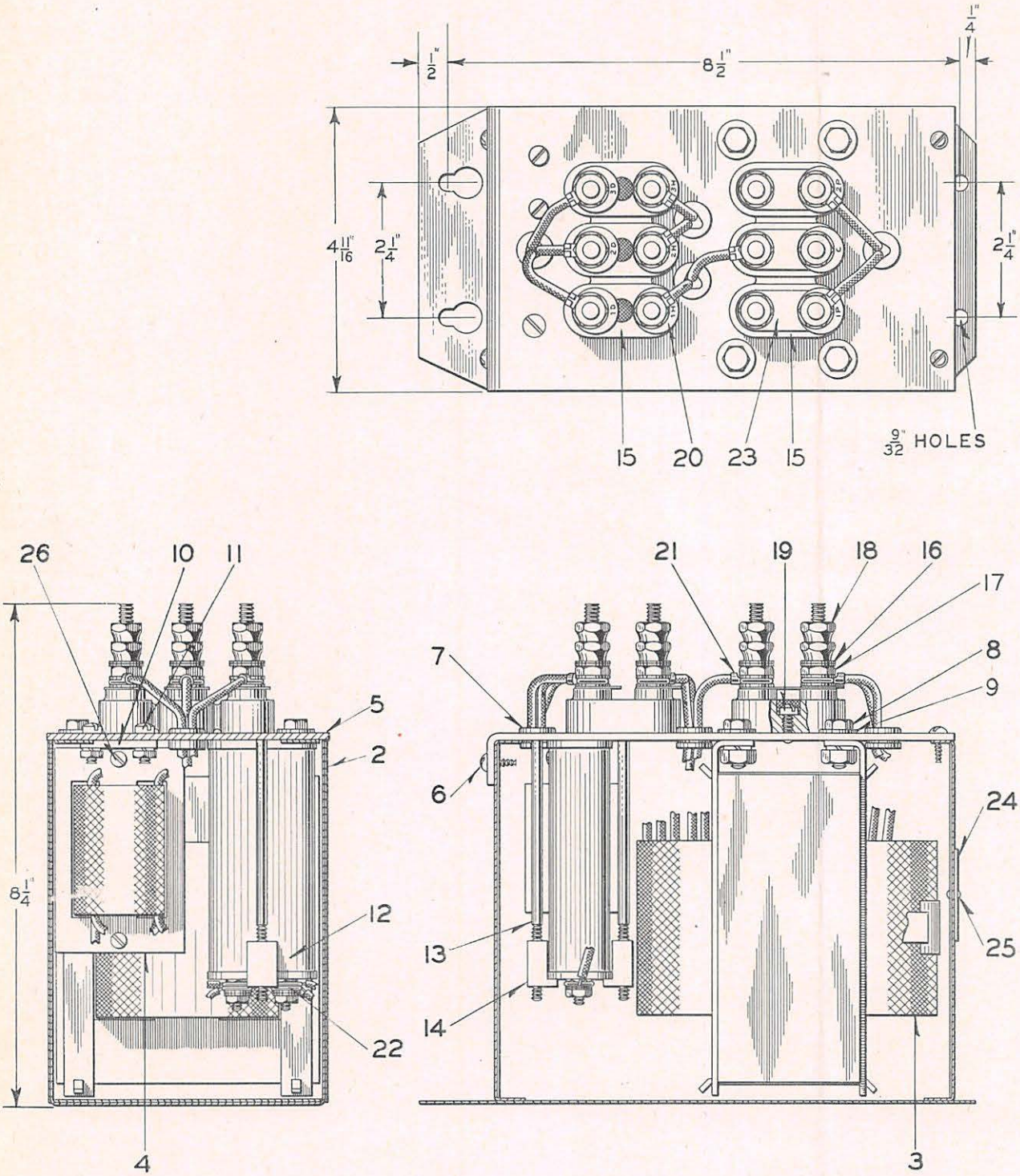

A

DECODING UNIT

9-9-40

UNION SWITCH & SIGNAL CO.

CODED TRACK CIRCUIT CONTROL SYSTEM

DECODING UNIT

Order by Plate, Piece, Reference and Abbreviated Description Given in Heavy Face Type Only

PIECE	REF.	DESCRIPTION	DWG. REF.
210441	A	DECODING UNIT COMPLETE	C-9454-9
188752	2	CASE COMPLETE	C-9227-1
103969	3	TRANSFORMER COMPLETE 12 Volts 3 Cycles	C-9227-25
210551	4	TRANSFORMER COMPLETE 12 Volts 3 Cycles	C-8605-28
104020	5	TOP PLATE	C-9455-7
	6	SCREW NO.8 x 1/2" Rd.Hd. (Tin Pl.)	
165822	7	RUBBER BUSHING	8095-683
	8	CAP SCREW, 1/4"-20 x 5/8" Hex.Hd.S. (Tin Pl.) with 1/4" Plain S.Lock Washer (3/32" x 1/16") (Tin Pl.) 1/4" Hex.Nut (Tin Pl.) and Washer Ref.9	
38149	9	WASHER	7826-98
104021	10	BRACKET	10914-927
	11	MACHINE SCREW, NO.10-30 x 1/2" Fil.Hd.S. (Tin Pl.) with No.10 Plain S.Lock Washer (1/16" x 3/64") (Tin Pl.) and Hex.Nut (Tin Pl.)	
183018	12	CONDENSER (2MF) COMPLETE with leads	B-12549-21
210591	13	SCREW	8098-562
103229	14	CONDENSER CLAMP NUT	8265-355
	15	TERMINAL BLOCK (3-WAY) with Nuts and Washers (Inc.1-15a, 24-16, 6-17 and 12-18)	9968-1100
181830	15a	TERMINAL BLOCK (3-WAY) with Terminal Posts (Without Nuts and Washers)	9968-1100
29102	16	WASHER	7828-139
127260	17	NUT	8109-194
29101	18	NUT	8109-193
	19	MACHINE SCREW, NO.10-30 x 7/16" Fil.Hd.S. (Tin Pl.)	
142777	20	TAG (Orders should specify marking desired)	8988-75
68929	21	WIRE TERMINAL	8064-471
45304	22	WIRE TERMINAL	8064-299
47290	23	TERMINAL CONNECTOR	8064-305
187914	24	NAME PLATE	8225-464
54920	25	RIVET	10301-1
	26	MACHINE SCREW, NO.8-36 x 7/8" Fil.Hd.S. (Tin Pl.) with Hex.Nut (Tin Pl.)	

PLATE W-54

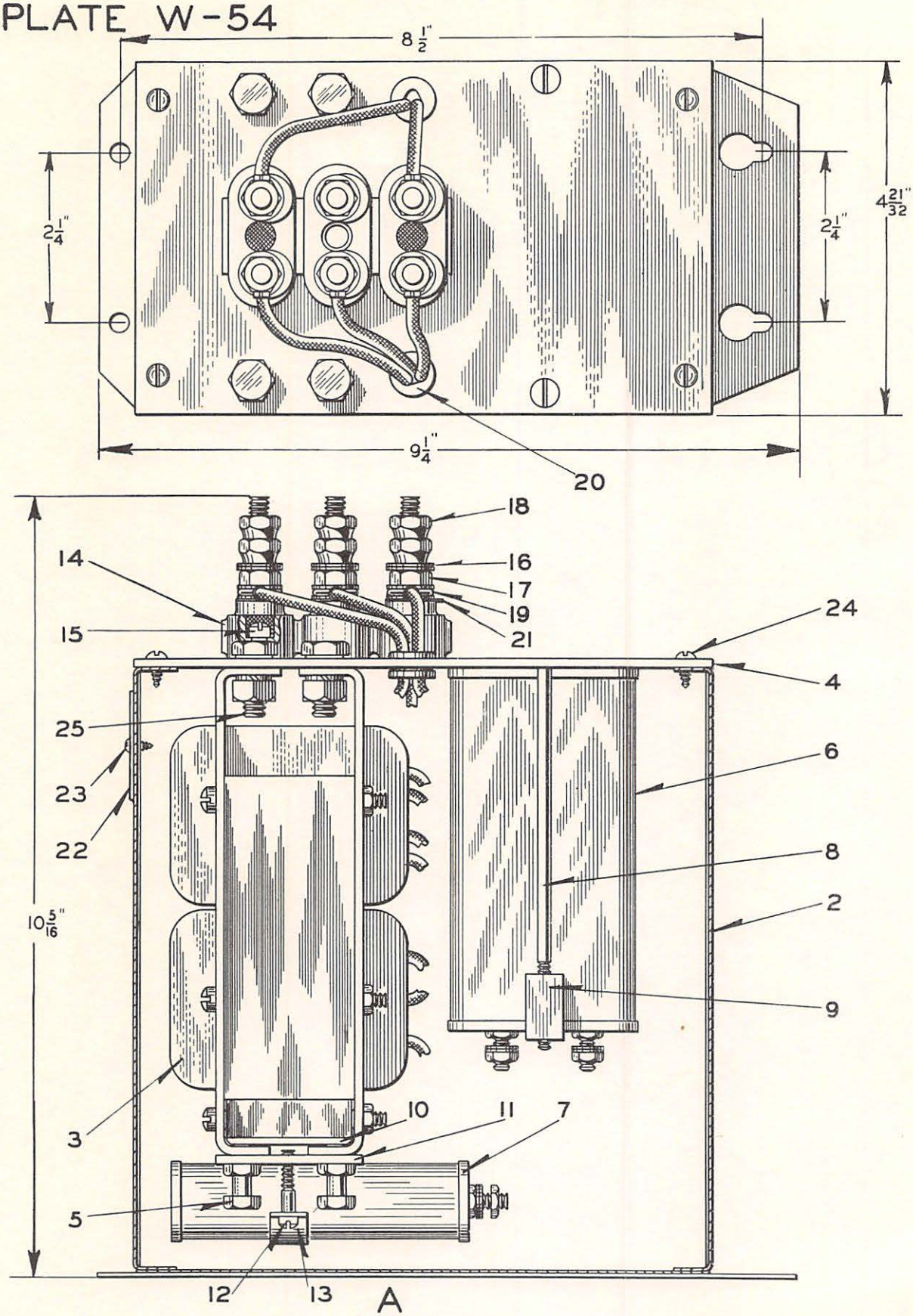

A

CODE DETECTING UNIT

2-2-42
9-9-40

UNION SWITCH & SIGNAL CO.

CODED TRACK CIRCUIT CONTROL SYSTEM

CODE DETECTING UNIT

Order by Plate, Piece, Reference and Abbreviated Description Given in Heavy Face Type Only

PIECE	REF.	DESCRIPTION	DWG. REF.
207642	A	CODE DETECTING UNIT	C-9454-8
208874	2	COVER COMPLETE	C-9455-4
102508	3	TRANSFORMER COMPLETE 12 Volts 3 Cycles	C-8155-28
102498	4	TOP PLATE	C-9455-7
	5	TAP BOLT 1/4"-20 x 3/4" Hex.Hd.S. (Tin Pl.) with Hex.Nut (Tin Pl.)	
102507	6	CONDENSER (14 MFD.) COMPLETE	B-12549-35
199468	7	CONDENSER (2 MF.) COMPLETE	B-12549-21
209863	8	SCREW	8098-562
103229	9	CONDENSER CLAMP NUT	8265-355
103026	10	PLATE	9999-1359
102501	11	PLATE	9999-1354
	12	MACHINE SCREW, NO.8-36 x 7/8" Fil.Hd.S. (Tin Pl.)	
187919	13	CONDENSER STRAP	10914-614
	14	TERMINAL BLOCK (3-WAY) with Nuts and Washer (Inc.24-16, 6-17, and 12-18)	9968-1100
181830	14a	TERMINAL BLOCK (3-WAY) with Terminal Posts (without Nuts and Washers)	9968-1100
	15	MACHINE SCREW, NO.10-30 x 7/16" Fil.Hd.S. (Tin Pl.)	
29102	16	WASHER	7828-139
127260	17	NUT	8109-194
29101	18	NUT	8109-193
68929	19	WIRE TERMINAL	8064-471
135822	20	BUSHING	8095-683
142777	21	TAG (Orders should specify marking desired)	8988-75
102509	22	NAME PLATE	8225-509
	23	SCREW, NO.2 x 5/16" Rd.Hd.Hardened (Tin Pl.)	
	24	SHEET METAL SCREW, NO.8 x 1/2" Rd.Hd. (Tin Pl.)	
	25	TAP BOLT, 5/16"-18 x 3/4"(Cad.Pl.) with 5/16" Pl.S.Lock Washer (1/8" x 1/16") (Cad.Pl.), 5/16" x 18" Hex.Nut (Cad.Pl.) and Washer Ref.25a	
29256	25a	WASHER	7828-141

2-2-42

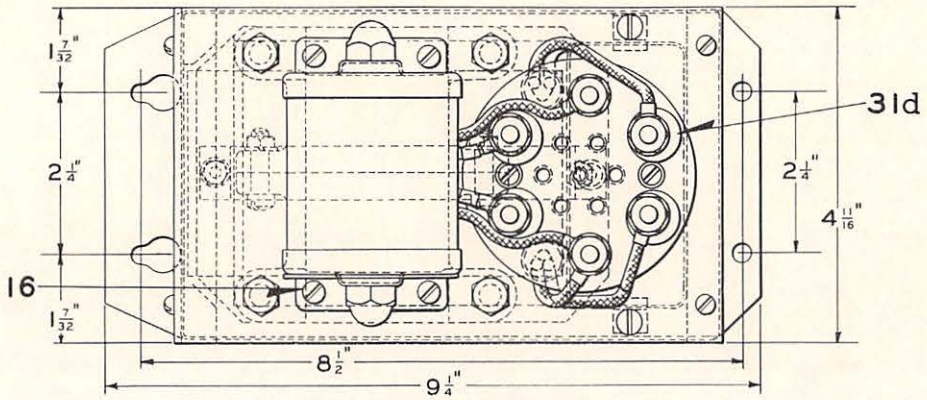

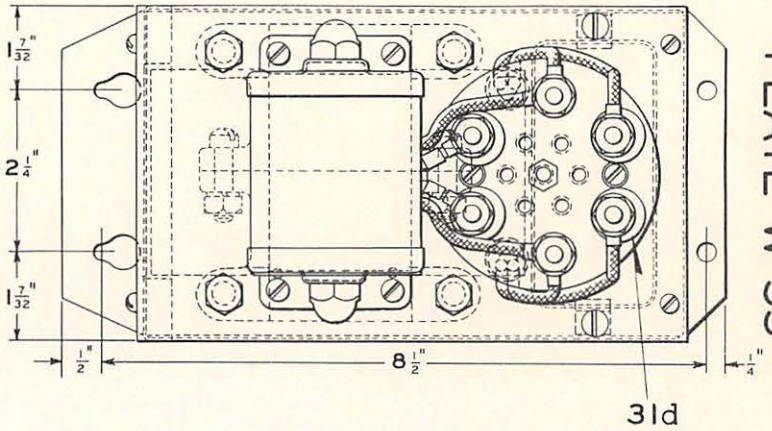

PLATE W-55

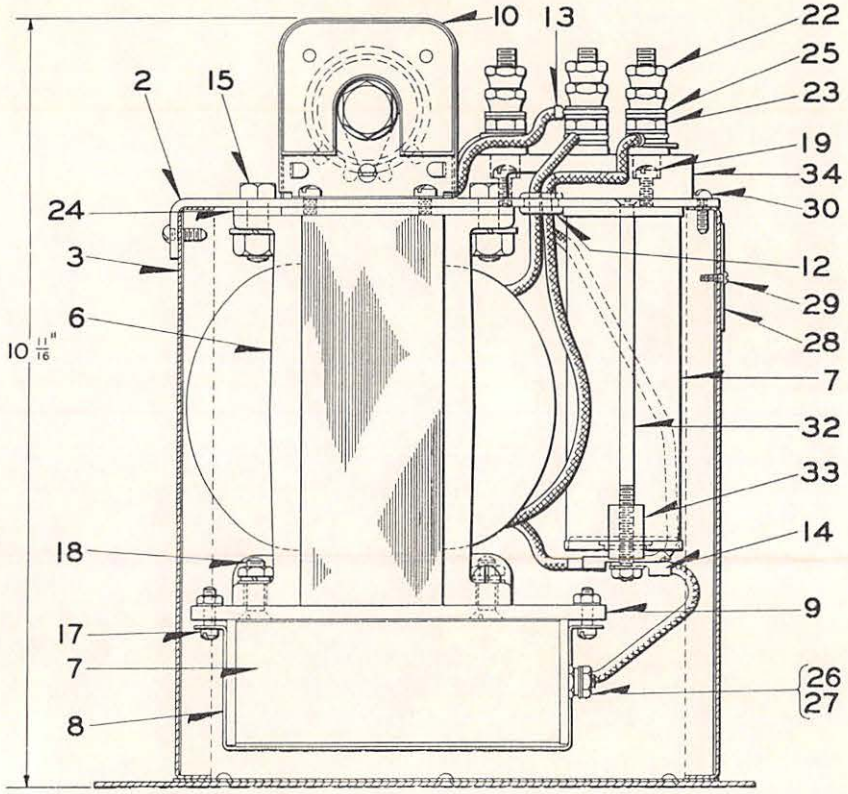

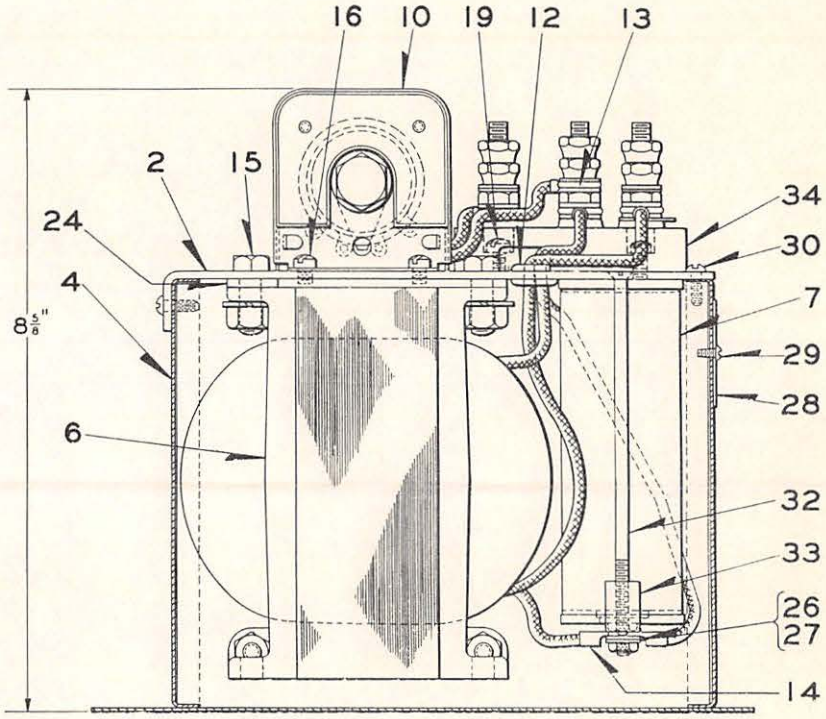

4-25-35 2-2-42 B STYLE "Y-10" & "Y-20" DECODING UNITS A

UNION SWITCH & SIGNAL CO.

CODED TRACK CIRCUIT CONTROL SYSTEM

DECODING UNITS

Plug Couplers for Decoding Units will be found on Plate W-75A.

Order by Plate, Piece, Reference and Abbreviated Description Given in Heavy Face Type Only

PIECE	REF.	DESCRIPTION	DWG. REF.
188694	A	STYLE "Y-10" CLEAR DECODING UNIT (180-Code).....	C-9454-5
228258	Aa	STYLE "Y-10" ADVANCE-APPROACH DECODING UNIT (75M Code).....	C-9454-5
188697	B	STYLE "Y-20" APPROACH LIGHTING DECODING UNIT (120-Code).....	C-9454-6
188750	2	TOP PLATE ONLY, for Refs.A, Aa and B.....	C-9455-2
188815	3	COVER, for Ref.B.....	C-9455-4
221726	4	COVER, for Refs.A and Aa.....	C-9227-1
159834	6	TRANSFORMER (3-Cycles) for Refs.A and B.....	C-8021-61
228402	6a	TRANSFORMER for Ref.Aa.....	C-8021-61
186766	7	CONDENSER (7 MFD) COMPLETE with leads.....	B-12549-22
185019	8	CONDENSER CLAMP COMPLETE.....	11893-705
188840	9	INSULATION.....	8750-2657
189090	10	STYLE "RN-13" RECTIFIER, for Refs.A and B.....	C-9135-83
228383	10a	STYLE "RN-13" RECTIFIER, for Ref.Aa.....	C-9135-83
	11	TERMINAL BLOCK (3-Way) COMPLETE, with Terminal Posts, Nuts and Washers (Used previous to 9-23-40) Not shown.....	9968-1100
181830	11a	TERMINAL BLOCK (3-Way) COMPLETE, with Terminal Posts (Without Nuts and Washers) for Ref.11.....	9968-1100
165822	12	BUSHING (Rubber).....	8095-683
68929	13	WIRE TERMINAL.....	8064-471
108285	14	WIRE TERMINAL.....	8244-40
	15	TAP BOLT 5/16"-18 x 1" Hex.Hd.S.with 5/16" Hex.Nut and 5/16" Plain S.Lock Washer (1/8" x 1/16") (Cad.Pl.) for fastening Refs.5 and 6 to Top Plate	
	16	MACHINE SCREW NO.10-30 x 1/4" Fil.Hd.S. (Tin Pl.) for fastening Ref.10 to Top Plate	
	17	MACHINE SCREW NO.8-36 x 9/16" Fil.Hd.S. (Tin Pl.) with No.8-36 Nut (Tin Pl.) and Washer Ref.17a (Cad.Pl.) for fastening Ref.8 to Insulation.	
152389	17a	WASHER for Ref.17.....	7826-249
	18	MACHINE SCREW NO.14-24 x 7/8" Flat Hd.S. (Tin Pl.) with 1/4" Plain S.Lock Washer (1/16" x 1/16") (Tin Pl.) Washer Ref.18a and Nut Ref.18b for fastening Ref.9 to Ref.6	
52178	18a	WASHER for Ref.18.....	7826-117
93420	18b	NUT for Ref.18.....	8265-128

UNION SWITCH & SIGNAL CO.

PIECE	REF.	DESCRIPTION	DWG. REF.
	19	MACHINE SCREW NO.10-30 x 7/16" Fil.Hd.S. (Tin Pl.) for fastening Refs.11 or 34 to Top Plate	
189700	20	SCREW NO.8-36 x 5-3/8" with Nut Ref.21 for attaching Ref.7 to Top Plate (Used previous to 9-30-37) Not shown.....	8098-1276
189701	21	NUT for Ref.20 (Not shown).....	8109-479
29101	22	NUT.....	8109-193
127260	23	NUT.....	8109-194
65762	24	WASHER.....	7826-180
29102	25	WASHER.....	7828-139
821	26	WASHER for Ref.7.....	7828-4
	27	SHAKEPROOF LOCK WASHER, NO.12 (Internal Teeth) (Tin Pl.) for Ref.7	
187914	28	NAME PLATE.....	8225-464
	29	SCREW, NO.2 x 5/16" Rd.Hd. Hardened (Tin Pl.)	
	30	NO.8 x 1/2" RD.HD.HARDENED DRIVE SCREW (Tin Pl.) for fastening Ref.2 to Cover	
142777	31d	TAG (Orders should specify marking desired).....	8988-75
209863	32	SCREW.....	8098-562
103229	33	CONDENSER CLAMP NUT.....	8265-355
216611	34	SIX WAY TERMINAL BLOCK (Without Nuts and Washers).....	9968-1269

2-2-42

PLATE W-57

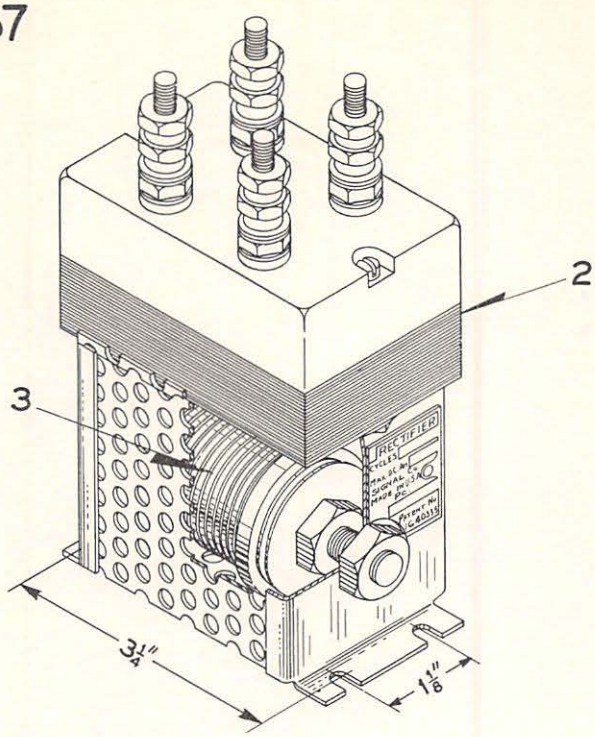

LENGTH $3\frac{5}{8}''$
WIDTH $2\frac{1}{4}''$
HEIGHT $6\frac{1}{32}''$

A

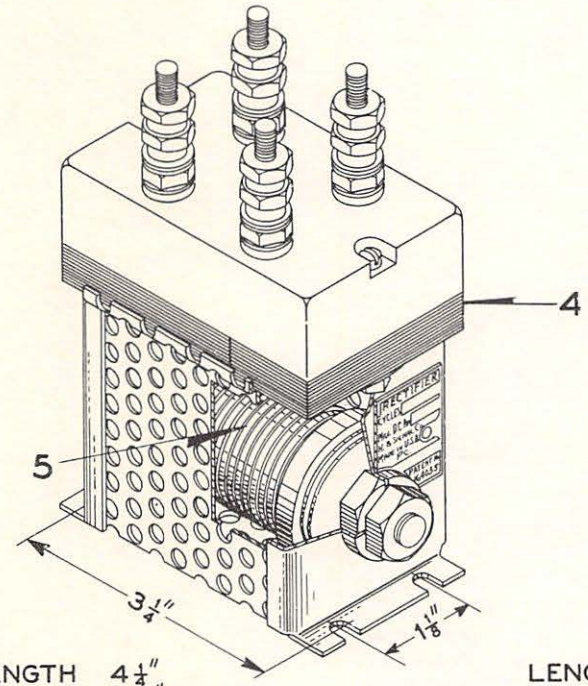

LENGTH $4\frac{1}{4}''$
WIDTH $2\frac{17}{64}''$
HEIGHT $5\frac{17}{32}''$

B

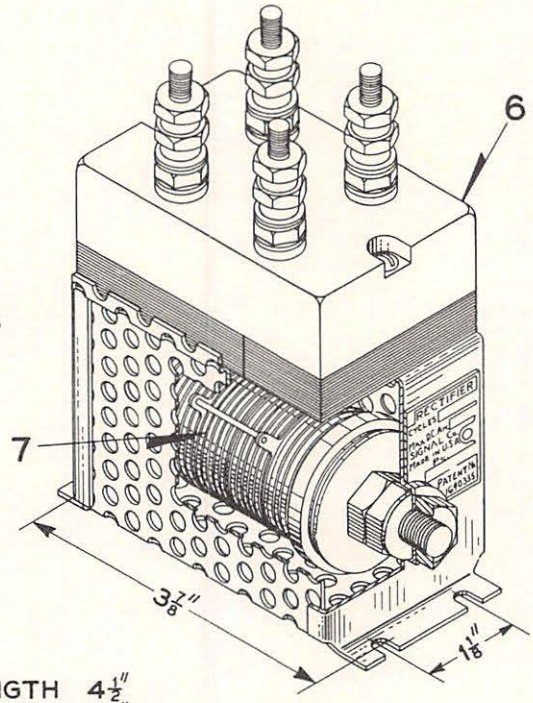

LENGTH $4\frac{1}{2}''$
WIDTH $2\frac{1}{4}''$
HEIGHT $\begin{cases} 5\frac{21}{32}'' \text{ FOR C.} \\ 5\frac{31}{32}'' \text{ FOR CA.} \end{cases}$

C

STYLES "RQ-5" AND "RQ-8" RECTIFIERS

9-9-40

UNION SWITCH & SIGNAL CO.

CODED TRACK CIRCUIT CONTROL SYSTEM

STYLES "RQ-5" AND "RQ-8" RECTIFIERS

Order by Plate, Piece, Reference and Abbreviated Description Given in Heavy Face Type Only

STYLE "RQ- " RECTIFIER									
				D.C.OUTPUT		A.C.INPUT			
PIECE	REF.	STYLE	SPEC.	VOLTS MAX.	AMPERES MAX.	VOLTS	CYCLES	REMARKS	DWG.REF.
196068	A	RQ-5	2088	12.0	0.10	110	25/100		C-9135-42
181324	Aa	RQ-5	2391	10	.06	110	25/100		C-9135-42
189784	Ab	RQ-5	2657	1.2	0.30	2.0	25/100		C-9135-42
208458	B	RQ-8	3028	2.50	0.125	0.45	25		C-9135-110
212502	C	RQ-8	3028	2.50	0.125	0.78	100		C-9135-110
212635	Ca	RQ-8	3028	4.0	0.200	1.44	60		C-9135-110

PIECE	REF.	DESCRIPTION	DWG.REF.
196067	2	TRANSFORMER for Ref.A.....	C-8605-28
181325	2a	TRANSFORMER for Ref.Aa.....	C-8605-28
189783	2b	TRANSFORMER for Ref.Ab.....	C-8605-28
184552	3	RECTIFIER STACK COMPLETE for Ref.A.....	C-9134-29
160928	3a	RECTIFIER STACK COMPLETE for Ref.Aa.....	C-9134-29
189781	3b	RECTIFIER STACK COMPLETE for Ref.Ab.....	C-9134-29
102537	4	TRANSFORMER COMPLETE for Ref.B.....	C-8605-34
208805	5	RECTIFIER STACK COMPLETE for Ref.B.....	C-9134-46
108542	6	TRANSFORMER COMPLETE for Ref.C.....	C-8605-34
213385	6a	TRANSFORMER COMPLETE for Ref.Ca.....	C-8605-28
213401	7	RECTIFIER STACK COMPLETE for Refs.C and Ca.....	C-9134-46

2-2-42

PLATE W-58

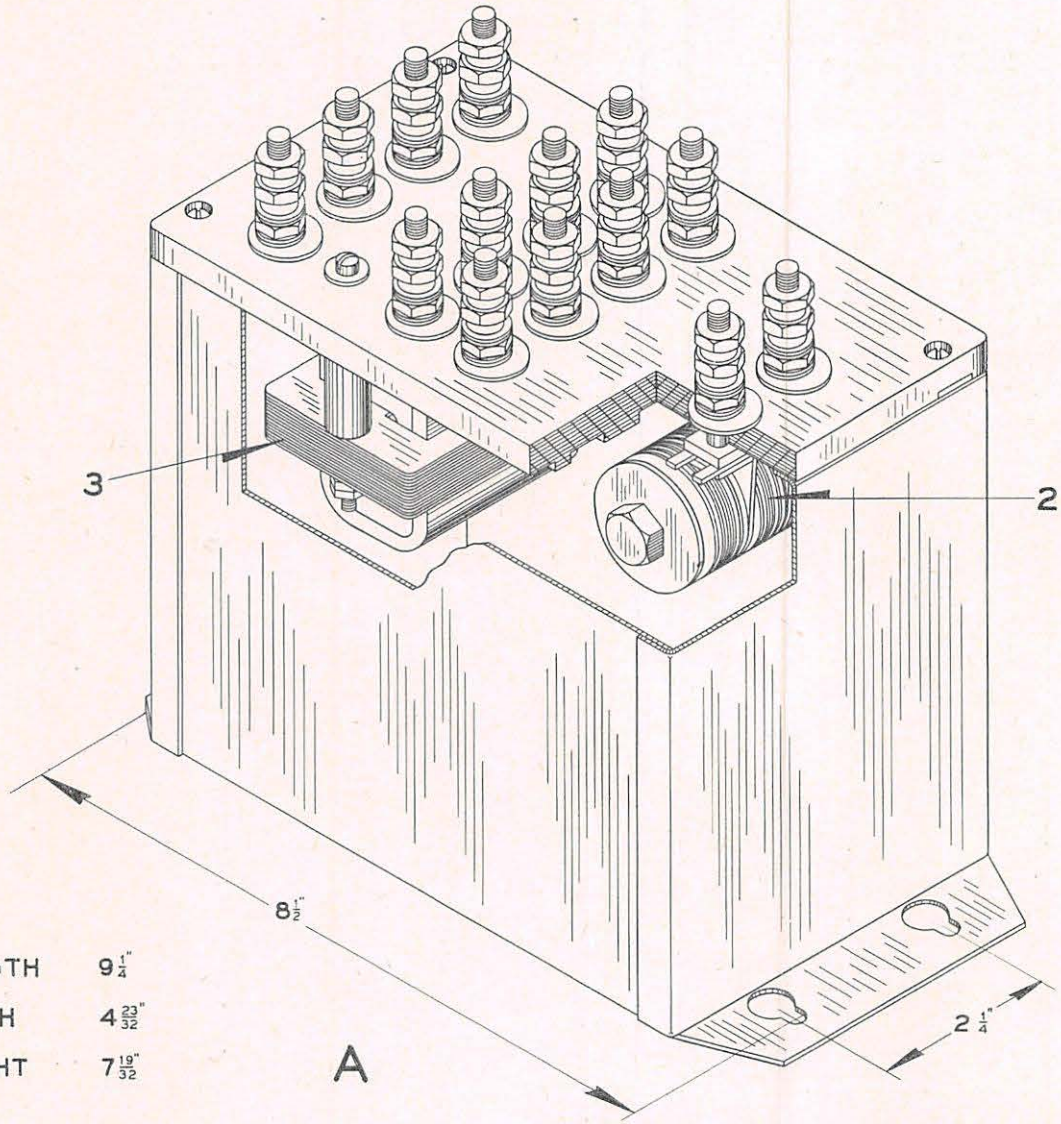

LENGTH	9 1/4"
WIDTH	4 23/32"
HEIGHT	7 19/32"

A

STYLE "RQ-9" RECTIFIER

9-9-40

UNION SWITCH & SIGNAL CO.

CODED TRACK CIRCUIT CONTROL SYSTEM

STYLE "RQ-9" RECTIFIER

Order by Plate, Piece, Reference and Abbreviated Description Given in Heavy Face Type Only

STYLE "RQ-9" RECTIFIER								
			D.C.OUTPUT		A.C.INPUT			
PIECE	REF.	SPEC.	VOLTS MAX.	AMPERES MAX.	VOLTS	CYCLES	REMARKS	DWG.REF.
215559	A	3226	5	0.10	1.55	60		C-9135-127

PIECE	REF.	DESCRIPTION	DWG.REF.
108367	2	RECTIFIER UNIT COMPLETE.....	12558-43
108368	3	TRANSFORMER COMPLETE.....	C-8605-37

PLATE W-59

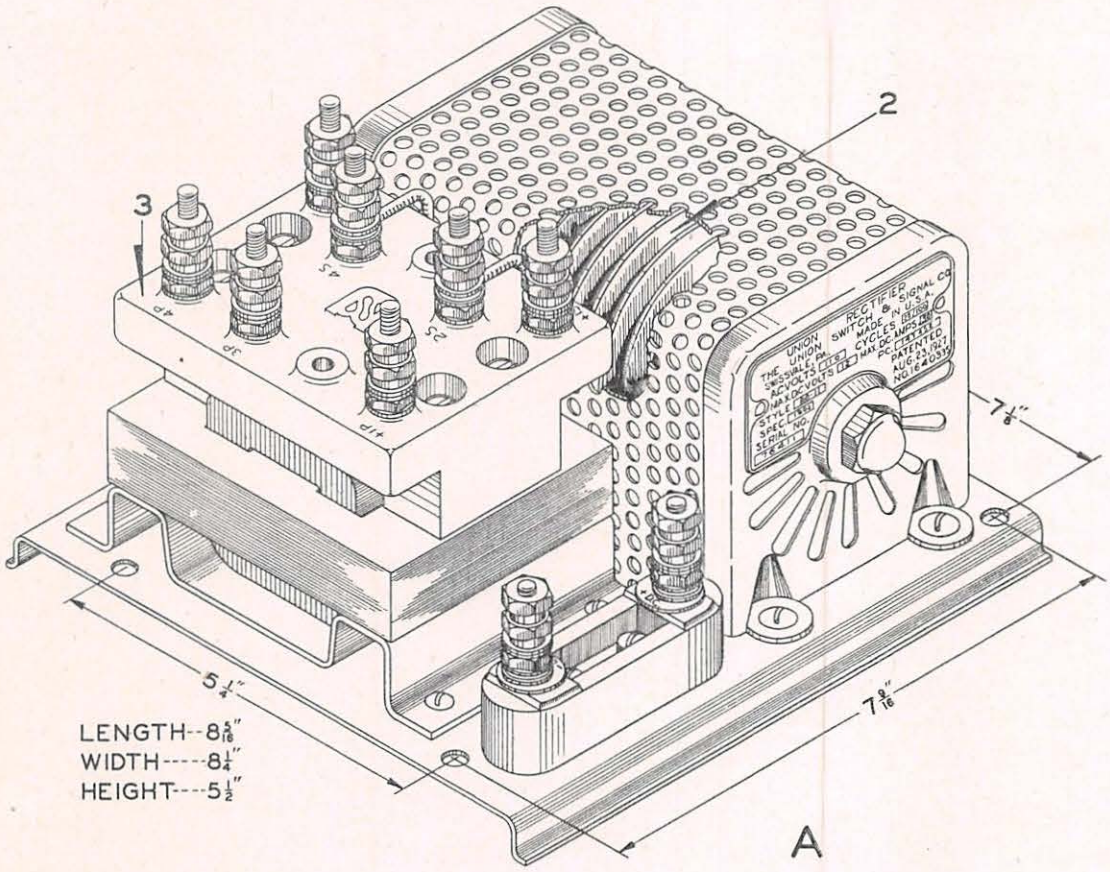

STYLE "RQ-12" RECTIFIER

9-9-40

UNION SWITCH & SIGNAL CO.

CODED TRACK CIRCUIT CONTROL SYSTEM

STYLE "RQ-12" RECTIFIER

Order by Plate, Piece, Reference and Abbreviated Description Given in Heavy Face Type Only

STYLE "RQ-12" RECTIFIER								
			D.C. OUTPUT		A.C. INPUT			
PIECE	REF.	SPEC.	VOLTS MAX.	AMPERES MAX.	VOLTS	CYCLES	REMARKS	DWG.REF.
210643	A	3037	17	0.6	112.5	25/100		C-9135-22
210938	Aa	3061	17.5	0.6	110	60/100		C-9135-22

PIECE	REF.	DESCRIPTION	DWG.REF.
150281	2	RECTIFIER STACK COMPLETE for Ref.A.....	C-9134-20
142464	2a	RECTIFIER STACK COMPLETE for Ref.Aa.....	C-9134-8
210641	3	TRANSFORMER COMPLETE for Ref.A.....	C-8605-26
210939	3a	TRANSFORMER COMPLETE for Ref.Aa.....	C-8605-26

2-2-42

PLATE W-60A

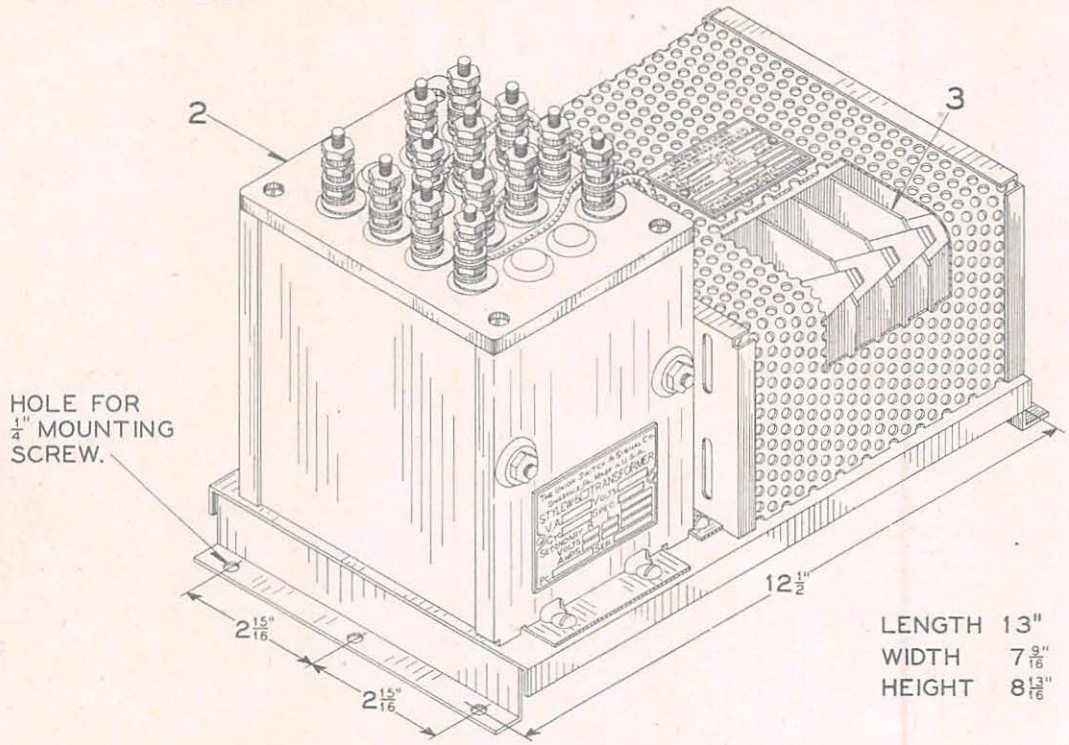

A

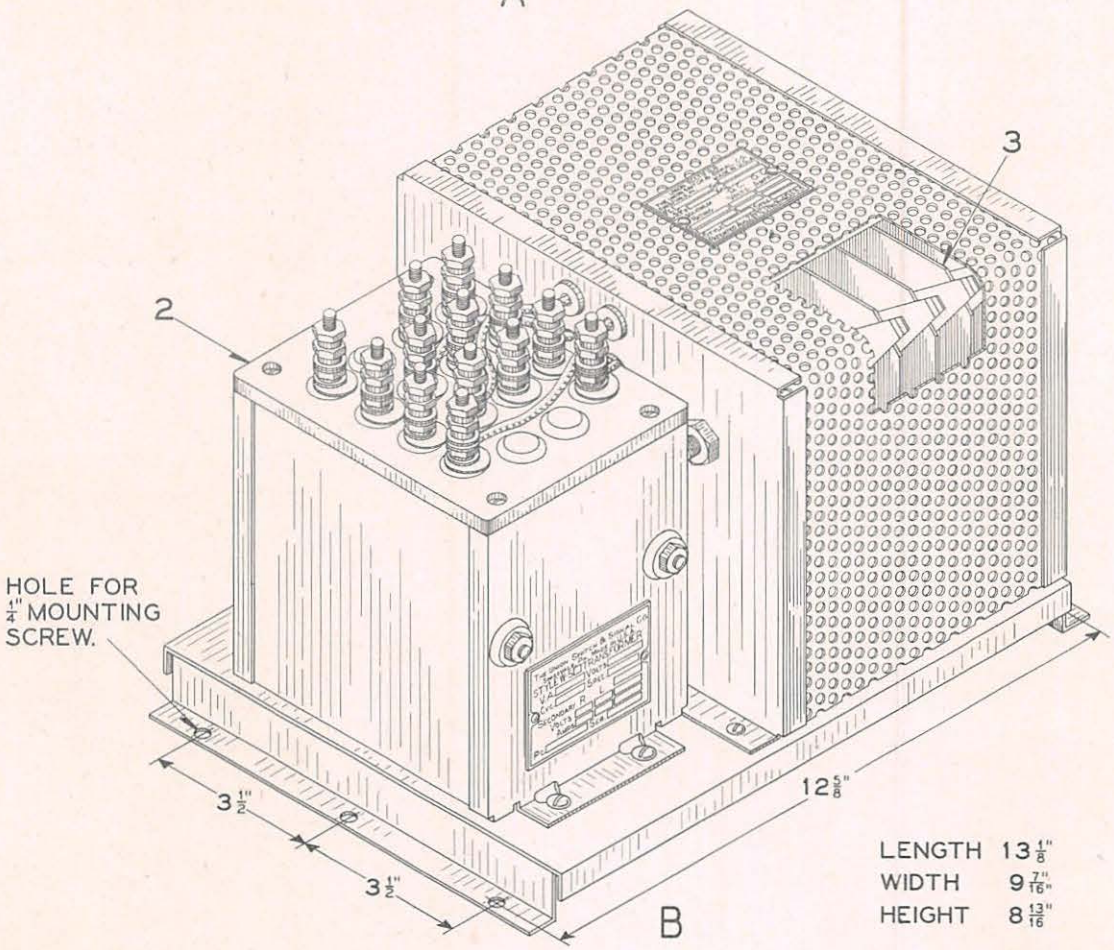

B

11-25-46

STYLES "RQ-206" AND "RQ-406" RECTIFIERS

UNION SWITCH & SIGNAL CO.

CODED TRACK CIRCUIT CONTROL SYSTEM

STYLES "RQ-206" AND "RQ-406" RECTIFIERS

Order by Plate, Piece, Reference and Abbreviated Description

STYLE "RQ-206" RECTIFIER

PIECE	REF.	SPEC.	D.C. OUTPUT MAX. VOLTS	D.C. OUTPUT MAX. AMPS.	A.C. INPUT VOLTS	A.C. INPUT CYCLES	REMARKS	DWG.REF.
255949	A	3728	14	1.7	112.5	50/100		C-9135-159

STYLE "RQ-406" RECTIFIER

PIECE	REF.	SPEC.	D.C. OUTPUT MAX. VOLTS	D.C. OUTPUT MAX. AMPS.	A.C. INPUT VOLTS	A.C. INPUT CYCLES	REMARKS	DWG.REF.
255950	B	3732	14	3.4	112.5	50/100		C-9135-160

PIECE	REF.	DESCRIPTION	DWG.REF.
256213	2	TRANSFORMER for Refs.A and B.....	C-16725-2
256212	3	RECTIFIER STACK COMPLETE for Refs.A and B.....	C-16715-7

11-25-46

PLATE W-65E

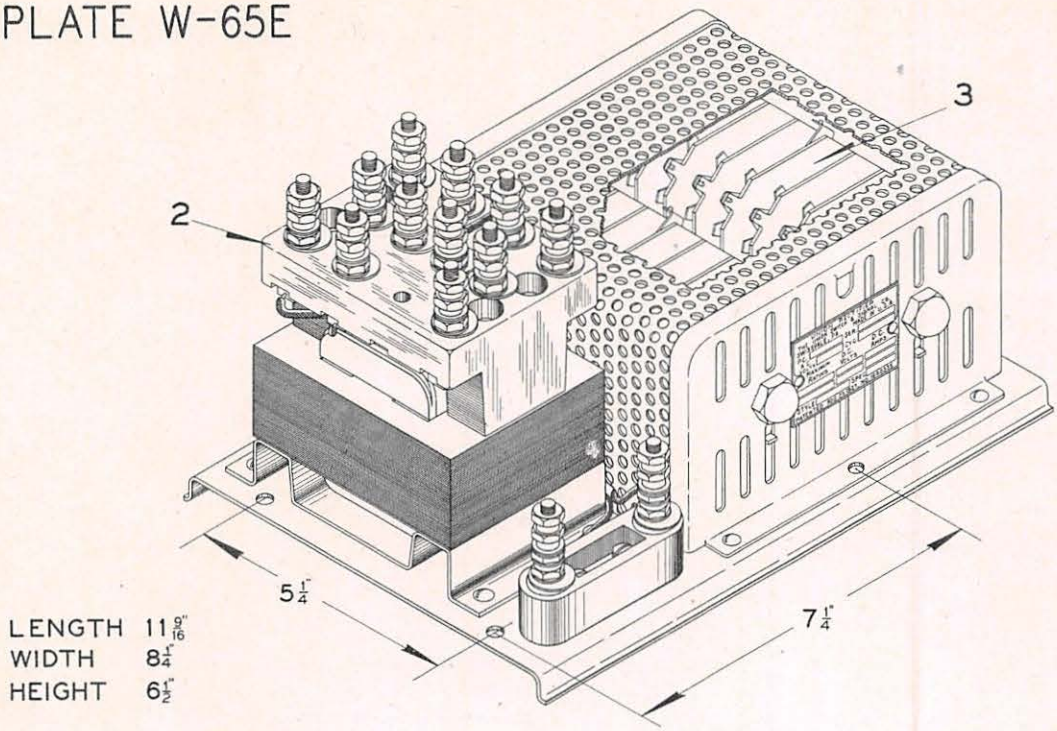

A

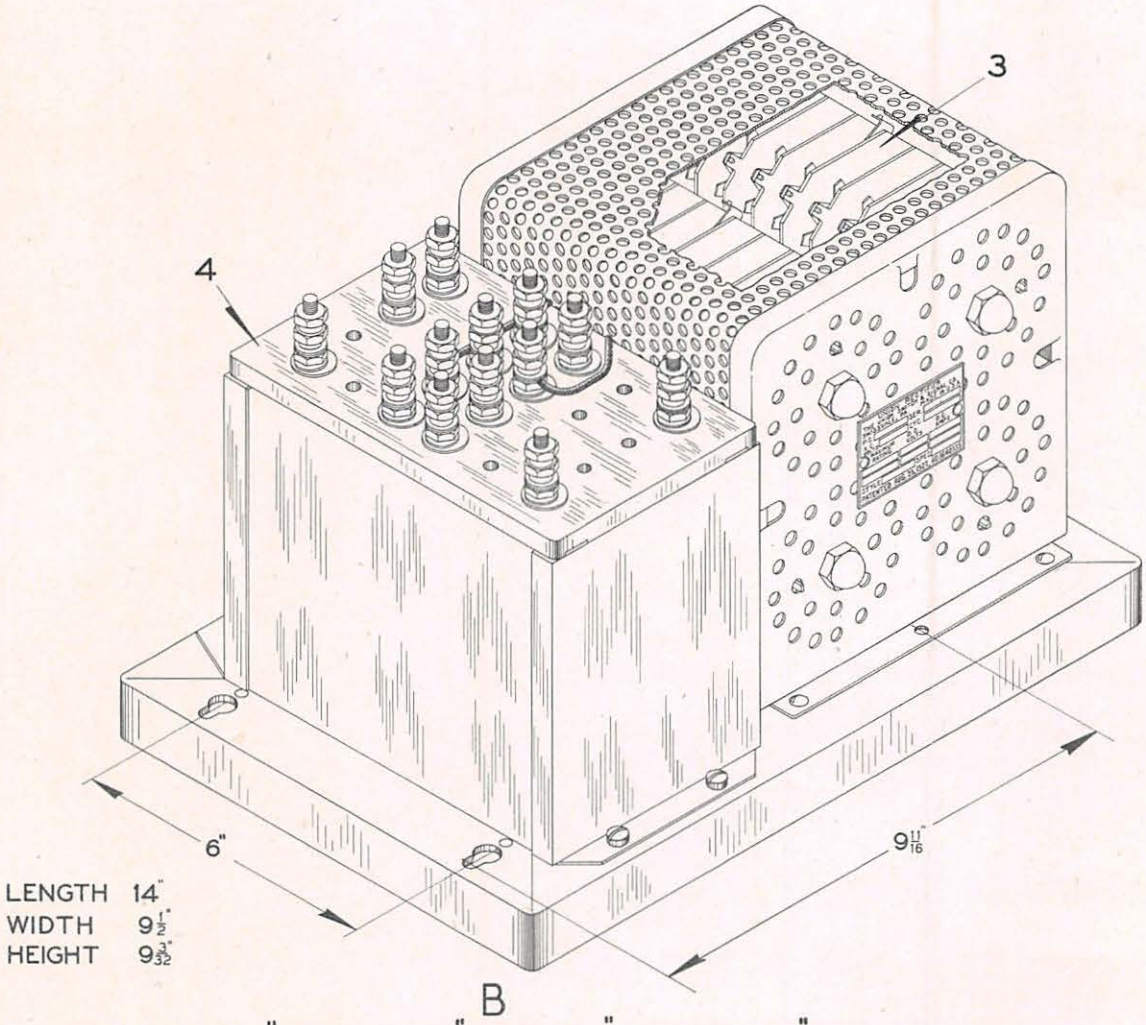

B

STYLES "R3Q-208" AND "R3Q-408" RECTIFIERS

9-9-40

UNION SWITCH & SIGNAL CO.

CODED TRACK CIRCUIT CONTROL SYSTEM

STYLE "R3Q-208" AND "R3Q-408" RECTIFIERS

Order by Plate, Piece, Reference and Abbreviated Description Given in Heavy Face Type Only

STYLE "R3Q-208" RECTIFIER								
			D.C. OUTPUT		A.C. INPUT			
PIECE	REF.	SPEC.	VOLTS MAX.	AMPERES MAX.	VOLTS	CYCLES	REMARKS	DWG. REF.
212991	A	3146	14	1.5	112.5	25/100		C-9135-116
STYLE "R3Q-408" RECTIFIER								
214586	B	3218	14	3	112.5	25/100		C-9135-117

PIECE	REF.	DESCRIPTION	DWG. REF.
213516	2	TRANSFORMER COMPLETE.....	C-8605-26
106586	3	RECTIFIER STACK COMPLETE for Refs. A and B.....	C-16715-2
215408	4	TRANSFORMER COMPLETE.....	C-9228-15

PLATE W-66

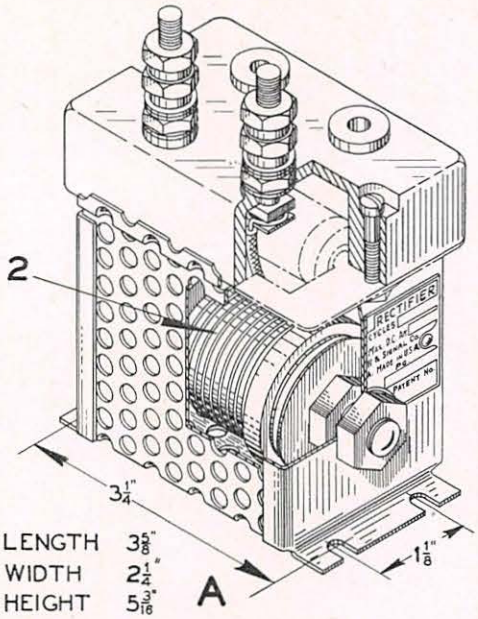

LENGTH 3 5/8"
WIDTH 2 1/4"
HEIGHT 5 3/16"

A

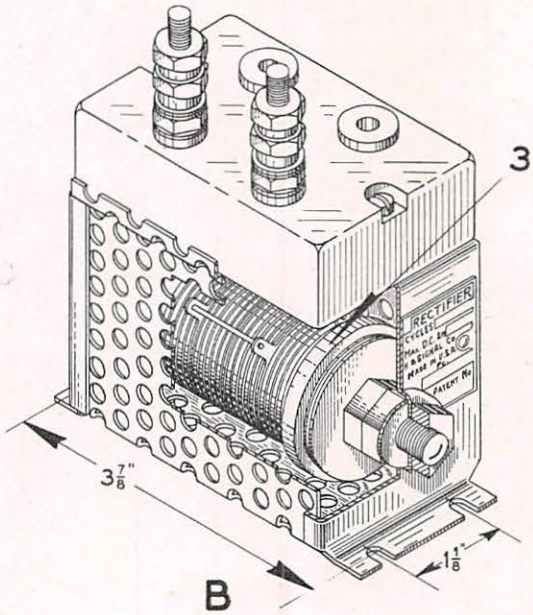

B

LENGTH 4 1/2"
WIDTH 2 1/4"
HEIGHT 5 3/16"

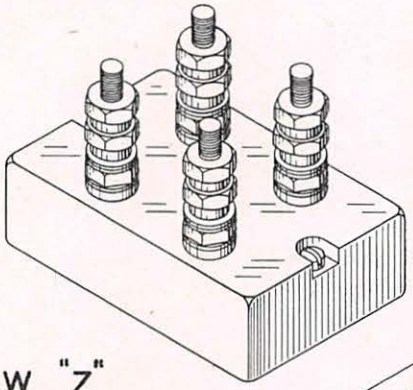

VIEW "Z"

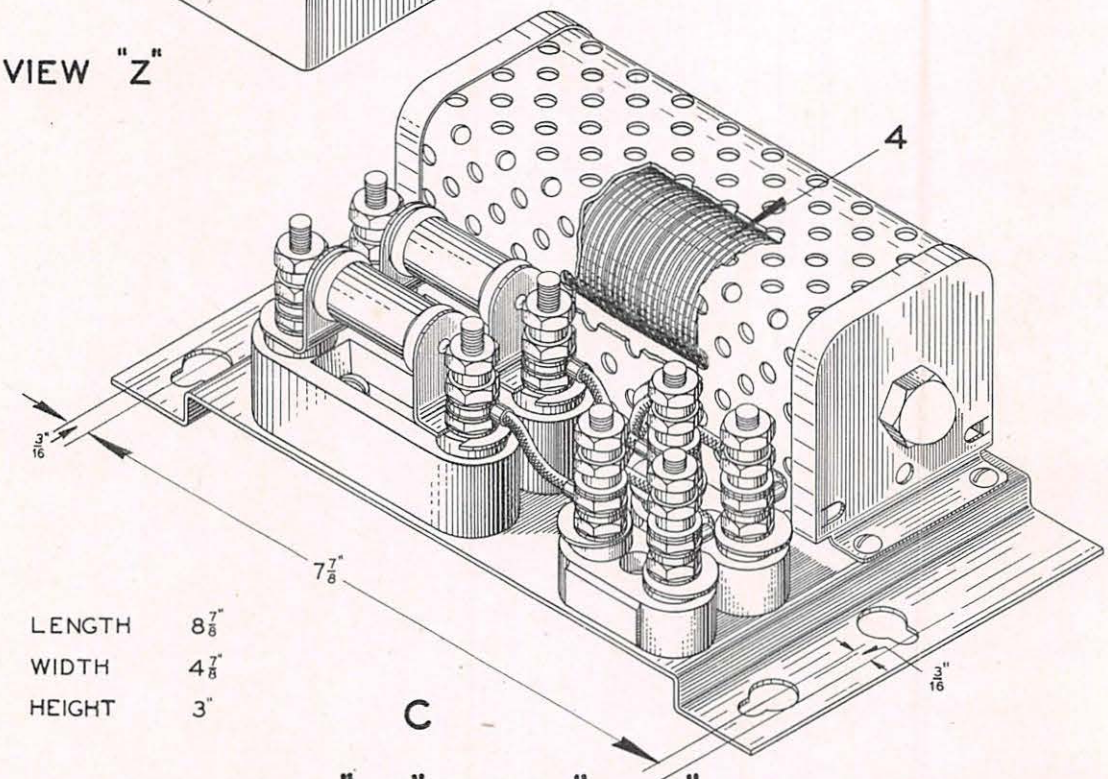

LENGTH 8 7/8"
WIDTH 4 7/8"
HEIGHT 3"

C

9-9-40 STYLES "RN" AND "RNR" RECTIFIERS

UNION SWITCH & SIGNAL CO.

CODED TRACK CIRCUIT CONTROL SYSTEM

STYLE "RN" AND "RNR" RECTIFIERS

Order by Plate, Piece, Reference and Abbreviated Description Given in Heavy Face Type Only

STYLE RECTIFIER, REF..... PLATE W-66									
				D.C.OUTPUT		A.C.INPUT			
PIECE	REF.	STYLE	SPEC.	VOLTS MAX.	AMPERES MAX.	VOLTS	CYCLES	REMARKS	DWG.REF.
209642	A	RN-3	3001	19.0	1.0			Without Resistor	C-9135-59
216177	Aa	RNR-3	3246	6.0				With Resistor	C-9135-59
216179	Ab	RN-16	3248	9				Without Resistor	C-9135-40
216178	B	RN-16	3247	15				Without Resistor	C-9135-40
216180	Ba	RN-17	3245	6.0	0.30	9.0	25/100	Without Resistor (Per View "Z")	C-9135-60
107816	C	RNR-19	3199						C-9135-119

PIECE	REF.	DESCRIPTION	DWG.REF.
209841	2	RECTIFIER STACK COMPLETE for Ref.A.....	C-9134-59
216340	2a	RECTIFIER STACK COMPLETE for Ref.Aa.....	C-9134-69
216342	2b	RECTIFIER STACK COMPLETE for Ref.Ab.....	C-9134-70
216341	3	RECTIFIER STACK COMPLETE for Ref.B.....	C-9134-54
216293	3a	RECTIFIER STACK COMPLETE for Ref.Ba.....	C-9134-46
107802	4	RECTIFIER STACK COMPLETE for Ref.C.....	C-9134-69

PLATE W-66A

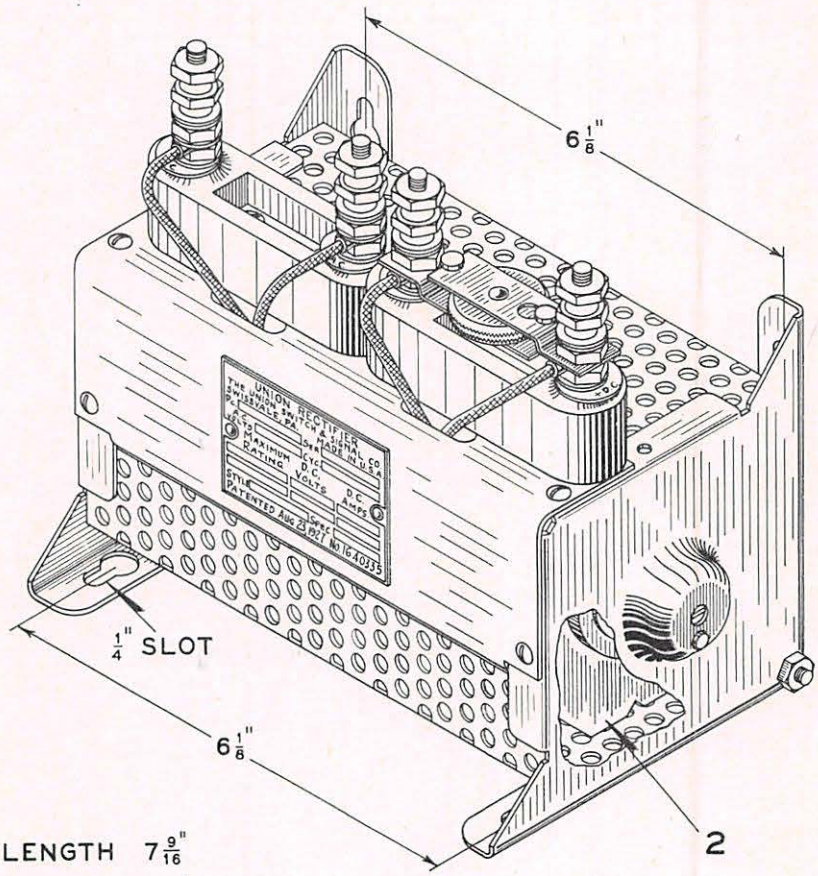

LENGTH $7\frac{9}{16}$"

WIDTH $4\frac{5}{8}$"

HEIGHT $6\frac{5}{16}$"

A

STYLE "R3N-116" RECTIFIER

2-2-42

UNION SWITCH & SIGNAL CO.

CODED TRACK CIRCUIT CONTROL SYSTEM

STYLE "R3N-116" RECTIFIER

Order by Plate, Piece, Reference and Abbreviated Description Given in Heavy Face Type Only

STYLE "R3N-116" RECTIFIER								
PIECE	REF.	SPEC.	D.C. OUTPUT		A.C. INPUT		REMARKS	DWG.REF.
			VOLTS MAX.	AMPERES MAX.	VOLTS	CYCLES		
212902	A	3147	2	2.8	3	25/100		C-9135-115

PIECE	REF.	DESCRIPTION	DWG.REF.
106587	2	RECTIFIER STACK COMPLETE for Ref.A.....	C-16715-2

2-2-42

PLATE W-67

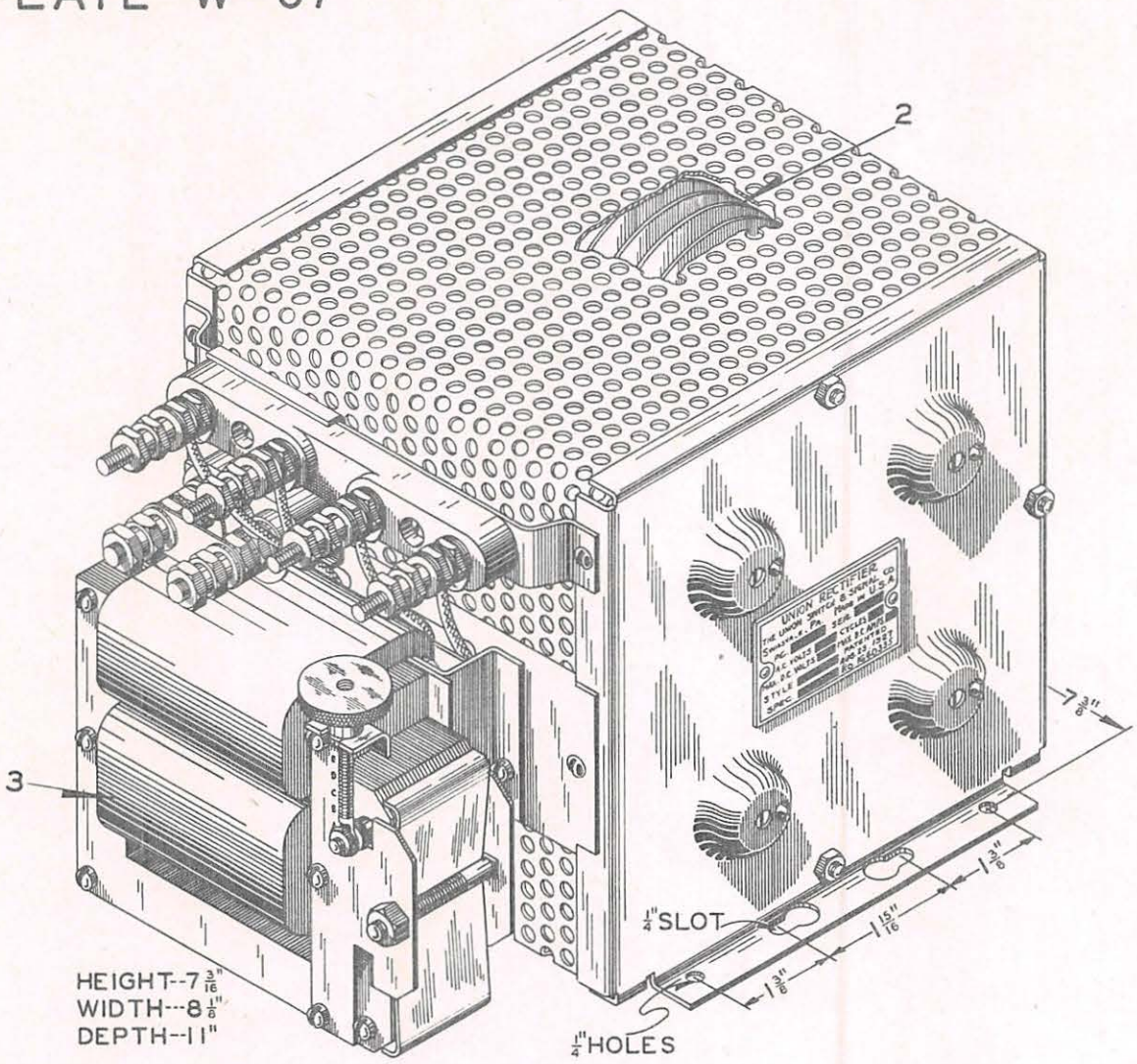

A

STYLE "RT-42" RECTIFIER

9-9-40

UNION SWITCH & SIGNAL CO.

CODED TRACK CIRCUIT CONTROL SYSTEM

STYLE "RT-42" RECTIFIER

Order by Plate, Piece, Reference and Abbreviated Description Given in Heavy Face Type Only

STYLE "RT-42" RECTIFIER

PIECE	REF.	SPEC.	D.C. OUTPUT VOLTS MAX.	D.C. OUTPUT AMPERES MAX.	A.C. INPUT VOLTS	A.C. INPUT CYCLES	REMARKS	DWG.REF.
196563	A	2784	13.5	4	110	50/60		C-9135-95
196227	Aa	2705	13.5	2.2	110	60/100		C-9135-95
196220	Ab	2773	20	1.5	110	60/100		C-9135-95
192840	Ac	2705	13.5	2.2	110	25/30		C-9135-95
216571	Ad	2773	20	1.5	110	25/30		C-9135-95
199061	Ae	2777	50	0.6	110	50/60		C-9135-95
213378	Af	3145	100	0.35	110	60		C-9135-95
199366	Ag	2773	20	1.5	110	60		C-9135-95
193401	Ah	2705	13.5	2.2	220	50/60		C-9135-95

PIECE	REF.	DESCRIPTION	DWG.REF.
187589	2	RECTIFIER STACK COMPLETE for Refs.A, Aa, Ac and Ah.....	C-9134-43
192353	2a	RECTIFIER STACK COMPLETE for Refs.Ab, Ad and Ag.....	C-9134-47
191214	2b	RECTIFIER STACK COMPLETE for Refs.Ae and Af.....	C-9134-49
196562	3	REACTIVE TRANSFORMER COMPLETE for Ref.A.....	C-8155-20
196228	3a	REACTIVE TRANSFORMER COMPLETE for Ref.Aa.....	C-8155-20
196221	3b	REACTIVE TRANSFORMER COMPLETE for Ref.Ab.....	C-8155-20
207185	3c	REACTIVE TRANSFORMER COMPLETE for Ref.Ac.....	C-8155-20
217309	3d	REACTIVE TRANSFORMER COMPLETE for Ref.Ad.....	C-8155-20
199257	3e	REACTIVE TRANSFORMER COMPLETE for Ref.Ae.....	C-8155-20
213379	3f	REACTIVE TRANSFORMER COMPLETE for Ref.Af.....	C-8155-20
199367	3g	REACTIVE TRANSFORMER COMPLETE for Ref.Ag.....	C-8155-20
192838	3h	REACTIVE TRANSFORMER COMPLETE for Ref.Ah.....	C-8155-20

PLATE W-67E

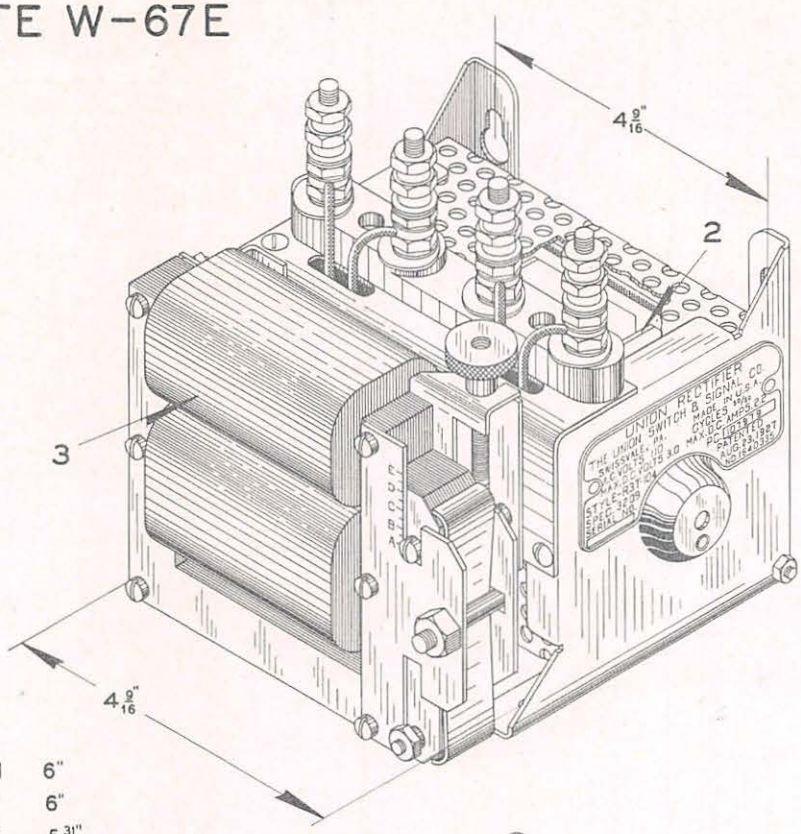

LENGTH 6"
WIDTH 6"
HEIGHT 5 31/32"

A

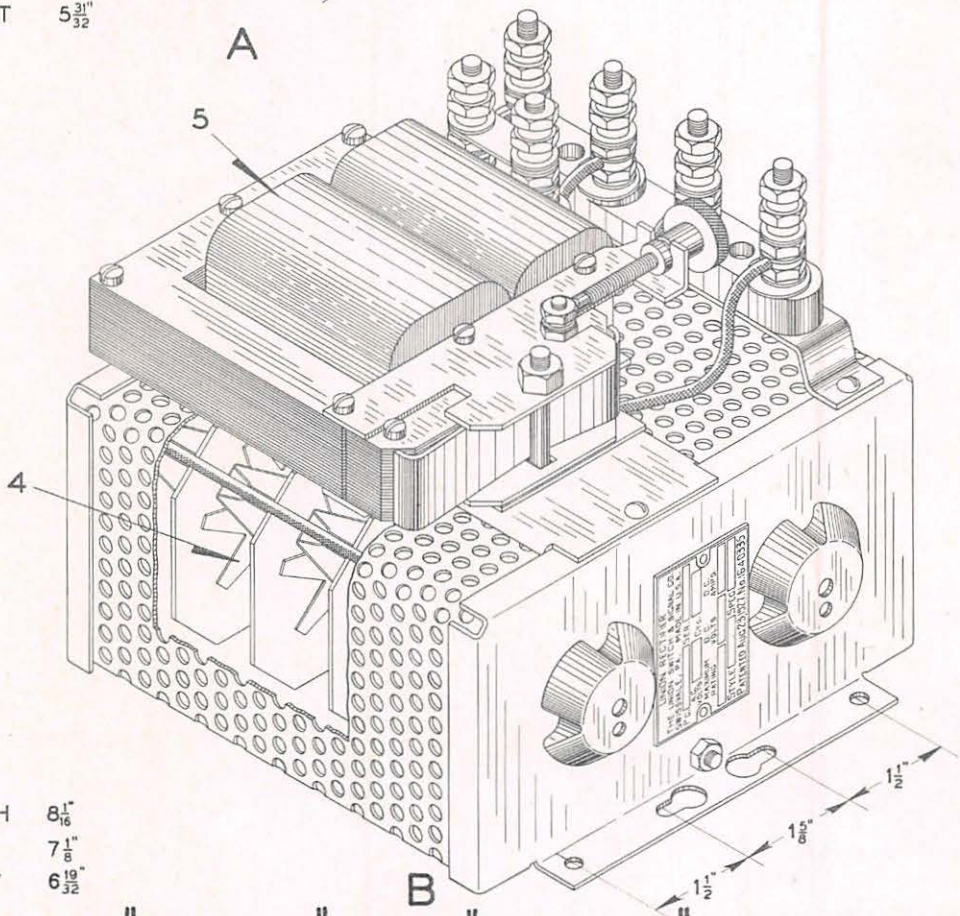

LENGTH 8 1/16"
WIDTH 7 1/8"
HEIGHT 6 19/32"

B

STYLES "R3T-104" AND "R3T-204" RECTIFIERS 9-9-40

UNION SWITCH & SIGNAL CO.

CODED TRACK CIRCUIT CONTROL SYSTEM

STYLE "R3T-104" AND "R3T-204" RECTIFIERS

Order by Plate, Piece, Reference and Abbreviated Description Given in Heavy Face Type Only

STYLE "R3T-104" RECTIFIER								
			D.C.OUTPUT		A.C.INPUT			
PIECE	REF.	SPEC.	VOLTS MAX.	AMPERES MAX.	VOLTS	CYCLES	REMARKS	DWG.REF.
107979	A	3209	3	2.2	110	50/60		C-9135-125
107980	Aa	3209	3	2.2	110	60/100		C-9135-125
107982	Ab	3209	3	2.2	220	50/60		C-9135-125
		STYLE "R3T-204" RECTIFIER						
216648	B	3254	3	4.4	110	50/60		C-9135-130
216649	Ba	3254	3	4.4	110	60/100		C-9135-130

PIECE	REF.	DESCRIPTION	DWG.REF.
107925	2	RECTIFIER STACK COMPLETE	C-16715-4
215830	3	REACTIVE TRANSFORMER COMPLETE for Ref.A	C-8155-19
215831	3a	REACTIVE TRANSFORMER COMPLETE for Ref.Aa	C-8155-19
215833	3b	REACTIVE TRANSFORMER COMPLETE for Ref.Ab	C-8155-19
109397	4	RECTIFIER STACK	C-16715-3
216836	5	REACTIVE TRANSFORMER COMPLETE for Ref.B	C-8155-20
216839	5a	REACTIVE TRANSFORMER COMPLETE for Ref.Ba	C-8155-20

PLATE W-68

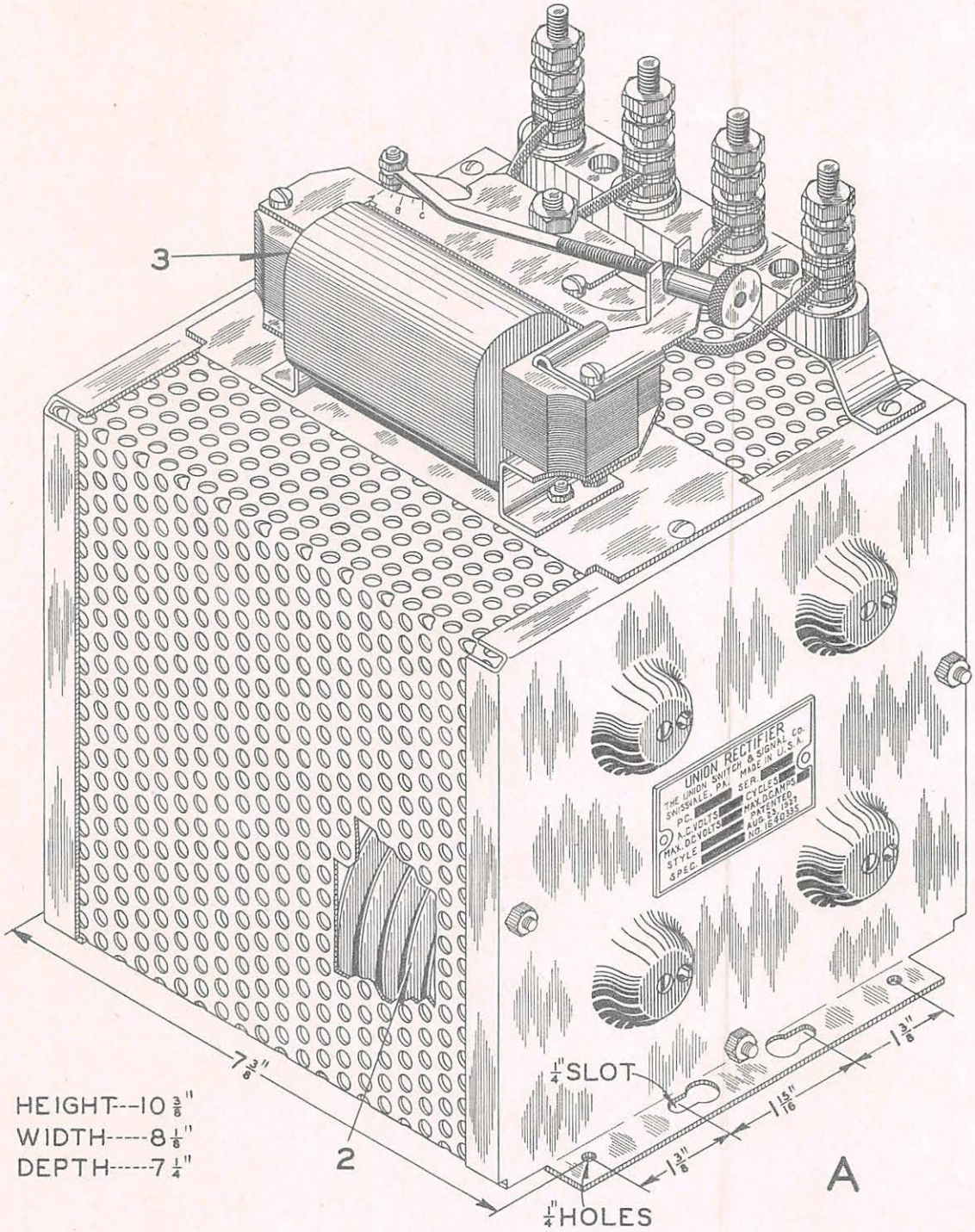

STYLE "RX-42" RECTIFIER

9-9-40

UNION SWITCH & SIGNAL CO.

CODED TRACK CIRCUIT CONTROL SYSTEM

STYLE "RX-42" RECTIFIER

Order by Plate, Piece, Reference and Abbreviated Description Given in Heavy Face Type Only

STYLE "RX-42" RECTIFIER

PIECE	REF.	SPEC.	D.C. OUTPUT VOLTS MAX.	D.C. OUTPUT AMPERES MAX.	A.C. INPUT VOLTS	A.C. INPUT CYCLES	REMARKS	DWG.REF.
102026	A	2948	13.5	2.2	20	60/100		C-9135-109
224009	Aa	3391	20	1.5	32	60		C-9135-109

PIECE	REF.	DESCRIPTION	DWG.REF.
187589	2	RECTIFIER STACK COMPLETE for Ref.A.....	C-9134-43
192353	2a	RECTIFIER STACK COMPLETE for Ref.Aa.....	C-9134-47
101600	3	REACTOR COMPLETE for Ref.A.....	C-8025-26
224010	3a	REACTOR COMPLETE for Ref.Aa.....	C-8025-26

2-2-42

PLATE W-68

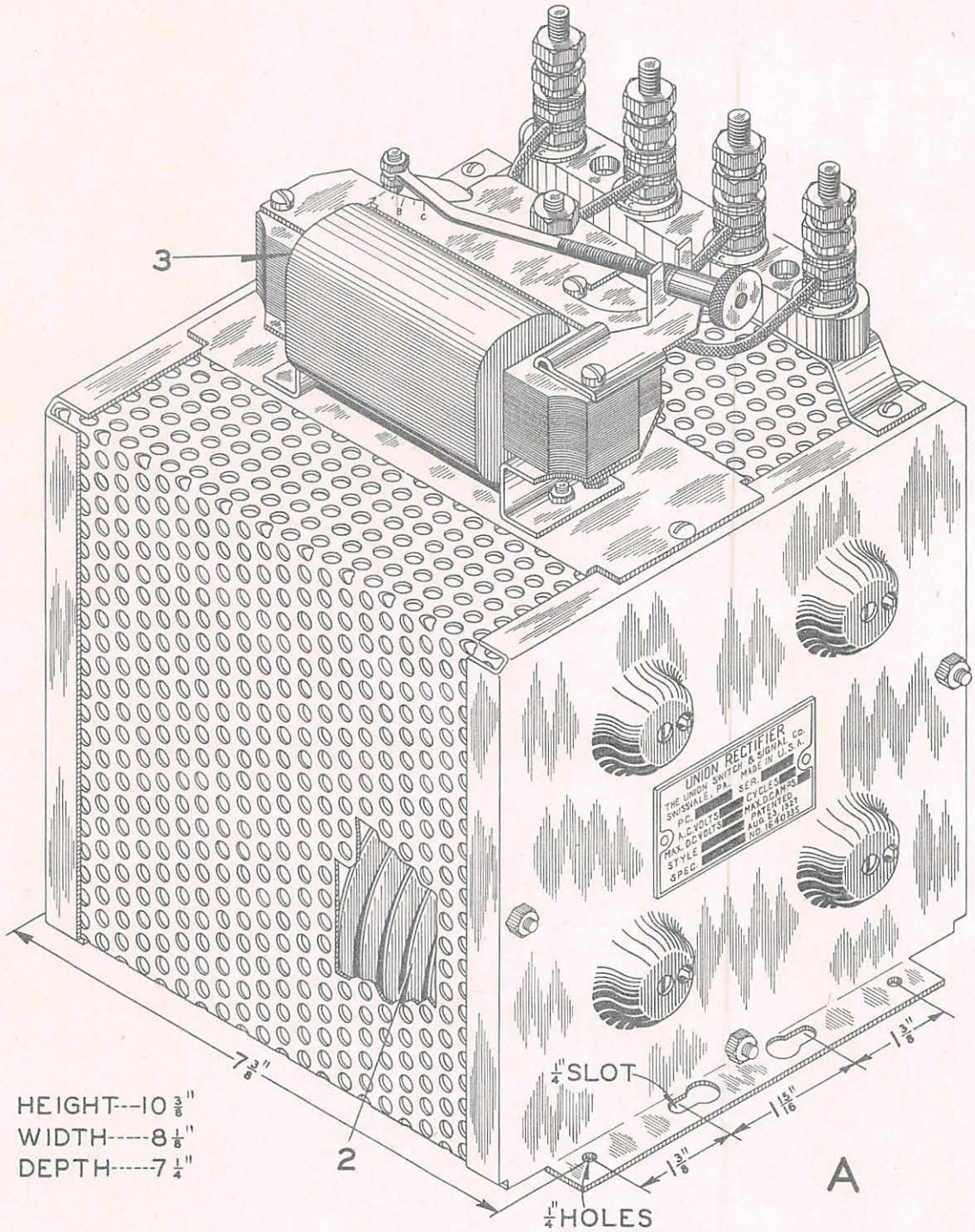

HEIGHT---10 3/8"
WIDTH-----8 1/8"
DEPTH-----7 1/4"

STYLE "RX-42" RECTIFIER

9-9-40

UNION SWITCH & SIGNAL CO.

CODED TRACK CIRCUIT CONTROL SYSTEM

STYLE "RX-42" RECTIFIER

Order by Plate, Piece, Reference and Abbreviated Description Given in Heavy Face Type Only

STYLE "RX-42" RECTIFIER

PIECE	REF.	SPEC.	D.C.OUTPUT VOLTS MAX.	D.C.OUTPUT AMPERES MAX.	A.C.INPUT VOLTS	A.C.INPUT CYCLES	REMARKS	DWG.REF.
102026	A	2948	13.5	2.2	20	60/100		C-9135-109
224009	Aa	3391	20	1.5	32	60		C-9135-109

PIECE	REF.	DESCRIPTION	DWG.REF.
187589	2	RECTIFIER STACK COMPLETE for Ref.A.....	C-9134-43
192353	2a	RECTIFIER STACK COMPLETE for Ref.Aa.....	C-9134-47
101600	3	REACTOR COMPLETE for Ref.A.....	C-8025-26
224010	3a	REACTOR COMPLETE for Ref.Aa.....	C-8025-26

2-2-42

PLATE W-68H

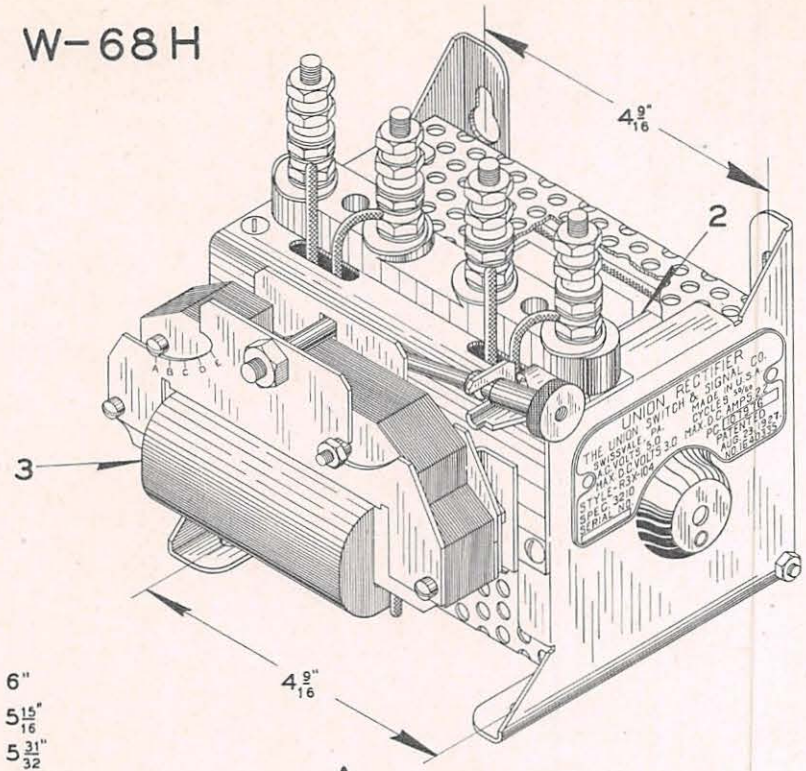

LENGTH 6"
WIDTH 5 15/16"
HEIGHT 5 31/32"

A

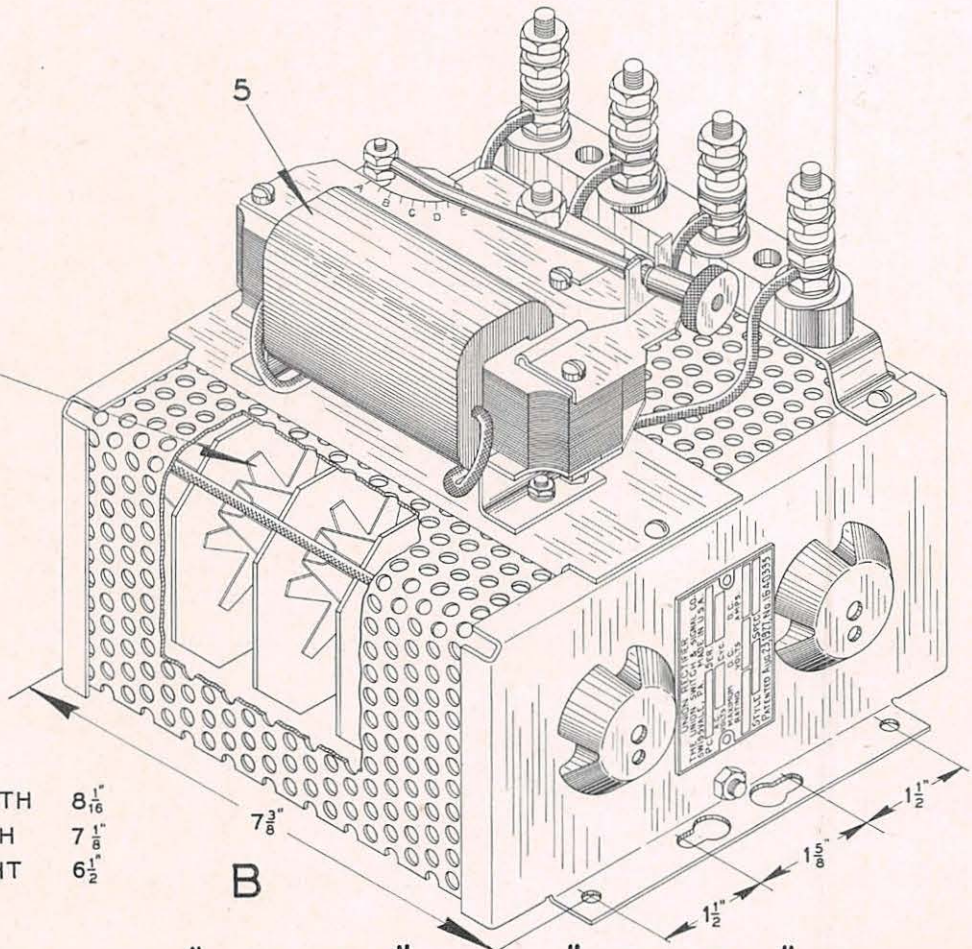

LENGTH 8 1/16"
WIDTH 7 1/8"
HEIGHT 6 1/2"

B

9-9-40

STYLES "R3X-104" AND "R3X-204" RECTIFIERS

UNION SWITCH & SIGNAL CO.

CODED TRACK CIRCUIT CONTROL SYSTEM

STYLE "R3X-104", "R3X-204" AND "R3X-208" RECTIFIERS

Order by Plate, Piece, Reference and Abbreviated Description Given in Heavy Face Type Only

STYLE "R3X-104" RECTIFIER

PIECE	REF.	SPEC.	D.C.OUTPUT VOLTS MAX.	D.C.OUTPUT AMPERES MAX.	A.C.INPUT VOLTS	A.C.INPUT CYCLES	REMARKS	DWG.REF.
107976	A	3210	3	2.2	5	50/60		C-9135-123
107977	Aa	3210	3	2.2	5	60/100		C-9135-123

STYLE "....." RECTIFIER

PIECE	REF.	STYLE	SPEC.	D.C.OUTPUT VOLTS MAX.	D.C.OUTPUT AMPERES MAX.	A.C.INPUT VOLTS	A.C.INPUT CYCLES	REMARKS	DWG.REF.
216352	B	R3X-204	3251	3	4.4	5	50/60		C-9135-118
216351	Ba	R3X-204	3251	3	4.4	5	60/100		C-9135-118
107759	Bb	R3X-208	3203	3	4.4	5	60/100		C-9135-118
216570	Bc	R3X-204	3251	3.0	4.4	5.0	25/30		C-9135-118

PIECE	REF.	DESCRIPTION	DWG.REF.
107992	2	RECTIFIER STACK COMPLETE.....	C-16715-4
215815	3	REACTOR COMPLETE for Ref.A.....	C-8025-19
215816	3a	REACTOR COMPLETE for Ref.Aa.....	C-8025-19
109397	4	RECTIFIER STACK for Refs.B, Ba and Bc.....	C-16715-3
107881	4a	RECTIFIER STACK for Ref.Bb.....	C-16715-3
216663	5	REACTOR COMPLETE for Ref.B.....	C-8025-24
216662	5a	REACTOR COMPLETE for Ref.Ba.....	C-8025-24
214988	5b	REACTOR COMPLETE for Ref.Bb.....	C-8025-24
216451	5c	REACTOR COMPLETE for Ref.Bc.....	C-8025-26

PLATE W-70A

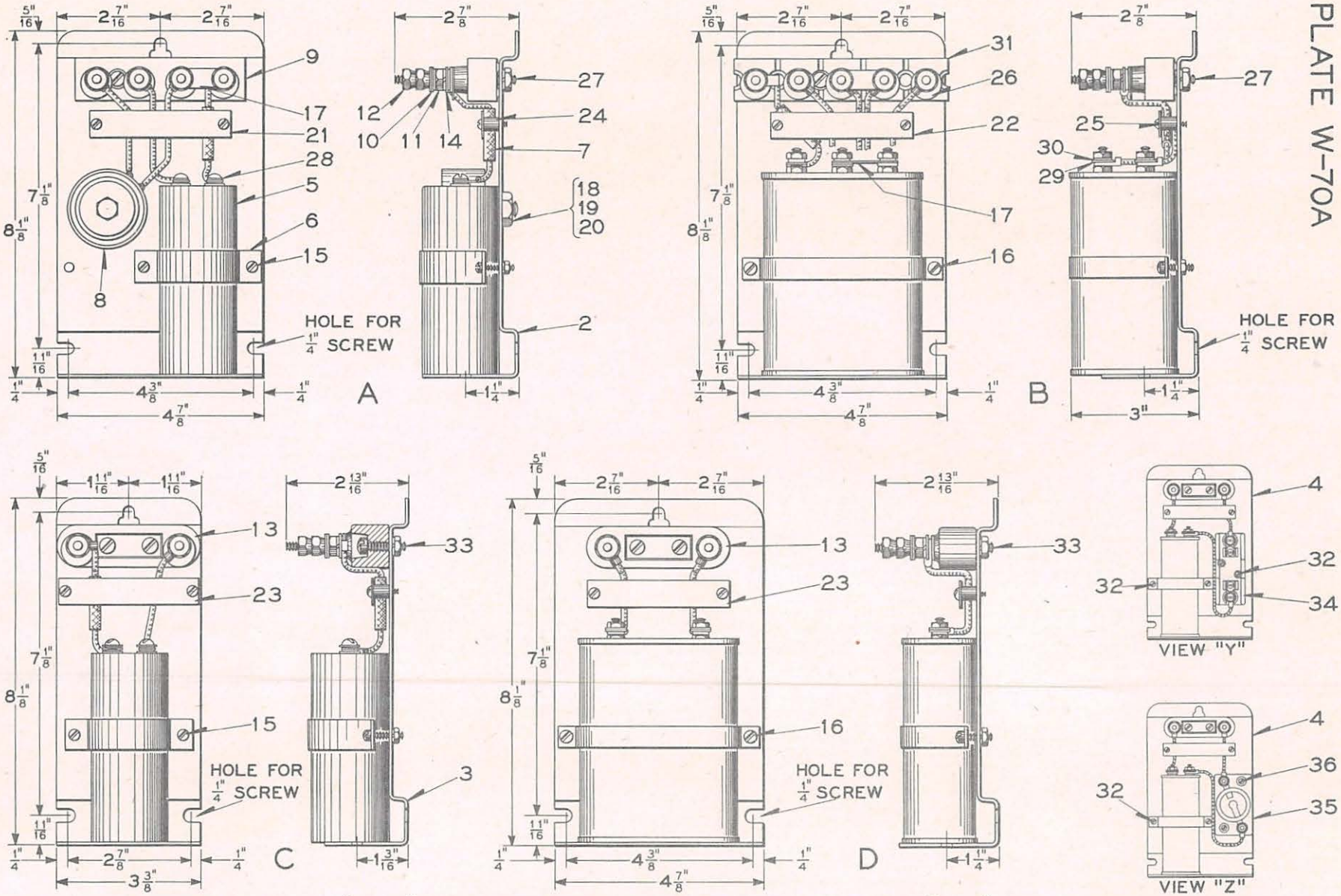

CONDENSERS, STYE "C-3" CONDENSER UNITS AND STYLE "C-A" ARC SUPPRESSORS.

11-25-46

UNION SWITCH & SIGNAL CO.

CODED TRACK CIRCUIT CONTROL SYSTEM

CONDENSERS, STYLE "C-3" CONDENSER UNITS AND
STYLE "CA" ARC SUPPRESSORS

Order by Plate, Piece, Reference and Abbreviated Description

STYLE "C-3" CONDENSER UNIT.....Dwg. C-16862-1

PIECE	REF.	CONDENSER MFD.	CONDENSER REF.	RESISTOR OHMS	RESISTOR REF.	CONDENSER CLAMP	REMARKS
255867	A	1200	5	15	7	6	10/12 V. Reverse Codes
257130	Aa	2000	5a	15	7	6	8 V. Reverse Codes
255866	Ab	2000	5a	30	7b	6	12 V. Normal Codes
258451	Ac	4000	5b	20	7a	6a	10 V. Normal Codes
258452	Ad	4000	5b	20	7a	6a	8 V. Normal Codes

STYLE "CA" ARC SUPPRESSOR.....Dwg. C-16862-2

PIECE	REF.	CONDENSER MFD.	CONDENSER REF.	RESISTOR OHMS	RESISTOR REF.	CONDENSER CLAMP	REMARKS
237122	B	2-2-4-4	5c	15	7	6b	
240986	Ba	2-2-4-4	5c			6b	

CONDENSERS ON NARROW BASE PLATE.....Dwg.C-16862-3

PIECE	REF.	CONDENSER MFD.	CONDENSER REF.	RESISTOR OHMS	RESISTOR REF.	CONDENSER CLAMP	REMARKS
219531	C	0.94	5e			6c	
240377	Ca	1.0	5g			6c	
231434	Cb	2.0	5f			6c	
213646	Cc	2.5	5d			6c	
257354	Cd	1200	5	15	7	6	
231918	Ce	2000	5a			6	
257355	Cf	2000	5a	15	7	6	
239954	Cg	2000	5a	30	7a	6	
237660	Ch	2000	5a	100	7b	6	
261483	Cj	2500	5h	15	7	6	
246718	Ck	4000	5b			6a	

UNION SWITCH & SIGNAL CO.

CONDENSERS ON WIDE BASE PLATE.....Dwg. C-16862-4

PIECE	REF.	CONDENSER MFD.	CONDENSER REF.	CONDENSER CLAMP	REMARKS
260910	Da	2	5p	6e	200 V. D.C. Condenser
193020	Da	2.5	5d	6c	With Cartridge Fuse Block per View "Y"
224439	Db	2.5	5d	6c	With Plug Type Fuse Block per View "Z"
215730	Dc	5	5k	6d	
212501	Dd	7	5j	6d	
236210	De	12	5l	6b	
259587	Df	13	5n	6d	
237991	Dg	15	5m	6b	

PIECE	REF.	DESCRIPTION	DWG.REF.
255795	2	BASE PLATE for Refs.A, Aa, Ab, Ac, Ad, B, Ba, D, Dc, Dd, De, Df and Dg.....	10914-1815
263539	3	BASE PLATE for Refs.C to Ck inc.....	10914-1936
263761	4	BASE PLATE for Refs.Da and Db.....	10914-1815
255787	5	CONDENSER (1200 MFD.).....	B-12549-45
255786	5a	CONDENSER (2000 MFD.).....	B-12549-45
258934	5b	CONDENSER (4000 MFD.).....	B-12549-54
237261	5c	CONDENSER (2-2-4-4 MFD.).....	B-12549-62
223345	5d	CONDENSER (2.5 MFD.).....	B-12549-38
182284	5e	CONDENSER (0.94 MFD.).....	B-12549-21
183014	5f	CONDENSER (2.0 MFD.).....	B-12549-21
C.N.700582	5g	CONDENSER (1.0 MFD.).....	B-12549-
263799	5h	CONDENSER (2500 MFD.).....	B-12549-45
182458	5j	CONDENSER (7.0 MFD.).....	B-12549-22
182554	5k	CONDENSER (5.0 MFD.).....	B-12549-22
235370	5l	CONDENSER (12 MFD.).....	B-12549-3
102499	5m	CONDENSER (15 MFD.).....	B-12549-35
211515	5n	CONDENSER (13 MFD.).....	B-12549-22
235804	5p	CONDENSER (2 MFD.).....	B-12549-48
255878	6	CONDENSER CLAMP.....	10914-1321
258938	6a	CONDENSER CLAMP.....	10914-1704

UNION SWITCH & SIGNAL CO.

PIECE	REF.	DESCRIPTION	DWG. REF.
261741	6b	CONDENSER CLAMP	10914-1516
263538	6c	CONDENSER CLAMP	10914-668
234211	6d	CONDENSER CLAMP	10914-790
264213	6e	CONDENSER CLAMP	10914-1516
255853	7	RESISTOR COMPLETE (15-Ohms)	9065-357
255854	7a	RESISTOR COMPLETE (30-Ohms)	9065-357
263540	7b	RESISTOR COMPLETE (100-Ohms)	9065-357
100161	8	RECTIFIER COMPLETE for Ref.A	12558-35
258936	8a	RECTIFIER COMPLETE for Ref.Aa	12558-59
255801	8b	RECTIFIER COMPLETE for Refs.A, Ab and Ac	12558-54
258937	8c	RECTIFIER COMPLETE for Ref.Ad	12558-60
	9	TERMINAL BLOCK Ref.9a with Nuts and Washers (Inc.1-9a, 16-10, 4-11, 8-12 and 4-14)	
107471	9a	TERMINAL BLOCK ONLY	9968-1255
29102	10	WASHER	7828-139
127260	11	NUT	8109-194
29101	12	NUT	8109-193
	13	TERMINAL BLOCK Ref.13a with Nuts and Washers (Inc.1-13a, 4-10, 2-11, 4-12 and 2-14)	
170363	13a	TERMINAL BLOCK ONLY	9968-1030
	14	1/4 in. PLAIN S;LOCK WASHER (3/32 in. x 1/16 in.) (Tin Pl.)	
	15	MACHINE SCREW, NO.8-36 x 3/4 in. Fil.Hd.S. (Tin Pl.) with No.8 Plain S.Lock Washer (1/16 in. x 3/64 in.) and No.8-36 Hex.S.Nut	
	16	MACHINE SCREW, NO.10-32 x 5/8 in. Fil.Hd.S. (Tin Pl.) with No.10 Plain S.Lock Washer (1/16 in. x 3/64 in.) (Tin Pl.) and No.10-32 Hex.S. Nut (Tin Pl.)	
47290	17	TERMINAL CONNECTOR	8065-305
62222	18	WASHER	7826-180
	19	3/8 in. S.LOCK WASHER (Int.Teeth) (Tin Pl.)	
	20	3/8 in. HEX.JAM NUT	
255774	21	NAME PLATE	8225-822
255773	22	NAME PLATE	8225-821
255772	23	NAME PLATE	8225-820
255776	24	SPACER	8350-856

UNION SWITCH & SIGNAL CO.

PIECE	REF.	DESCRIPTION	DWG. REF.
	25	SCREW, NO.6 x 5/8 in. Rd.Hd.Hardened	
142777	26	TAG (Order should specify marking desired).....	8988-75
	27	MACHINE SCREW, NO.14-24 x 3/4 in. Fil.Hd.S. (Tin Pl.) with 1/4 in. Plain S.Lock Washer (3/32 in. x 1/16 in.) (Tin Pl.) and Nut Ref.27a	
93420	27a	NUT.....	8265-128
44618	28	WASHER.....	7828-184
821	29	WASHER.....	7828-4
	30	NO.12 LOCK WASHER (Int.Teeth) (Tin Pl.)	
	31	TERMINAL BLOCK Ref.31a with Nuts and Washers (Inc.1-31a, 20-10, 5-11, 10-12 and 5-14)	
109155	31a	TERMINAL BLOCK ONLY.....	9968-1255
	32	MACHINE SCREW, NO.8-36 x 1/2 in. Fil.Hd.S. (Tin Pl.) with No.8 Plain S.Lock Washer (1/16 in. x 3/64 in.) (Tin Pl.) and No.8-36 Hex.S.Nut (Tin Pl.)	
	33	MACHINE SCREW, NO.14-24 x 7/8 in. Fil.Hd.S. (Tin Pl.) with 1/4 in. Plain S.Lock Washer (3/32 in. x 1/16 in.) Tin Pl. and Nut Ref.27a	
	34	CARTRIDGE FUSE BLOCK (30 Amp., 250 V.)	
121591	35	PLUG TYPE FUSE BLOCK.....	9954-60
	36	MACHINE SCREW, NO.8-36 x 11/16 in. Fil.Hd.S. (Tin Pl.) with No.8 Pl. S.Lock Washer (1/16 in. x 3/64 in.) (Tin Pl.) and No.8-36 Hex.S.Nut (Tin Pl.)	

PLATE W-70B

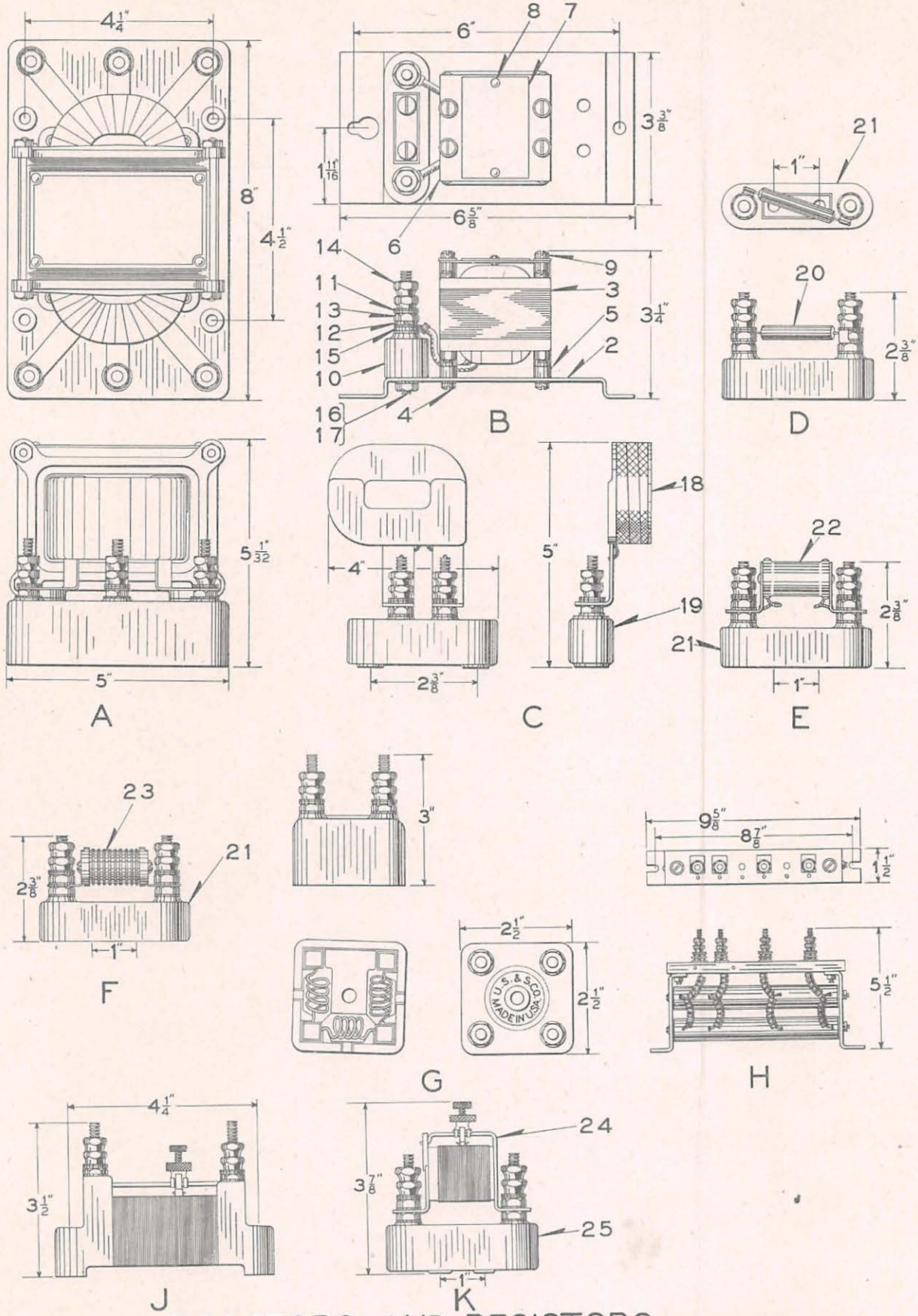

11-25-46 REACTORS AND RESISTORS

UNION SWITCH & SIGNAL CO.

CODED TRACK CIRCUIT CONTROL SYSTEM
REACTORS, CODE REACTOR COIL, AND RESISTORS

Order by Plate, Piece, Reference and Abbreviated Description

STYLE "VT-5" REACTOR

PIECE	REF.	MAX. AMP. CONS. LOAD	MAX. VOLTS	FREQ.	IMP. MAX.	IMP. MIN.	AIR GAP	SPEC.	APP.	DWG.REF.
150426	A	25	30	60/100	1.03	.02	.026 in.	672	St. Tr. Cir.	C-8025-2

STYLE "VT-12" REACTOR

PIECE	REF.	VOLTS	OHMS IMP.	CYCLES	AIR GAP	SPEC.	DWG.REF.
231692	B	25	6.5	60	.008 in.	3481	C-8025-38
253168	Ba	10	14	60	.008 in.	3789	C-8025-38
253169	Bb	16	33	60	.008 in.	3790	C-8025-38

PIECE	REF.	DESCRIPTION	DWG.REF.
148066	C	CODE REACTOR COIL MOUNTED ON TERMINAL BLOCK.....	C-8025-9

RESISTOR COMPLETE FOR WAYSIDE EQUIPMENT (2 WATTS CONTINUOUS CAPACITY)

PIECE	REF.	RESISTANCE (OHMS)	REMARKS	DWG.REF.
239906	D	10		9065-307
240091	Da	15		9065-307
254039	Db	30		9065-307
249622	Dc	39		9065-307
243459	Dd	51		9065-307
245907	De	82		9065-307
239488	Df	100		9065-307
246133	Dg	150		9065-307
266257	Dh	200		9065-307
242420	Dj	240		9065-307
241609	Dk	300		9065-307
242586	Dl	390		9065-307

UNION SWITCH & SIGNAL CO.

RESISTOR COMPLETE FOR WAYSIDE EQUIPMENT (2 WATTS CONTINUOUS CAPACITY) (cont'd.)

PIECE	REF.	RESISTANCE (OHMS)	REMARKS	DWG.REF
236931	Dm	510		9065-307
236930	Dn	620		9065-307
239903	Do	750		9065-307
240251	Dp	1000		9065-307
231555	Dq	2000		9065-307

RESISTOR COMPLETE FOR WAYSIDE EQUIPMENT (3 WATTS CONTINUOUS CAPACITY)

PIECE	REF.	RESISTANCE (OHMS)	REMARKS	DWG.REF
239471	E	1		9065-251
214896	Ea	15		9065-251
216191	Eb	25		9065-251
206999	Ec	30		9065-251
215687	Ed	35		9065-251
189956	Ee	50		9065-251
218219	Ef	60		9065-251
238133	Eg	80		9065-251
191652	Eh	100		9065-251

RESISTOR COMPLETE FOR WAYSIDE EQUIPMENT (5 WATTS CONTINUOUS CAPACITY)

PIECE	REF.	RESISTANCE (OHMS)	REMARKS	DWG.REF
263612	F	0.1		9065-300
218512	Fa	0.2		9065-300

PIECE	REF.	DESCRIPTION	DWG.REF
254930	G	VARIABLE RESISTANCE UNIT (Resistance A = .16 Ohm, B = .24 Ohm, and .08 Ohm. Total Resistance = .48 Ohm).....	9065-205
	H	RESISTOR COMPLETE (300-Ohms in sections of 100, 150, and 50 Ohms).	9065-275

VARIABLE RESISTOR

PIECE	REF.	MAX.RES. OHMS	MIN.RES. OHMS	APPROX.ADJ. IN STEPS OF	AMP. CAP.	DWG.REF
197139	J	0.3	0.025	0.014	6.3	9065-199
212815	Ja	0.6	0.041	0.027	4.5	9065-199
156681	Jb	1.2	0.12	0.045	3.3	9065-199
156682	Jc	2.5	0.15	0.03	2.3	9065-199
186438	Jd	3.5	0.24	0.07	2.0	9065-199

UNION SWITCH & SIGNAL CO.

VARIABLE RESISTOR (cont'd.)						
PIECE	REF.	MAX.RES. OHMS	MIN.RES. OHMS	APPROX.ADJ. IN STEPS OF	AMP. CAP.	DWG.REF.
156683	Je	4.5	0.3	0.09	1.7	9065-199
214995	Jf	9.0	0.6	0.18	1.1	9065-199
156684	Jg	12.0	0.7	0.25	1.0	9065-199
161444	Jh	16.0	1.0	0.32	0.86	9065-199
215747	Jj	20.0	1.2	0.4	0.77	9065-199
156685	Jk	30.0	1.8	0.6	0.6	9065-199

PIECE	REF.	DESCRIPTION	DWG.REF.
151651	K	VARIABLE RESISTOR COMPLETE 5 ohms total resistance 1.1 Ampere Capacity, adjustable in steps of 0.2	9065-188
	L	21-A-24 RESISTOR (Not shown) (For details refer to Plate F-6509)	
	M	36-A-17 RESISTOR (Not shown) (For details refer to Plate F-6509)	
232524	2	BASE PLATE	10914-1374
232703	3	COIL AND CORE COMPLETE for Ref.B	C-8025-40
262852	3a	COIL AND CORE COMPLETE for Ref.Ba	C-8025-40
262853	3b	COIL AND CORE COMPLETE for Ref.Bb	C-8025-40
	4	MACHINE SCREW NO.10-32 x 3/4 in. Fil.Hd.S. (Tin Pl.) with No.10 Plain S.Lock Washer (1/16 in. x 3/64 in.) (T.P.)	
27253	5	SEPARATOR	8072-254
232523	6	TOP PLATE	9999-1842
170571	7	NAME PLATE	8225-386
54936	8	RIVET	10301-50
	9	MACHINE SCREW, NO.10-32 x 3/8 in. Fil.Hd.S. (Tin Pl.) with No.10 S. Lock Washer (Internal Teeth) (Tin Pl.)	
	10	TERMINAL BLOCK COMPLETE with Nuts and Washers (Inc.1-10a, 8-11, 2-12, 2-13 and 4-14)	9968-
170363	10a	TERMINAL BLOCK COMPLETE with Terminal Posts	9968-1030
29102	11	WASHER	7828-139
	12	1/4 in. PLAIN S.LOCK WASHER (3/32 in. x 1/16 in.) (Tin Pl.)	
127260	13	NUT	8109-194
29101	14	NUT	8109-193
68929	15	EYELET	8064-471

UNION SWITCH & SIGNAL CO.

PIECE	REF.	DESCRIPTION	DWG. REF.
	16	MACHINE SCREW, NO.14-24 x 7/8 in. Fil.Hd.S. (Tin Pl.) with 1/4 in. Plain S.Lock Washer Ref.12 and Nut Ref.17	
93420	17	NUT	8265-128
148061	18	COIL NUT	10991-205
	19	TERMINAL BLOCK COMPLETE with Nuts and Washers (Inc.1-19a, 4-11 and 4-14)	
120024	19a	TERMINAL BLOCK WITH TERMINAL POSTS (Inc.2-11 and 2-13)	9968-1024
	20	RESISTANCE UNIT ONLY, for Refs.D to Dq (Orders should specify resistance desired)	9065-309
	21	TERMINAL BLOCK COMPLETE with Nuts and Washers (Inc.1-21a, 6-11, 2-13 and 4-14)	9968-
206754	21a	TERMINAL BLOCK with Terminal Posts (Inc.2-11 and 2-13)	9968-1206
	22	RESISTANCE UNIT ONLY for Refs.E to Eh (Orders should specify resistance desired)	9065-227
263611	23	RESISTOR UNIT ONLY for Ref.F (0.1 Ohm)	9065-123
236946	23a	RESISTOR UNIT ONLY for Ref.Fa (0.20 Ohm)	9065-123
144910	24	RESISTANCE UNIT, 5-Ohms total resistance, 1.1 Amp.Capacity	9065-186
	25	TERMINAL BLOCK WITH NUTS AND WASHERS (Inc.1-25a, 6-11, 2-13, and 4-14)	9968-
153697	25a	TERMINAL BLOCK WITH TERMINAL POSTS (Inc.2-11 and 2-13)	9968-625

PLATE W-75

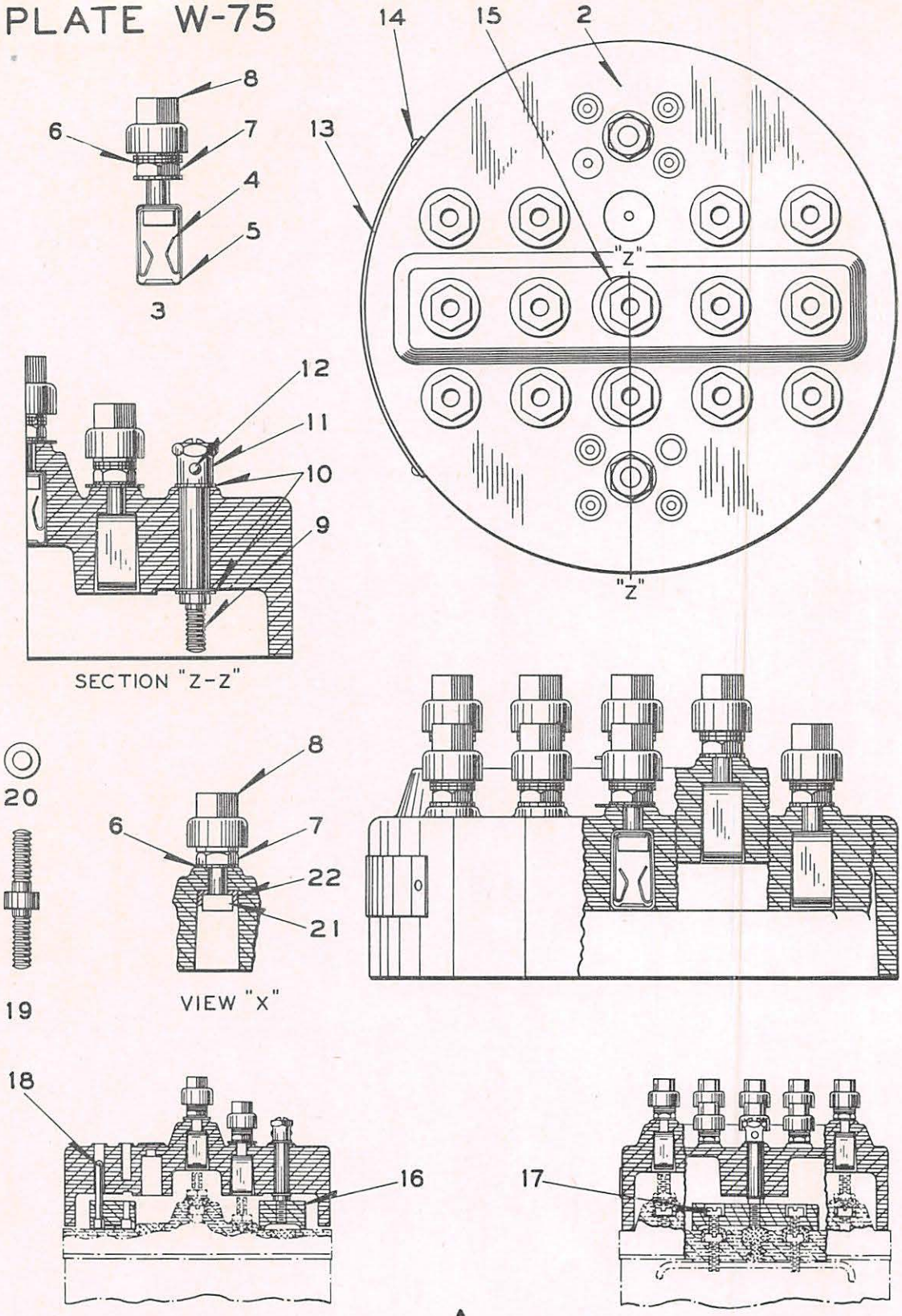

A

PLUG COUPLER

2·2·42

UNION SWITCH & SIGNAL CO.

PLUG COUPLERS

Order by Plate, Piece, Reference and Abbreviated Description

PLUG COUPLER COMPLETE WITH CLAMPING PIECES, NUTS AND INDEXING PINS					
PIECE	REF.	PLUG COUPLER ARRANGED FOR	PLATE	REMARKS	DWG.REF.
219549	A	(2F-2B) 75 Code Transmitter	W-8		C-16765-2
219539	Aa	(4F-4B) 75 Code Transmitter	W-8		C-16765-2
219551	Ab	(2F-2B) 120 Code Transmitter	W-9 & W-9A		C-16765-2
219541	Ac	(4F-4B) 120 Code Transmitter	W-9 & W-9A		C-16765-2
219553	Ad	(2F-2B) 180 Code Transmitter	W-9 & W-9A		C-16765-2
219543	Ae	(4F-4B) 180 Code Transmitter	W-9 & W-9A		C-16765-2
219555	Af	(2F-2B) CD Relay	W-20, W-21 & W-22		C-16765-2
219545	Ag	(4F-4B) CD Relay	W-22		C-16765-2
219557	Ah	(2F-2B) CND Relay	W-24		C-16765-2
219547	Aj	(4F-4B) CND Relay	W-24		C-16765-2
219559	Ak	(2F-2B) CDM Code Converter	W-18		C-16765-2
223506	Am	(4N-4R) CDP Relay	W-24B		C-16765-2
223508	An	(2N-2R) CDP Relay	W-24B		C-16765-2
225710	Ap	(4F-4B) Tuned Alternator Repeater	W-17	Center Terminal Post Hole plugged per View 'X'	C-16765-2
259895	Aq	(2F-2B) P-10 Relay	W-44E	For relays having double winding coil, 12 volts second winding. Center Terminal post hole plugged per View 'X'	C-16765-2
259897	Ar	(2F-2B) P-10 Relay	W-44E	For relays having double winding coil, 2 volts second winding. Center Terminal post hole plugged per View 'X'	C-16765-2

UNION SWITCH & SIGNAL CO.

PLUG COUPLER COMPLETE WITH CLAMPING PIECES, NUTS AND INDEXING PINS (cont'd.)

PIECE	REF.	PLUG COUPLER ARRANGED FOR	PLATE	REMARKS	DWG.REF.
262763	As	(2F-2B) P-10 Relay	W-44E	For relays having single winding coil. Center Terminal post hole plugged per View 'X'	C-16765-2

PIECE	REF.	DESCRIPTION	DWG.REF.
219532	2	PLUG COUPLER BODY ONLY	C-16766-1
	3	TERMINAL POST WITH NUTS, WASHERS, CONTACT SPRING AND RECEPTACLE (Inc.1-3a, 2-4, 1-5, 3-6, 2-7 and 1-8)	12451-
122489	3a	TERMINAL POST ONLY	8094-1192
216193	4	CONTACT SPRING	8385-2631
216192	5	RECEPTACLE	11893-883
29102	6	WASHER	7828-139
127260	7	NUT	8109-194
105713	8	INSULATED NUT	12770-1
219533	9	SCREW	8190-300
216197	10	WASHER	7828-401
108876	11	SLEEVE	8350-946
54921	12	RIVET	10301-1
219535	13	NAME PLATE (Orders should specify marking desired)	8225-565
	14	SCREW, NO.4-40 x 1/4 in. Rd.Hd. (Tin Pl.)	
142777	15	TAG (Orders should specify marking desired)	8988-75
219280	16	CLAMPING PIECE	12770-24
72948	17	NUT	8109-383
219536	18	INDEXING PIN	8097-722
219560	19	STUD (Used to replace No.14-24 x 3/4 in. Fil.Hd.S. Machine Screw on Relays not arranged for Plug Coupler, if desired orders should so state).	8114-972
38448	20	WASHER (Used with Ref.19)	7826-98
	21	TERMINAL POST WITH NUTS AND WASHERS (Inc.1-21a, 1-6, 2-7, 1-8, and 1-22) Used as dummy post in center hole when springs are not required)	12451-
141688	21a	TERMINAL POST ONLY	8094-1192
188259	22	LOCK WASHER	8486-310

PLATE W-75A

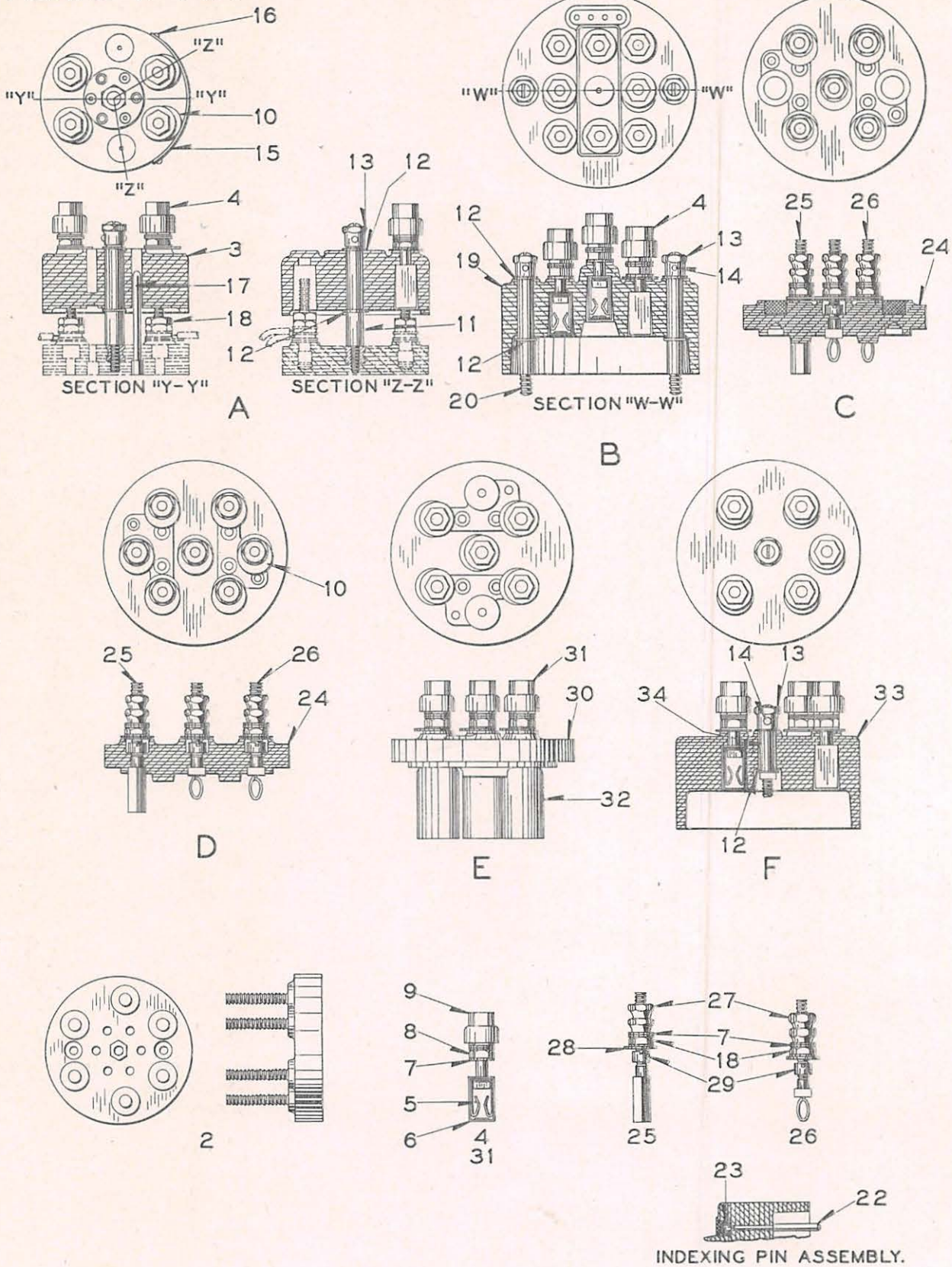

11-25-46

PLUG COUPLERS

UNION SWITCH & SIGNAL CO.

PLUG COUPLERS FOR "P-4" RELAYS AND DECODING UNITS

Order by Plate, Piece, Reference and Abbreviated Description

PLUG COUPLER COMPLETE WITH INDEXING PINS AND NUTS					
PIECE	REF.	PLUG COUPLER ARRANGED FOR	PLATE	REMARKS	DWG.REF.
219564	A	(120 Code) Decoding Unit	W-55		C-16765-4
219566	Aa	(180 Code) Decoding Unit	W-55		C-16765-4
228523	Ab	(75M Code) Decoding Unit	W-55		C-16765-4
219983	B	(2F-2B) P-4 Relay	W-44A (Refs.Aa, Ab, Ac, Ad & Ah)	Polar Bias	C-16765-6
220213	Ba	(2F-2B) P-4 Relay	W-44A (Ref. A, Ak & Am)	Polar Stick	C-16765-6
224433	Bb	(2F-2B) P-4 Relay	W-44A (Ref.Ae)	Polar Stick	C-16765-6
224435	Bc	(2F-2B) P-4 Relay	W-44A (Ref.Af)	Polar Bias	C-16765-6
226354	Bd	(2F-2B) P-4 Relay	W-44A (Ref.Aj)	Polar Bias	C-16765-6
250570	C	(1F-1B) P-4 Relay	W-44-1 (Refs.C, Ca, Cb, Cc, Cd & Ce)		C-16642-7
220730	D	(1F-1B) P-4 Relay	W-44-1 (Refs.D, Da, Db & Dc)		C-16642-7
237160	E	(1F-1B) P-4 Relay	W-44-1 (Refs.A, Aa, Ab, Ac & Ad)		C-16765-7
237161	Ea	(1F-1B) P-4 Relay	W-44-1 (Refs.B, Ba, Bb, Bc, Bd & Be)		C-16765-7
264852	F	(1F-1B) P-4 Relay	W-44-1 (Ref.E)		C-16765-8

PIECE	REF.	DESCRIPTION	DWG.REF.
216611	2	6-WAY TERMINAL BOARD (For original Decoding Units not arranged for Plug Coupler).....	9968-1269
219561	3	PLUG COUPLER BODY ONLY (Orders should specify Decoding Unit with which it is to be used so proper holes can be drilled through).....	C-16766-2
	4	TERMINAL POST WITH NUTS, WASHERS, CONTACT SPRINGS AND RECEPTACLE (Inc.1-4a, 2-5, 1-6, 3-7, 2-8 and 1-9).....	12451-

UNION SWITCH & SIGNAL CO.

PIECE	REF.	DESCRIPTION	DWG. REF.
122489	4a	TERMINAL POST ONLY	8094-1192
216193	5	CONTACT SPRING	8385-2631
216192	6	RECEPTACLE	11893-883
29102	7	WASHER	7828-139
127260	8	NUT	8109-194
105713	9	INSULATED NUT	12770-1
142777	10	TAG (Orders should specify marking desired)	8988-75
219534	11	SCREW	8190-300
216197	12	WASHER	7828-401
108876	13	SLEEVE	8350-946
54921	14	RIVET	10301-1
219562	15	NAME PLATE (Orders should specify marking desired)	8225-566
	16	SCREW, NO.4-40 x 1/4 in. Rd.Hd. (Tin Pl.)	
219537	17	INDEXING PIN	8097-722
29103	18	NUT	8109-194
219979	19	PLUG COUPLER BODY ONLY (Orders should specify Relay with which it is to be used so proper holes can be drilled through)	C-16766-3
219981	20	SCREW	8190-300
219982	22	INDEXING PIN	8097-767
104618	23	NUT	8109-497
107078	24	TOP PLATE	C-16642-5
	25	TERMINAL POST WITH NUTS AND WASHERS (Inc.1-25a, 3-7, 1-18, 2-27, 1-28 and 1-29)	12451-
107891	25a	TERMINAL POST ONLY, for Ref.25	8094-2401
	26	TERMINAL POST WITH NUTS AND WASHERS (Inc.1-26a, 3-7, 1-18, 2-27, 1-28 and 1-29)	12451-
107197	26a	TERMINAL POST ONLY, for Ref.26	8094-2399
29101	27	NUT	8109-193
69705	28	WASHER	7828-287
69706	29	NUT	8109-383
237163	30	PLUG COUPLER PLATE (5-Way)	C-16642-5
237164	30a	PLUG COUPLER PLATE (7-Way)	C-16642-5

UNION SWITCH & SIGNAL CO.

PIECE	REF.	DESCRIPTION	DWG. REF.
	31	TERMINAL POST WITH NUTS, WASHERS, CONTACT SPRINGS AND RECEPTACLE (Inc.1-31a, 2-5, 1-6, 3-7, 2-8, 1-9 and 1-28).....	12451-
130593	31a	TERMINAL POST ONLY, for Ref.31.....	8094-1192
237162	32	PLUG COUPLER BODY.....	12770-48
264934	33	PLUG COUPLER BODY.....	C-16766-4
264835	34	SCREW.....	8190-300

11-25-46

PLATE W-77

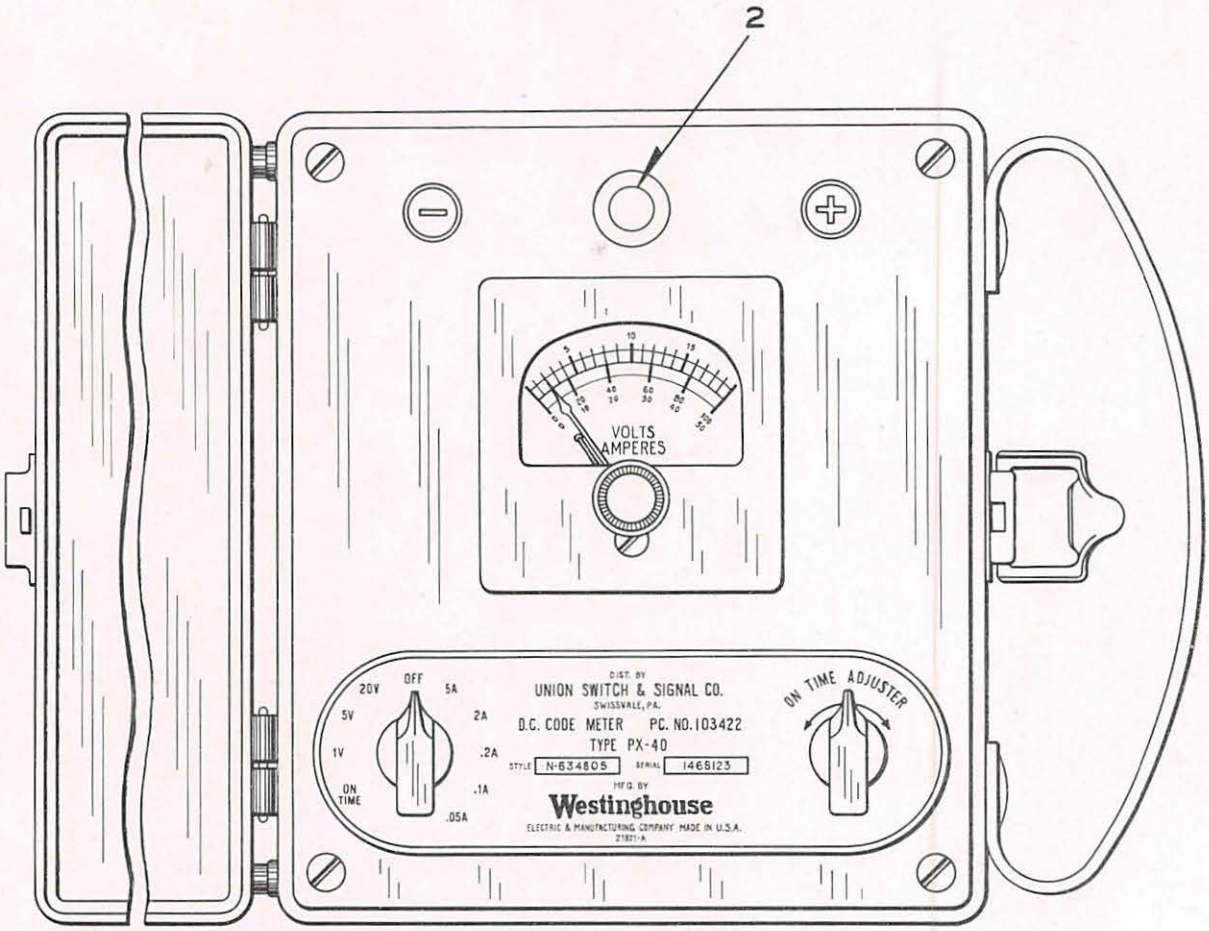

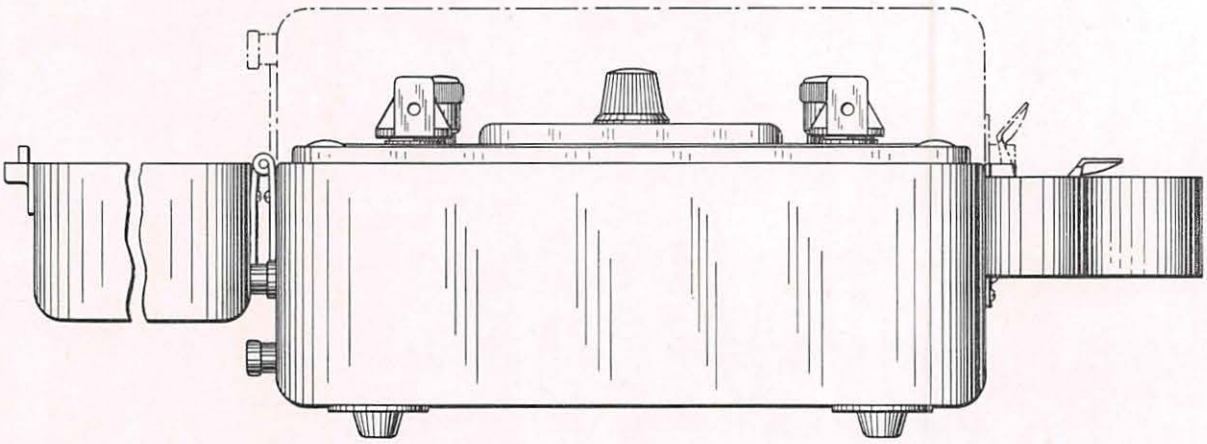

A

CODE METER

2-2-42

UNION SWITCH & SIGNAL CO.

CODED TRACK CIRCUIT CONTROL SYSTEM
METERS AND TEST EQUIPMENT

Order by Plate, Piece, Reference and Abbreviated Description

PIECE	REF.	DESCRIPTION	DWG. REF.
103422	A	CODE METER COMPLETE.....	C-9021-2
	2	FUSE (C.N. 71167)	

11-25-46

PLATE W-80

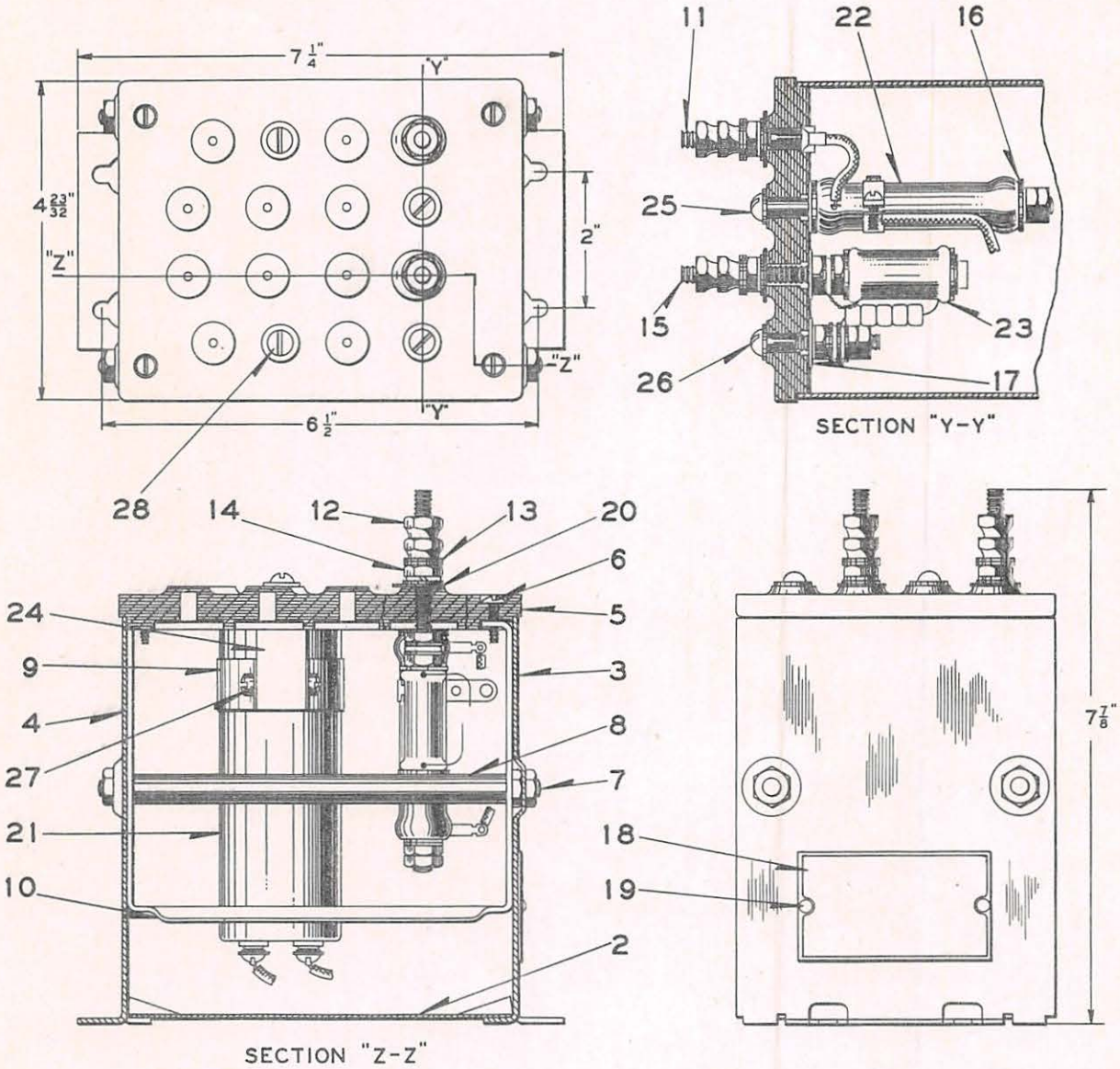

A

TIMING UNIT

2-2-42

UNION SWITCH & SIGNAL CO.

CODED TRACK CIRCUIT CONTROL SYSTEM

TIMING UNIT

Order by Plate, Piece, Reference and Abbreviated Description Given in Heavy Face Type Only

PIECE	REF.	DESCRIPTION	DWG. REF.
225324	A	TIMING UNIT FOR 5-INDICATION CODE TRACK CIRCUIT SYSTEM.....	C-16743-7
106994	2	COVER.....	C-16724-2
106993	3	END PLATE.....	C-16724-1
106992	4	END PLATE.....	C-16724-1
107001	5	TERMINAL BOARD.....	C-16724-7
	6	SCREW, NO.8 x 5/8" Rd.Hd.Hardened (Tin Pl.)	
	7	STUD, Ref.7a, with four Nuts Ref.14.....	12471-
213848	7a	STUD ONLY.....	8098-1097
217222	8	BUSHING.....	B-10272-1
232005	9	BRACKET.....	10914-1373
106999	10	SUPPORT.....	10914-1033
	11	TERMINAL POST with Nuts and Washers (Inc.1-11a, 2-12, 3-13, 1-14 and one 1/4" Pl.S.Lock Washer (3/32" x 1/16") (Tin Pl.)..	12451-
115706	11a	TERMINAL POST ONLY.....	8094-1192
29101	12	NUT.....	8109-193
29102	13	WASHER.....	7828-139
29103	14	NUT.....	8109-194
	15	TERMINAL POST with Nuts and Washers (Inc.1-15a, 2-12, 6-13, 3-14, 2-16, 1-17 and one 1/4" Pl.S.Lock Washer (3/32" x 1/16") (Tin Pl.).....	12451-
189076	15a	TERMINAL POST ONLY.....	8094-1192
78530	16	INS.WASHER.....	8078-1092
2615	17	WASHER.....	7828-10
225321	18	NAME PLATE.....	8225-588
54920	19	RIVET.....	10301-1
142777	20	TAG (Orders should specify marking desired).....	8988-75
232047	21	CONDENSER, 2000 MFD., 20V.....	B-12549-45
C.N.73800	22	RESISTOR, 15000-Ohms	
232007	23	RESISTOR, 25-Ohms.....	9065-245
232003	24	BLOCK.....	8072-918

UNION SWITCH & SIGNAL CO.

PIECE	REF.	DESCRIPTION	DWG. REF.
	25	MACHINE SCREW, Ref.25a, with Nuts and Washers (Inc.1-25a, 2-13, 2-14,2-16 and 1-17).....	12471-
	25a	MACHINE SCREW, NO.14-24 x 4-1/4" Rd.Hd.Br. (N.P.)	
	26	MACHINE SCREW, Ref.26a, with Nuts and Washers (Inc.1-26a,4-13, 3-14, 1-17 and one 1/4" Pl.S.Lock Washer (3/32" x 1/16") (Tin Pl.)	
	26a	MACHINE SCREW, NO.14-24 x 1-3/4" Rd.Hd.Br. (N.P.)	
	27	MACHINE SCREW, NO.10-30 x 3/8" Fil.Hd.S. (Tin Pl.)	
	28	MACHINE SCREW, NO.14-24 x 1" Rd.Hd.Br. (N.P.)	

2-2-42

PLATE W-80A

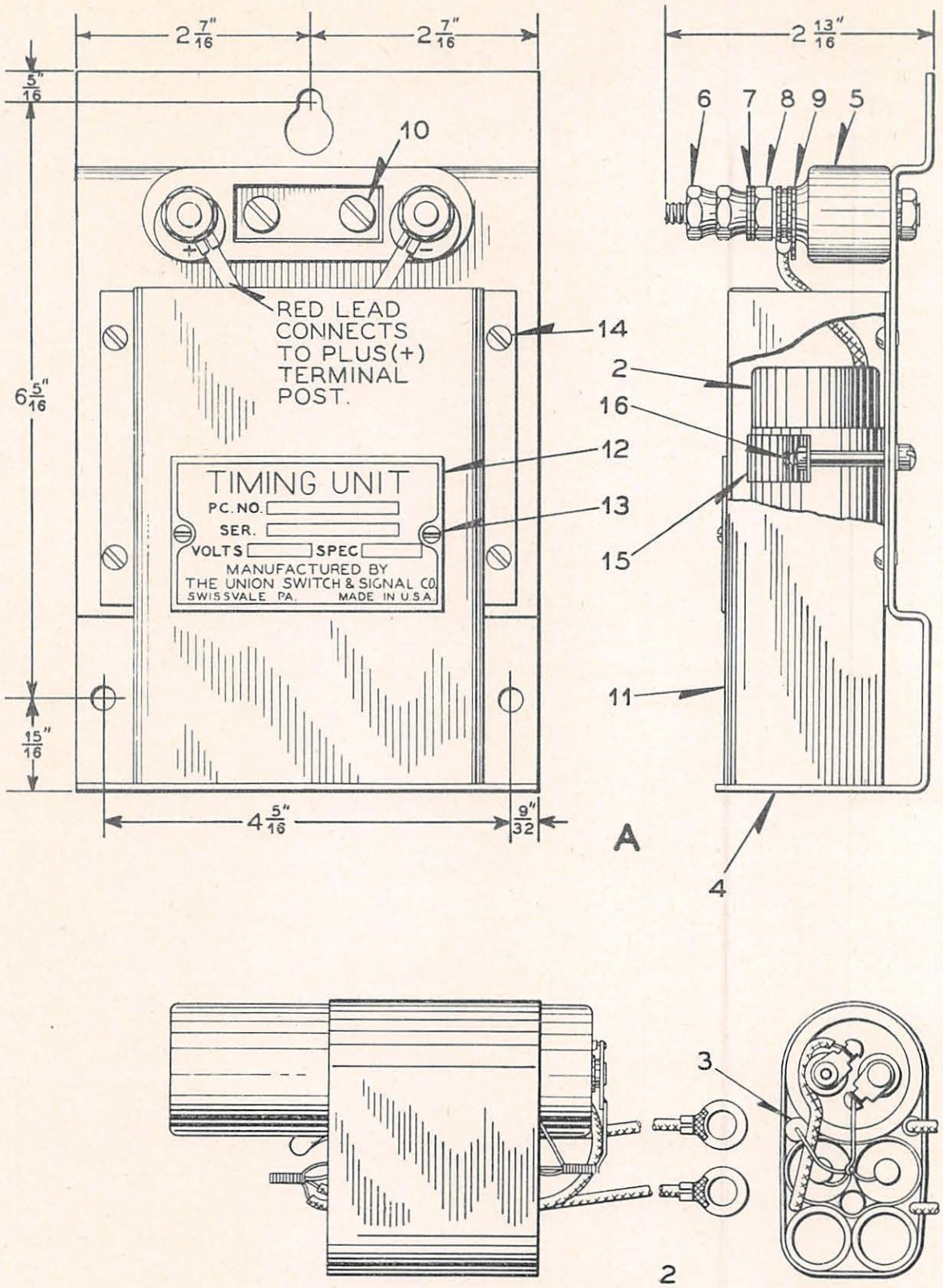

TIMING UNIT

UNION SWITCH & SIGNAL CO.

TIMING UNIT

Order by Plate, Piece, Reference and Abbreviated Description Given in Heavy Face Type Only

PIECE	REF.	DESCRIPTION	DWG. REF.
251785	A	TIMING UNIT COMPLETE, 1500 Microfarad	C-16743-35
251799	2	REPLACEMENT CONDENSER PACK. Consisting of main and trimming condensers and 20 Ohm resistor. Condensers selected during manufacture to provide a capacity between tolerances of 1350 and 1500 microfarads	C-16745-23
276056	3	RESISTOR COMPLETE, 20-Ohms	9065-375
251802	4	BASE PLATE	10914-1216
	5	TERMINAL BLOCK COMPLETE with Nuts and Washers (Inc.1-5a, 4-6, 8-7, 2-8 and two 1/4" Pl.S.Lock Washers (M) (Tin Pl.)	9968-
170363	5a	TERMINAL BLOCK without Nuts and Washers	9968-1030
29101	6	NUT	8109-193
29102	7	WASHER	7828-139
127260	8	NUT	8109-194
142777	9	TAG (Orders should specify marking desired)	8988-75
	10	MACHINE SCREW, No.14-24 x 7/8" Fil.Hd.S. (Tin Pl.) with 1/4" Pl.S. Lock Washer (M) (Tin Pl.) and Nut Ref.10a	
93420	10a	NUT	8265-128
251798	11	COVER	C-16745-22
225321	12	NAME PLATE	8225-588
C.N.52644	13	DRIVE SCREW, No.2 x 3/16" Rd.Hd.(Tin Pl.)	
	14	MACHINE SCREW, No.6-40 x 1/8" Rd.Hd.Br. (N.P.)	
251796	15	CONDENSER CLAMP	10914-1745
	16	MACHINE SCREW, No.6-40 x 1-1/4" Fil.Hd.S. (Tin Pl.) with No.6 Shakeproof Lock Washer (Int.Teeth) (Tin Pl.) and Nut Ref.16a	
30456	16a	NUT	8109-212